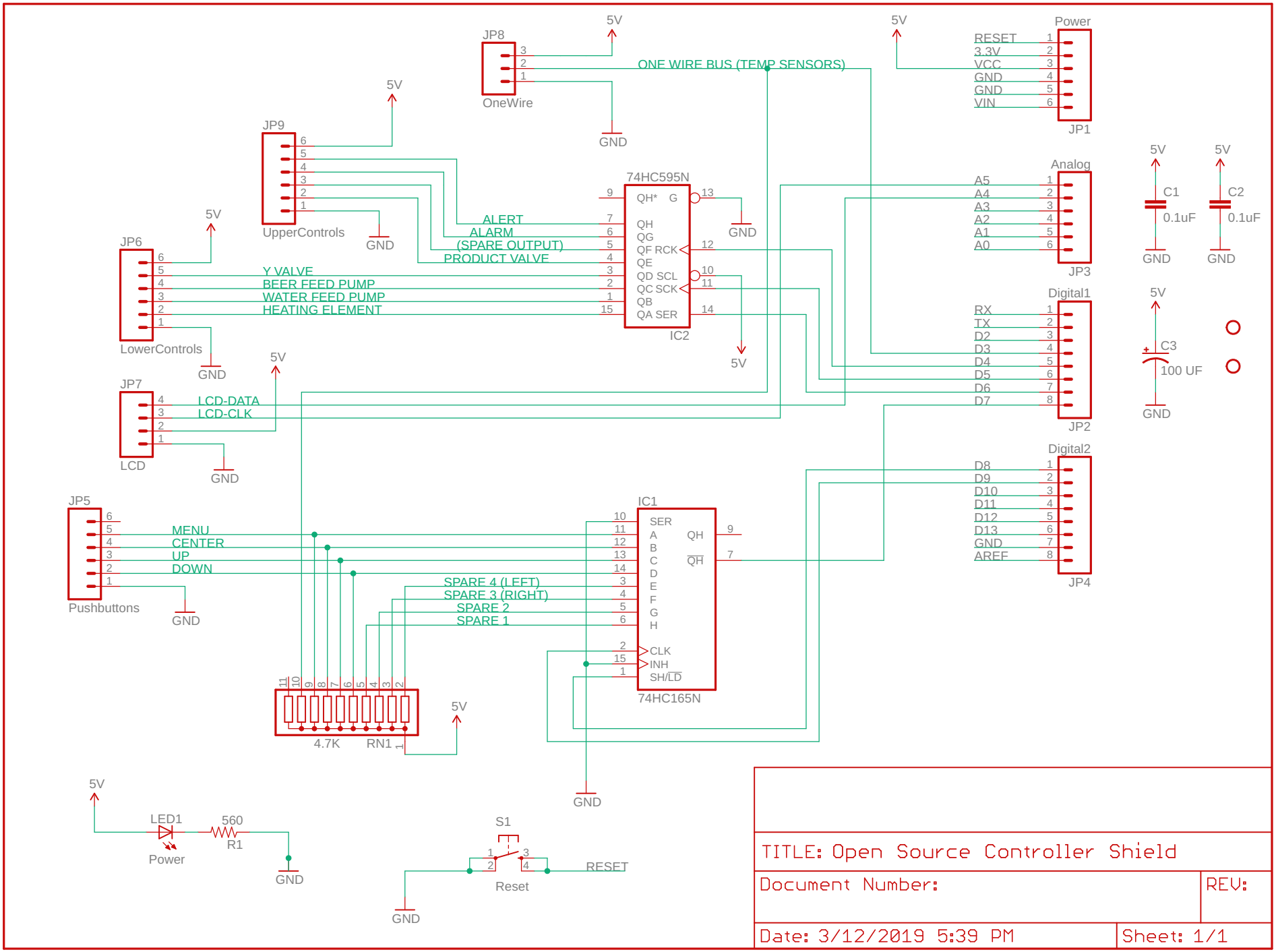
JP8
OneWire
5V
GND
ONE WIRE BUS (TEMP SENSORS)
JP9
UpperControls
ALERT
ALARM
(SPARE OUTPUT)
PRODUCT VALVE
74HC595N
IC2
QH* G
QH
QG
QF RCK
QE
QD SCL
QC SCK
QB
QA SER
JP6
LowerControls
Y VALVE
BEER FEED PUMP
WATER FEED PUMP
HEATING ELEMENT
JP7
LCD
LCD-DATA
LCD-CLK
JP5
Pushbuttons
MENU
CENTER
UP
DOWN
SPARE 4 (LEFT)
SPARE 3 (RIGHT)
SPARE 2
SPARE 1
IC1
74HC165N
SER
A
B
C
D
E
F
G
H
QH
QH
CLK
INH
SH/LD
4.7K
RN1
LED1
Power
560
R1
S1
Reset
RESET
Power
RESET
3.3V
VCC
GND
GND
VIN
JP1
Analog
A5
A4
A3
A2
A1
A0
JP3
C1
0.1uF
C2
0.1uF
Digital1
RX
TX
D2
D3
D4
D5
D6
D7
JP2
C3
100 UF
Digital2
D8
D9
D10
D11
D12
D13
GND
AREF
JP4
TITLE: Open Source Controller Shield
Document Number:
REV:
Date: 3/12/2019 5:39 PM
Sheet: 1/1