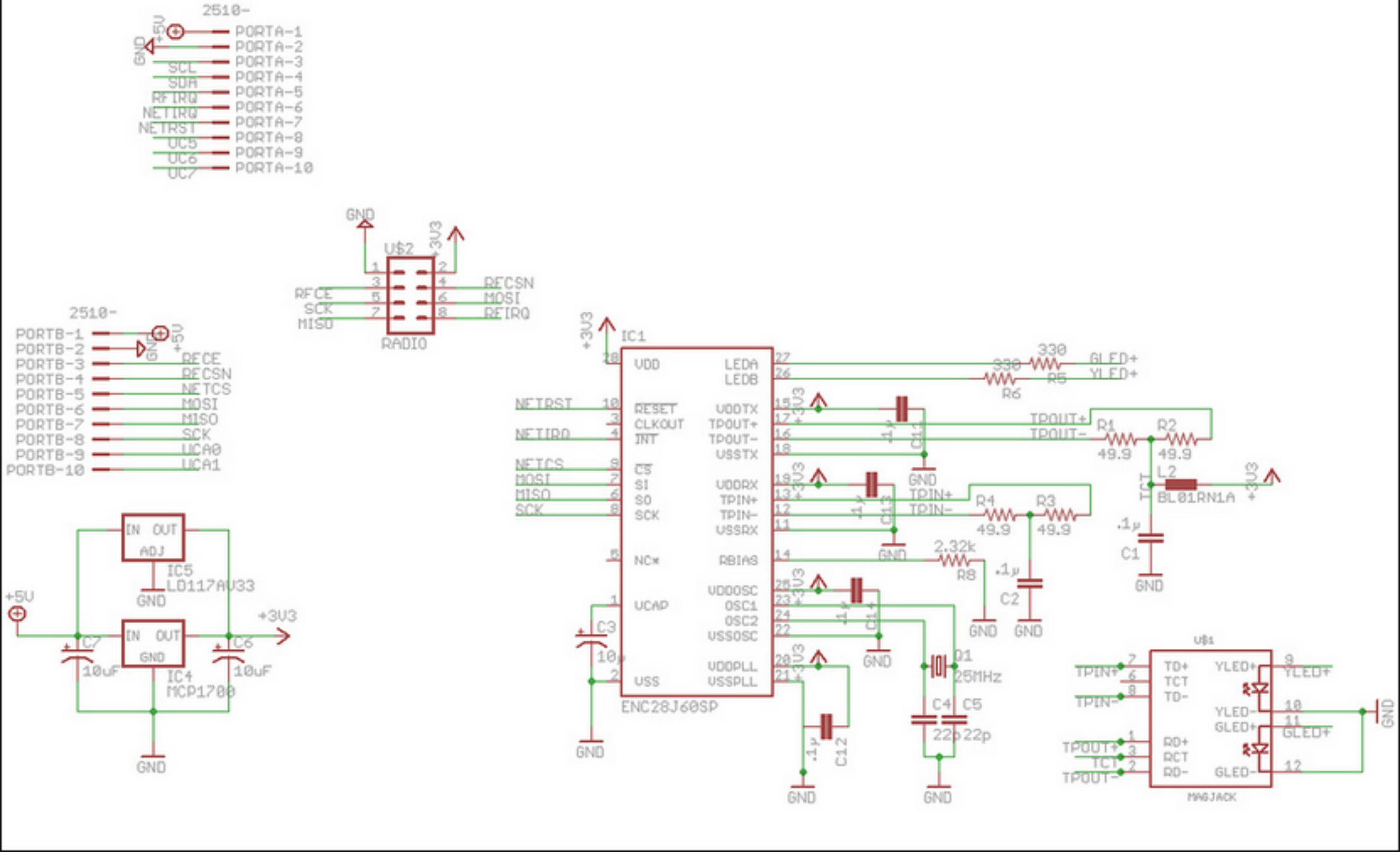
2510-
+5V
GND
PORTA-1
PORTA-2
PORTA-3
PORTA-4
PORTA-5
PORTA-6
PORTA-7
PORTA-8
PORTA-9
PORTA-10
SCL
SDA
RFIRQ
NETIRQ
NETRST
UC5
UC6
UC7
U$2
3V3
RFCE
SCK
MISO
RFCSN
MOSI
RFIRQ
RADIO
2510-
PORTB-1
PORTB-2
PORTB-3
PORTB-4
PORTB-5
PORTB-6
PORTB-7
PORTB-8
PORTB-9
PORTB-10
RFCE
RFCSN
NETCS
MOSI
MISO
SCK
UCA0
UCA1
IN OUT
ADJ
IC5
LD117AV33
IN OUT
GND
IC4
MCP1700
C7
10uF
C6
10uF
+3V3
IC1
VDD
RESET
CLKOUT
INT
CS
SI
SO
SCK
NC*
UCAP
USS
LEDA
LEDB
VDDTX
TPOUT+
TPOUT-
VSSTX
VDDRX
TPIN+
TPIN-
VSSRX
RBIAS
VDDOSC
OSC1
OSC2
VSSOSC
VDDPLL
VSSPLL
ENC28J60SP
NETRST
NETIRQ
NETCS
MOSI
MISO
SCK
C3
10µ
C11
C12
C13
C14
C15
C16
Q1
25MHz
C4
C5
22p
22p
330
R5
330
R6
GLED+
YLED+
TPOUT+
TPOUT-
R1
49.9
R2
49.9
L2
BL01RN1A
TCT
.1µ
C1
TPIN+
TPIN-
R4
49.9
R3
49.9
2.32k
R8
.1µ
C2
U$1
TD+
TCT
TD-
RD+
RCT
RD-
YLED+
YLED-
GLED+
GLED-
MAGJACK