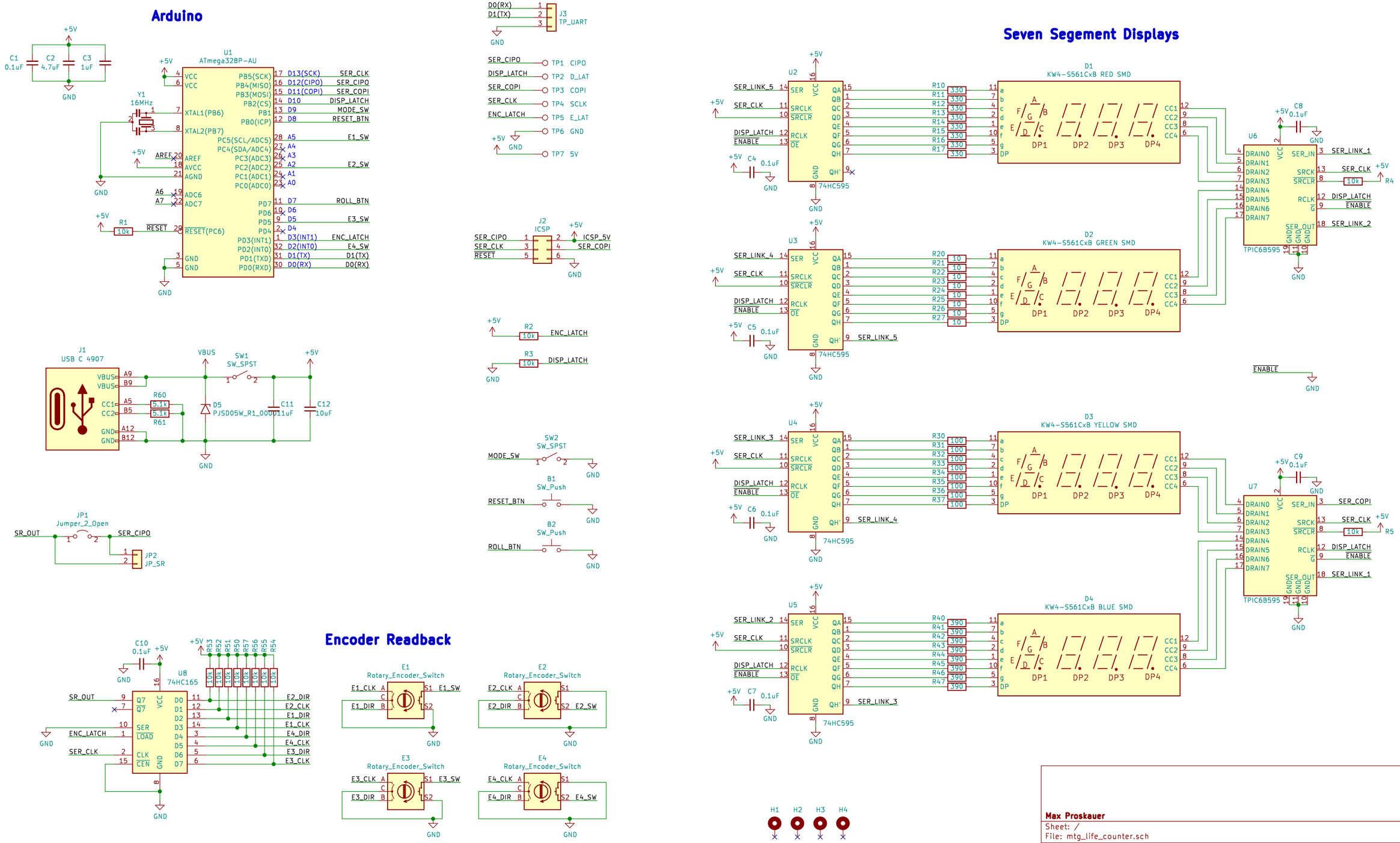

Max Proskauer

Sheet: /

File: mtg_life_counter.sch

Title: Magic: The Gathering Life Counter

Size: USLedger	Date: 2021-02-10	Rev: 2.0
KiCad E.D.A. kicad (5.1.4)-1		Id: 1/1