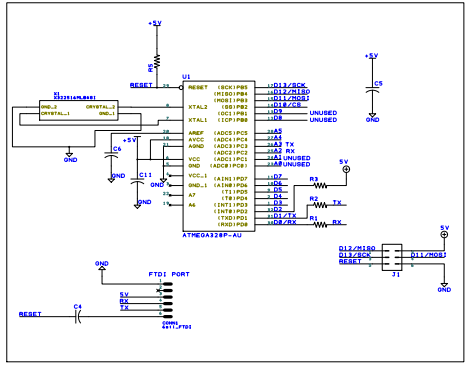

MICROCONTROLLER

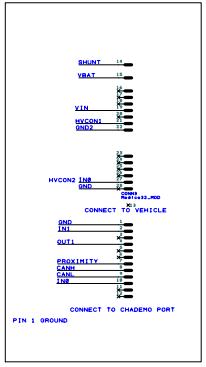

ModICE

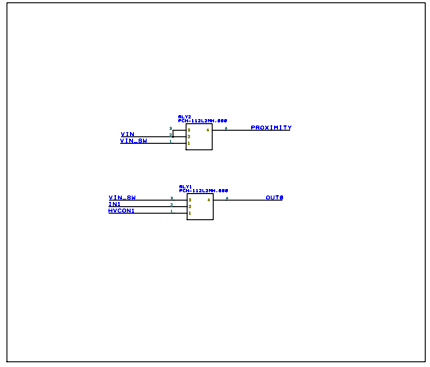

RELAYS

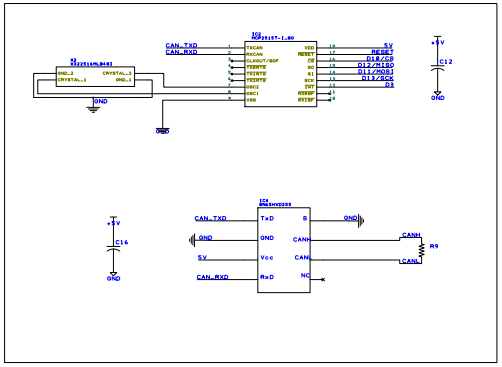

CANBUS

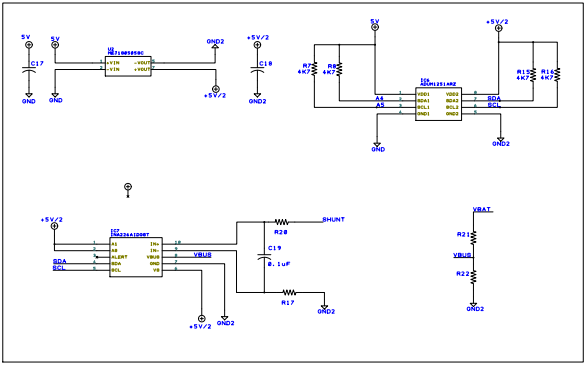

SHUNT INTERFACE

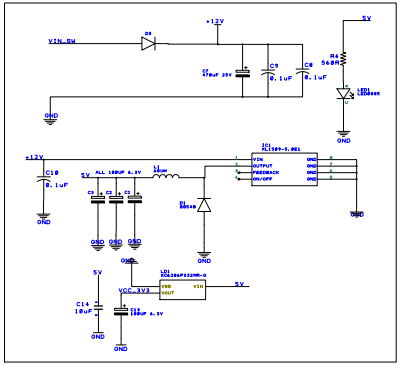

POWER SUPPLY

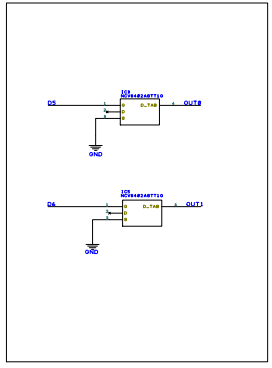

DIGITAL OUTPUTS

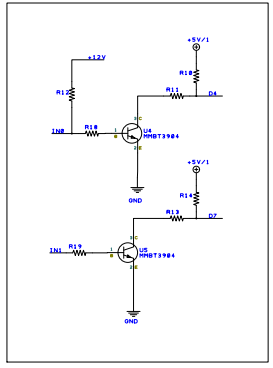

DIGITAL INPUTS

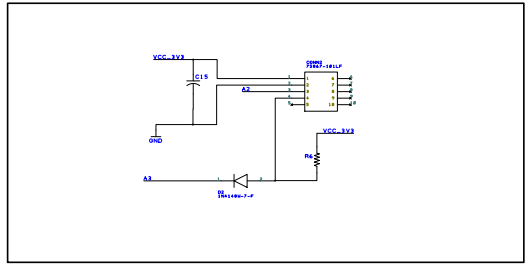

ESP WiFi MODULE