# Tommaso **Bocchietti**


**Mechanical Engineer | MSc Mechatronics & Robotics (Dec 2025)**

*Gilching, Munich Metropolitan Area (DE)*

tommaso.bocchietti@gmail.com | (+39) 342-501-6560 | bocchio.dev | Bocchio01 | tommaso-bocchietti


*"Innovation through hands-on engineering"*

Enthusiastic Mechanical Engineer passionate about model-based design, control theory, and embedded systems.
Driven by curiosity and hands-on experience, with a constant focus on optimizing existing solutions and designing what has yet to be imagined. Seeking opportunities in dynamic environments spanning robotics, aerospace systems, and embedded development, where mechatronic solutions and intelligent control systems push the boundaries of innovation.

## Experience

### Deutsches Zentrum für Luft- und Raumfahrt e.V. (DLR)
*Oberpfaffenhofen, Munich (DE)*

Master Thesis Student — *Apr 2025 - Dec 2025*

- Implemented a **regrasping framework** enabling robots to plan multi-stage manipulation tasks also involving multi-modal grasp strategies.
- Developed a full digital twin of the workspace in **PyBullet** and validated the framework in simulation before deploying it on a **DLR-LWR** equipped with a **DLR-HCG** gripper.
- Currently conducting experimental validation of the framework on real hardware.

### PoliMi Sailing Team
*Politecnico di Milano, Milan (IT)*

Mechatronic Engineer — *Oct 2023 - Oct 2024*

- Architected a **lightweight NMEA0183 parser in C/C++**, optimizing memory usage for reliable marine sensor data processing.
- Developed production-grade firmware for **STM32** and **ESP32** nodes, managing distributed actuation via **CAN bus**.
- Engineering contributions secured the Overall Win at the 2024 "SuMoth" competition (1st of 11 international teams).

### Orienteering Como
*Lombardy (IT)*

Mapper — *Feb 2018 – Present*

- Produced Orienteering maps compliant with the **IOF International Map Specification**, ensuring high **accuracy and readability**.
- Oversaw map homologation with the Italian Orienteering Federation.
- Maintained the society's cartography archive.

### Self-Employed
*Online & Como (IT)*

Private Tutor — *Feb 2018 – Present*

- Provided one-on-one tutoring in **Math**, **Physics**, and **Computer Science** to students aged 14-19.
- Specialized in helping students overcome conceptual difficulties and build strong foundational understanding.

### RIMAC Automobili
*Milan (IT) & Zagreb (HR)*

Mechanical Engineer Intern — *Mar 2023 – Jun 2023*

- Designed a **novel electric personal transportation vehicle** concept aligned with RIMAC's vision for sustainable urban mobility.
- Developed detailed 3D CAD models in **OnShape** and performed preliminary **FEA** simulations to validate structural integrity.
- Worked within an international, multidisciplinary team of 10 students from European universities.
- Project ranked **best among four teams** by RIMAC engineers during the "ProHacking 2023" program.

### Confedilizia Como
*Como (IT)*

Software Developer — *Apr 2020 – Feb 2021*

- Developed a custom **Excel-based** software tool for managing real estate properties.
- Built a secure **PHP + MySQL** web platform for client access, licensing, and distribution.

### Ennova Research
*ComoNExT, Como (IT)*

Web Programmer Intern — *Jun 2018*

- Completed an internship as part of the national "Alternanza Scuola-Lavoro" program.
- Developed a dynamically generated web page using **Node.js**.

# Education

### Politecnico di Milano
*Milan (IT)*

MSc in Mechanical Engineering (Mechatronics and Robotics) — *Sep 2023 – Dec 2025 (expected)*

- Current GPA: 29.35/30
- Relevant coursework: Mechatronic Systems A, Lab-Mechatronics, Feedback Control Systems, Nonlinear Control, Advanced Dynamics, Autonomous Vehicles, Machine Learning, Data Analysis, Topology Optimisation, Actuating Devices
- Scholarships: Politecnico di Milano Merit-based Scholarship (2023/2025)

### University of Waterloo
*Waterloo (CA)*

MSc in Mechanical Engineering (Erasmus+ Exchange) — *Jan 2024 – Apr 2024*

- Exchange focused on advanced computational methods and materials science.
- Courses: Advanced Finite Element Methods, Computational Fluid Dynamics, Materials for Nano and MEMS

### Politecnico di Milano
*Milan (IT)*

BSc in Mechanical Engineering — *Sep 2020 – Jul 2023*

- Relevant coursework: Mechanics of Vibrations, Numerical Methods, Structural Mechanics, Fluid Mechanics, Thermodynamics, Fluid Machines
- Scholarships: Politecnico di Milano Merit-based Scholarship (2021/2023), Best Freshman Award (2021)
- Selected for: Pro Hackin' Project 2023; SWERC 2021 (competitive programming team); 3rd place in a MATLAB coding competition

### Liceo Scientifico "Paolo Giovio"
*Como (IT)*

High School Diploma (Applied Sciences) — *Sep 2015 – Jun 2020*

- Olympiads: Physics (regional qualification, 2019), Computer Science (regional qualification, 2018-2019), Maths (district selection, 2017)

# Technical Skills

| | |
|---|---|
| **Robotics** | ROS, MATLAB/Simulink, Model-Based Design, Feedback Control Systems |
| **Embedded** | STM32, ESP32, Raspberry Pi, Arduino, Sensors & Actuators |
| **Mechanical** | CATIA V5, SolidWorks, COMSOL, Inventor |
| **Software** | C/C++, Python, Java, Web Stack (JS, PHP, MySQL) |
| **Tools** | Git, CI/CD, Latex, Linux, Windows |

# Languages

| | |
|---|---|
| **Italian** | Native |
| **English** | C1 / Advanced |
| **French** | A1 / Beginner |
| **German** | A1 / Beginner (Early level) |

# Extracurricular Activity

### Italian Orienteering Committee
*Italy*

IT Technician — *Nov 2018 – Present*

- Provided IT support and organizational assistance at major national Orienteering events.
- Notable events: 5 Days of Italy (Jul 2022), International Meeting of Venice (Nov 2018 – Present).

### Orienteering Como
*Lombardy / Como (IT)*

Active Member, Council Member, Events Organizer & Instructor — *Jan 2017 – Present*

- Active member since Feb 2016; elected to council in Sep 2021.
- Led educational and promotional outings for schools and local associations.
- Organized regional and promotional competitions as course-setter, controller, or IT support.
- Competed in over 200 events, including national championships and international competitions.

### Tennis Como
*Como (IT)*

Ball Boy — *2012 – 2014*

- Supported the organization of the annual ATP Challenger tournament in Como.
- Served as ball boy for three consecutive years (2012–2014).

# Honors & Awards

| | | |
|---|---|---|
| 2021/2025 | **Merit Exemption Scholarship**, Awarded to top students based on GPA | *Politecnico di Milano, Milan (IT)* |
| 2021 | **Best Freshman Award**, Recognized among the top freshmen based on GPA | *Politecnico di Milano, Milan (IT)* |

# Presentations

### Online Webinar, F.I.M.A.A Como
*Online*

Presenter — <CONTRATTI A CANONE CONCORDATO> — *16 Feb 2021*

- Presented the value of a computerized system to efficiently generate and manage real estate lease contracts in compliance with local regulations.
- Demonstrated the custom application developed for Confedilizia Como as a practical solution for legal compliance.

## Certifications

| | |
|---|---|
| **Arduino 90/100** | Official Arduino certification, obtained on 17.04.2024 |
| **TOEFL 90/120** | Test of English as a Foreign Language, obtained on 23.08.2023 |
| **TOEIC 975/990** | Test of English for International Communication, obtained on 12.07.2023 |

## Personal Interests & Adventures

For the past 9 years, I've been practicing orienteering, a sport that demands map reading, physical effort, and fast decision-making. I've also done some bikepacking trips, covering routes like Como-London (1200km+), Como-Barcelona (1100km+), Como-Roma (750km+) and Munich-Como (400km+). These self-supported adventures showcase my tenacity, adaptability, and problem-solving skills in facing new situations and challenges.

In my free time, I enjoy hiking and exploring nature, which helps me recharge and find inspiration for my personal engineering projects.

# Projects

Selection (not exhaustive, see my website for more details) of some projects I've worked on that relate to my academic, professional, and personal interests.

I consider them as way to experiment, learn, and get a hands-on approach to engineering.

## Academic Projects

*Politecnico di Milano, Milan (IT) & University of Waterloo, Waterloo (CA)*

*Sep 2020 - Present*

MOST OF THE PROJECTS WERE DONE INDIVIDUALLY, AT THE EXPLICIT REQUEST OF THE PROFESSOR.

- **Implementation of path planning algorithms**: memory-efficient graph and sample-based search algorithms (A*, Dijkstra, RRT, RRT* and RRT-Kinodynamic) for path planning in robotics. Implementation in MATLAB, validation on both 2D and 3D environments via ROS ecosystem.
- **Study on Nonreciprocal Behavior in Time-Space Modulated Beams**: analysis of diode-like behavior in time-space modulated beams by means of piezoelectric shunts. Structure simulations in Comsol Multiphysics, experimental data analysis with MATLAB.
- **Topology Optimization of Hub Carrier**: mass minimization of a hub carrier structure, with constraints on the compliance and the manufacturability. Analysis with Altair HyperWorks suite.
- **Modeling and Control of a MagLev system**: analysis of the dynamics of a magnetic levitation system, parameter identification and control/filters design (PID, LQR and MPC, coupled with KF and EKF). Simulation in MATLAB/Simulink and hardware deployment on *RTDAC/PCI I/O* board from INTECO.
- **Topology Optimization of 2D structures**: implementation of optimization routines based on the CONLIN algorithm. Validation on both discrete and continuous problems.
- **Structural Health Monitoring (SHM) as a multivariate outlier detection problem**: analysis of a tie-rods element subjected to both damage and environmental variability, by means of statistical indices as Mahalanobis Squared Distance (MSD) and Principal Component Analysis (PCA).
- **Drag Coefficient Analysis of a Model Rocket Using Ansys Fluent**: simulation of the flow around a model rocket to determine the drag coefficient and comparison with theoretical model.
- **Development of a 2D CFD solver in C/C++ for the solution of the Navier-Stokes equations for incompressible flows**: implementation of the SCGS and SIMPLE algorithms, with validation on the lid-driven cavity flow.
- **Implementation of a nonlinear Finite Element Analysis (FEA) solver**: implementation of the plasticity theory based on the radial return algorithm on top of a linear FEA solver.
- **Chip Scale Atomic Clocks (CSAC)**: analysis of the physics behind their operation and current state of the art, with a focus on MEMS/NEMS technology.
- **Laser/Material Interaction**: thermal analysis of the laser cutting process, with a focus on the vaporization and melt mechanisms.
- **Analysis of the electronic density for a given molecule**: visualization of the electronic density field of a molecule using MATLAB.

$$
\begin{cases}
\dot{z} = v \\
\dot{v} = m^{-1}\left(\frac{1}{2}\frac{\partial L_1}{\partial z} I_1^2 + \frac{1}{2}\frac{\partial L_2}{\partial z} I_2^2 - \frac{1}{2} C_d A \rho \dot{z}|\dot{z}| + mg\right) \\
\dot{I}_1 = \left(\frac{1}{2}\frac{\partial^2 L_1}{\partial I_1^2} I_1^2 + 2\frac{\partial L_1}{\partial I_1} I_1 + L_1\right)^{-1}\left(-\frac{1}{2}\frac{\partial^2 L_1}{\partial I_1 \partial z}\dot{z} I_1^2 - \frac{\partial L_1}{\partial z}\dot{z} I_1 - R_1 I_1 + V_1\right) \\
\dot{I}_2 = \left(\frac{1}{2}\frac{\partial^2 L_2}{\partial I_2^2} I_2^2 + 2\frac{\partial L_2}{\partial I_2} I_2 + L_2\right)^{-1}\left(-\frac{1}{2}\frac{\partial^2 L_2}{\partial I_2 \partial z}\dot{z} I_2^2 - \frac{\partial L_2}{\partial z}\dot{z} I_2 - R_2 I_2 + V_2\right)
\end{cases}
$$

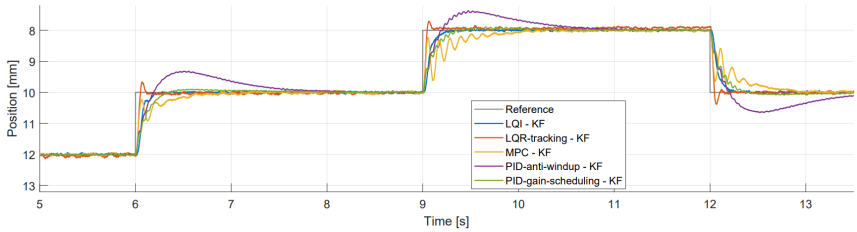


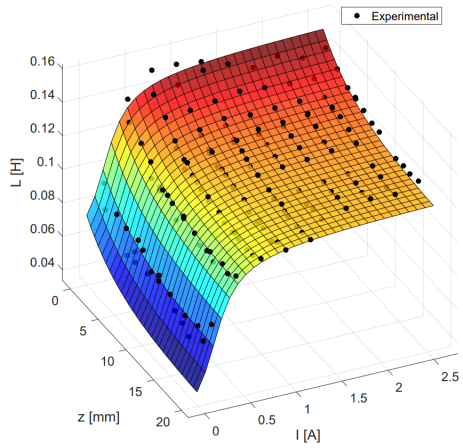


*Extrapolated results from the MagLev project: system's equations of motion (top-left), inductance parameter identification (right) and system's response to a multistep input under different controllers (bottom-left). Accuracy of simulations allowed designing stable controllers in the full operability range of the system (3-22[mm]).*

## Personal Transportation Vehicle (Sidewalk vehicle)

*Milan (IT) & Zagreb (HR)*

Pro Hackin' Project 2023, in partnership with RIMAC Automobili

*Mar 2023 - Jun 2023*

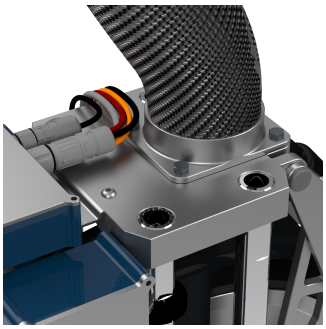

Designed and developed a personal transportation vehicle for urban sidewalks.
Team project with students from four top European universities, featuring iterative feedback from RIMAC engineers. Selected as the winning team.

- Hackathon 1: Defined visions, user personas, functions, and requirements.
- Hackathon 2: Performed functional decomposition, created morphological matrix, and developed concepts.
- Hackathon 3: Completed CAD design, FEM simulations, FMEA, and cost analysis.

## Model Rocket with On-Board Flight Computer

*Personal Workshop, Como (IT)*

Personal project to celebrate BSc

*Jun 2023*

*Launched and recovered without any damage, maximum elevation* $+538m$

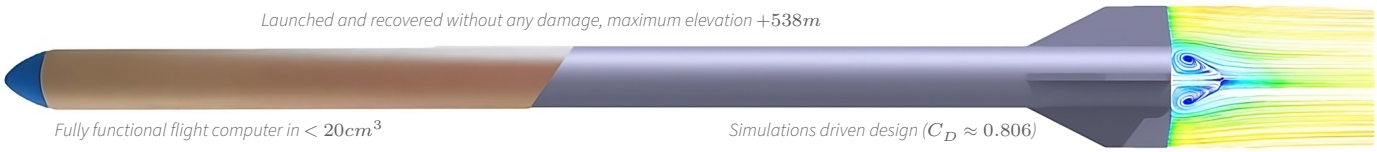

*Fully functional flight computer in* $< 20cm^3$

*Simulations driven design* ($C_D \approx 0.806$)

Designed, optimized, and built a $63\,\mathrm{cm}$ model rocket using CAD and CFD-driven iterations.

Constructed primarily from low-cost materials (cardboard & wood) with 3D printed PLA components.
Key features:

- Flight time $\approx 60\,\mathrm{s}$; maximum speed $+120\,\mathrm{m/s}$; peak acceleration $+10g$.
- Parachute-based recovery system, fully functional and reliable.
- On-board flight computer with barometric, temperature, and accelerometer sensors capable of logging flight data.

## Selection of other minor projects

*Personal Workshop, Como (IT)*

Done for fun or for educational purposes

*Jan 2021 - Present*

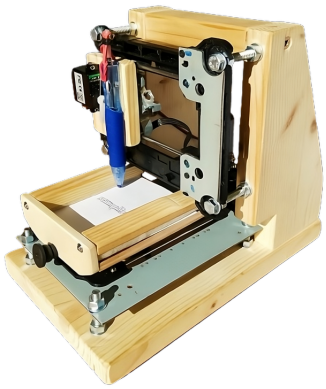

CNC plotter to go from any digital image to its physical representation.

- Arduino based plotter with custom software.
- Canny edge detection algorithm.
- Recycled components from old DVD drives and wood.

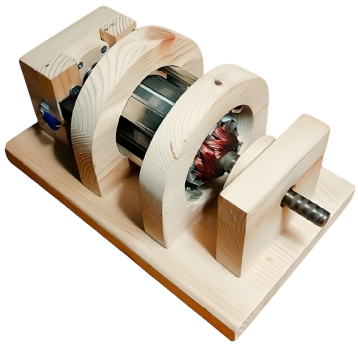

DC electric motor model to explain its working principle to my peer students.

- Recycled components from an old lawn mower and wood.
- Controllable in speed via a custom electrical circuit (diodes bridge and potentiometer).

*Tommaso Bocchietti*

I hereby give consent for my data included in this document to be processed by **Whom It May Concern** for recruiting purposes.