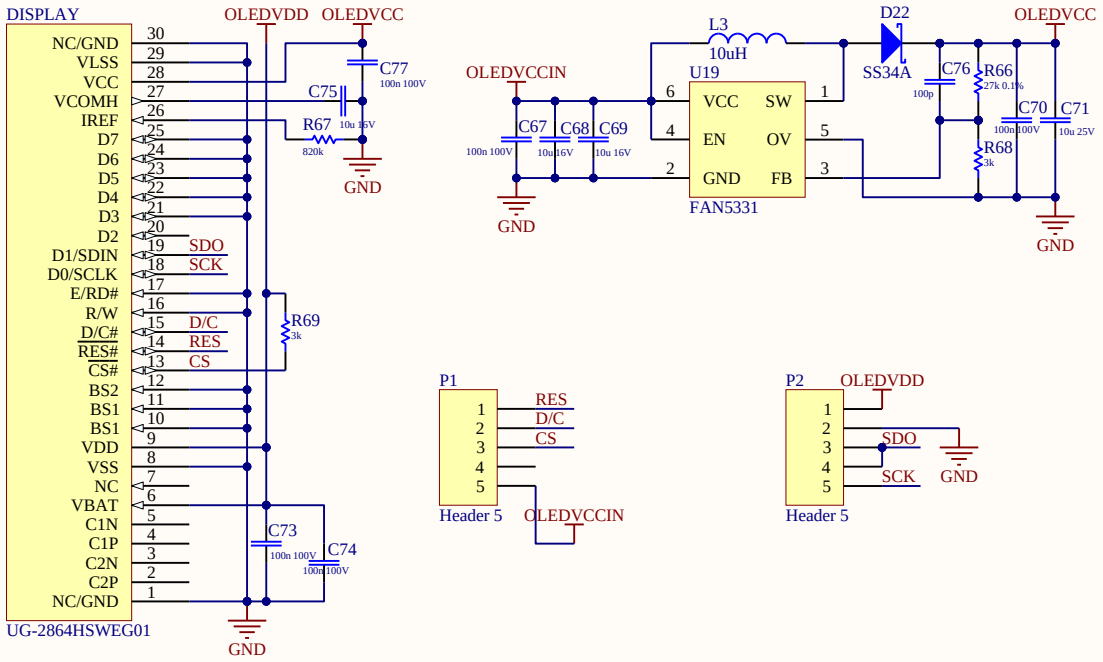

Title		
Size A4	Number	Revision
Date: 12.05.2020	Sheet of	
File: C:\Users\..\UniSolder52C_OLED.SchDoc	Drawn By:	