SEVENTH EDITION

Construction Methods and Management

S. W. NUNNALLY

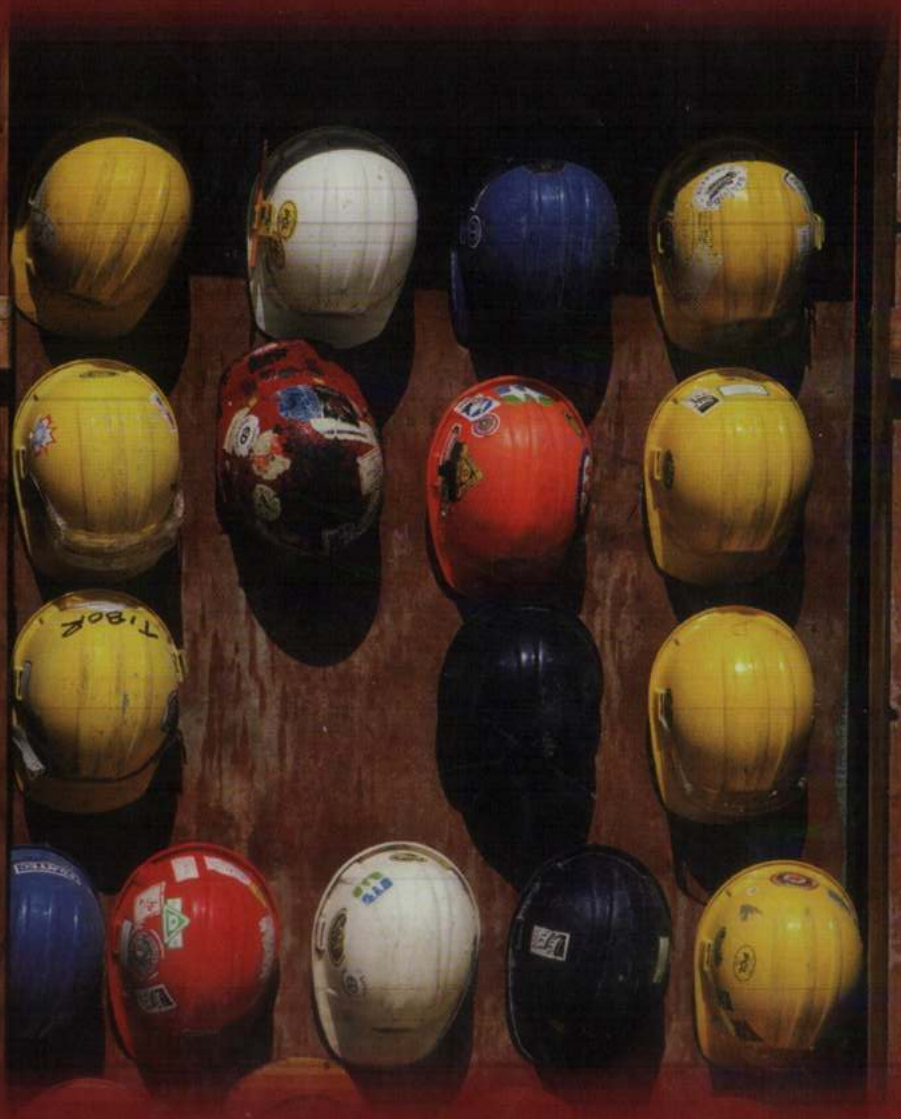

NUNNALLY

Construction Methods and Management

SEVENTH EDITION

PEARSON

Prentice Hall

SEVENTH EDITION

Construction Methods and Management

S. W. NUNNALLY
Consulting Engineer
Professor Emeritus
North Carolina State University

PEARSON
Prentice Hall

Upper Saddle River, New Jersey
Columbus, Ohio

Library of Congress Cataloging-in-Publication Data
Kinnally, [illegible]
Construction [illegible] / [illegible] Kinnally. [illegible] ed.
p. cm.
Includes bibliographical reference and index.
ISBN [illegible]
1. Building & Construction Industry—Management. I. Title.

[illegible]
[illegible]

[illegible]

Editor-in-Chief: [illegible]
Senior Acquisitions Editor: [illegible]
Editorial Assistant: [illegible]
Production Editor: [illegible]
Design Coordinator: [illegible]
Cover Designer: [illegible]
Cover Photo: [illegible]
Production Manager: [illegible]
Executive Marketing Manager: [illegible]
Senior Marketing Coordinator: [illegible]
Marketing Assistant: [illegible]

This book was set in [illegible] by GGS Book Services. It was printed and bound by R.R. Donnelley & Sons Company. The cover was printed by [illegible].

Copyright © 2007, 2004, 2001, 1995, 1991, 1987, 1981 by Pearson Education, Inc., Upper Saddle River, New Jersey 07458.
All rights reserved. Except [illegible] United States copyright law, no part of this publication may be reproduced, stored in a retrieval system, or transmitted in any form or by any means, electronic, mechanical, photocopying, recording, or likewise. For permission to reproduce copyrighted material, write to the Permissions Department.

Pearson Prentice Hall™ is a trademark of Pearson Education, Inc.
Pearson® is a registered trademark of Pearson plc.
Prentice Hall® is a registered trademark of Pearson Education, Inc.

Pearson Education Ltd.
Pearson Education Singapore, Pte. Ltd.
Pearson Education Canada, Ltd.
Pearson Education – Japan
Pearson Education Australia Pty. Limited
Pearson Education North Asia Ltd.
Pearson Education, Upper Saddle River, New Jersey
Pearson Education Malaysia, Pte. Ltd.

PEARSON
Prentice Hall

[illegible]
[illegible]

To Joan, Steve, Jan, and John

Preface

This book is based on the author's years of experience in construction engineering and education. The objectives of the seventh edition are intended to be of value to construction engineers and construction managers in planning, estimating, and controlling construction operations and to construction managers in planning, scheduling, and controlling construction projects so that we can do the best possible job. It is believed that the material presented is comprehensive enough to serve as the basis for a variety of construction courses as well as for self-study. For an introductory course in construction, well-prepared freshman students should be able to cover the material in one semester. For more in-depth courses, the material may be split between two semesters. Exercises are provided at the end of each chapter which can be assigned as homework problems. The instructor may choose to supplement the course and the discretion of the instructor. In solving the computer problems contained in the construction-related courses, it is suggested that students be encouraged to use electronic spreadsheets and word processors. Questions in addition to conventional computer programming languages. Interactive computer software for use with Marshall's available from the publisher. It is strongly recommended that study of the material in this book be supplemented by visits to construction projects and professional seminars.

Reflecting the industry developments and innovations in the construction industry, this edition incorporates new topics and material. Some of the major developments in the construction industry. New and expanded topics include: building codes, formwork and masonry construction, concrete construction, construction productivity, concrete mix design, quality control, concrete work, but design topics, soil and aggregate compaction, and wood preservation. In addition to updated text, illustrations, references, and end-of-chapter problems.

Interested readers are invited to provide feedback of this type by writing to the author. Many individuals and organizations have provided information and photographs and have contributed to the improvement of this book. Their contributions are gratefully acknowledged. Please also to the contributors of their material is gratefully acknowledged. Please also to the contributors of this book. Graduate students have made helpful comments and suggestions. In addition, many thanks to Charles Pankow, Paul Virgin, Polytechnic Institute of New York, and Steve Lowery, for their assistance with the seventh edition manuscript.

Comments from readers regarding errors and suggestions for improvement are solicited. Please send to author, by email or mail.

S. W. Marshall

Contents

1 **Introduction** 1

1–1 The Construction Industry 1
1–2 The Construction Process 4
1–3 Construction Regulations 9
1–4 Size of the Industry 10
1–5 Construction Management 11
1–6 Construction Technical Projects 15
Definitions 15
References 16

PART ONE Earthmoving and Heavy Construction 17

2 **Earthmoving Materials and Operations** 19

2–1 Introduction to Earthmoving 19
2–2 Earthmoving Materials 21
2–3 Soil Identification and Classification 22
2–4 Soil Volume Change Characteristics 25
2–5 Spoil Banks 30
2–6 Estimating Earthmoving Volumes 31
2–7 Construction Use of the Mass Diagram 35
Problems 39
References 40

3 **Excavating and Lifting** 41

3–1 Introduction 41
3–2 Hydraulic Excavators 42
3–3 Shovels 50
3–4 Draglines 54

3-5 Flexibility 60
3-6 Trenching and Trenchless Technology 62
3-7 Pipeline 66
Problems 68
References 79

4 Loading and Hauling 81
4-1 Excavating Equipment and Costs 81
4-2 Tractors 97
4-3 Loaders 103
4-4 Scrapers 106
4-5 Truckers Weights 117
Problems 124
References 125

5 Compacting and Finishing 127
5-1 Principles of Compaction 127
5-2 Compaction Equipment and Procedures 132
5-3 Grade and Finish Operations 146
5-4 Grading and Finishing 146
Problems 152
References 153

6 Rock Excavation 155
6-1 Introduction 155
6-2 Drilling 159
6-3 Blasting 168
6-4 Rock Ripping 176
6-5 Estimating Production and Cost 178
Problems 180
References 183

7 Production of Aggregate, Concrete, and Asphalt Mixes 185
7-1 Production of Aggregate 185
7-2 Production of Concrete 199
7-3 Production of Asphalt Mixes 205
Problems 211
References 213

8 Paving and Surface Treatments 215
8-1 Concrete Pavements 215
8-2 Asphalt Paving and Surface Treatments 219

8-3 Pavement Repair and Rehabilitation 321
Problems 331
References 337

9 Compressed Air and Water Systems 233
9-1 Introduction [illegible]
9-2 Compressed Air Systems 238
9-3 Water Supply Systems [illegible]
Problems 259
References 267

PART TWO Building Construction 261

10 Foundations 263
10-1 Foundation Systems 265
10-2 Spread Footings 268
10-3 Piles [illegible]
10-4 Piers and Caissons 275
10-5 Stability of Foundations 286
10-6 Protection Between and Workers 291
10-7 Temporary Foundations [illegible]
10-8 Tremie Concrete 299
Problems 302
References 305

11 Wood Construction 295
11-1 Introduction 296
11-2 Wood Structural Members 298
11-3 Frame Construction 300
11-4 Timber Construction 321
11-5 Fasteners, Connectors, and Bracing [illegible]
Problems 339
References 345

12 Concrete Construction 335
12-1 Characteristics and Properties of Concrete 338
12-2 Concrete Construction Practices 341
12-3 Concrete Formwork 352
12-4 Reinforcing Steel 361
12-5 Quality Control 367
Problems 368
References 369

13 Concrete Form Design 371

13-1 Design Principles 371
13-2 Design Loads 373
13-3 Methods of Analysis 374
13-4 Slab Form Design [illegible]
13-5 Wall and Column Form Design [illegible]
13-6 Design of Form Ties [illegible]
Problems 400
References 408

14 Masonry Construction 409

14-1 Brick Masonry 409
14-2 Concrete Masonry [illegible]
14-3 Other Masonry Materials [illegible]
14-4 Determining Quantity of Masonry 422
14-5 Construction Practice [illegible]
Problems 430
References 436

15 Steel Construction 439

15-1 Introduction 439
15-2 Structural Steel [illegible]
15-3 Steel Erection 454
15-4 Steel Connections 445
15-5 Safety 448
Problems 447
References 449

PART THREE Construction Management 451

16 Planning and Scheduling 453

16-1 Introduction 453
16-2 Bar Graph Method 454
16-3 CPM [illegible] Critical Path Method 459
16-4 Scheduling and Resource Assignment Using CPM 471
16-5 Practical Considerations in Using CPM [illegible]
16-6 Other Scheduling Methods 476
Problems 478
References 481

17 Construction Economics 481

17-1 Introduction 481
17-2 Time Value of Money 481

17-3 Equipment Costs 482
17-4 Equipment Rental 491
17-5 The Rental/Lease-Buy Decision [illegible]
17-6 Internal Management of Construction 498
Problems 502
References [illegible]

18 Contract Construction 505
18-1 Introduction 505
18-2 Bidding or Negotiating [illegible] 507
18-3 Construction Contracts 508
18-4 Plans and Specifications [illegible]
18-5 Contract Administration 512
Problems [illegible]
References 515

19 Construction Safety and Health and Equipment Maintenance 517
19-1 Importance of Safety 517
19-2 OSHA [illegible]
19-3 Safety Programs [illegible]
19-4 Safety Practices [illegible]
19-5 Occupational Health in Construction [illegible]
19-6 Equipment Maintenance [illegible]
Problems 529
References 530

20 Improving Productivity and Performance 531
20-1 The Big Picture 531
20-2 Work Improvement [illegible]
20-3 Quantitative Management Models [illegible]
20-4 Computers and Data Bases [illegible]
20-5 Automation [illegible]
20-6 The Future [illegible]
Problems [illegible]
References 552

Appendix A: Metric Conversion Factors 553

Appendix B: Construction Industry Organizations 554

Appendix C: Construction Internet Sources 558

Index 559

1 Introduction

1–1 THE CONSTRUCTION INDUSTRY

The construction industry finds its origin in the activities of construction and the manufacture and supply of building materials and equipment. In spite of the large industry in the United States, financially accounting for about 10% of the nation's gross national product and employing about 10 million people (Sections 2 and 3), Annual U.S. new construction volume has exceeded $500 billion in recent years. Because construction is an evolving, dynamic process where action provides satisfaction to people and is more evident in some people than others. However, the economic and environmental impacts of construction work have been specifically measured and documented in recent years. In addition, construction contracting is very competitive and subject to the ups and downs of business cycles.

It is widely recognized that construction is a combination of art and science. While numerous analyses of the mechanical aspects of construction have been made, it is essential that construction professionals have knowledge of the sciences and management techniques of the profession. Construction management is a relatively new discipline in the university curriculum, but it is a very valuable tool in the construction business world. Thus, the author intends to provide a more analytical approach in this textbook to the management of every opportunity and resource in the construction activities. An understanding of the topics presented in the following chapters will provide a foundation for the management of construction.

While construction has traditionally been very conservative in the introduction of new technology, the industry has experienced growth in recent years and has shown a willingness to use the development of new construction methods, equipment, materials, and management techniques. As a result, many people have been attracted to the industry and particularly to the profession of construction professionals.

Construction Contractors

Companies and individuals involved in the business of construction are commonly referred to as contractors. Contractors are commonly categorized because of the type of work they do. Contractors may be classified as general contractors

Figure 1.1 Construction of St. Louis Gateway Arch. (Courtesy of American Institute of Steel Construction.)

[illegible]

Construction Industry Divisions

The major divisions of the construction industry are residential building, nonresidential building, heavy construction, and specialty construction (see Table 1-1). The residential and nonresidential building sectors are the most visible to the public and provide the most direct and immediate benefits. Building construction accounts for a majority of the total U.S. construction market, as Figure 1-2 shows. Many of the types and sizes of projects fall into the heavy construction sector. Construction in general (Figure 1-3) includes highways, airports, railroads, bridges, dams, harbors, dredging, and other types of civil works. Other specialty divisions of the construction industry sometimes must include industrial construction, process plant construction, power construction, and utility construction.

1-2 THE CONSTRUCTION PROCESS

Project Development and Contract Procedures

The major steps in the construction contracting process include the solicitation, bid preparation, subcontracting, contract award, and notice to proceed. The steps are shown in more detail in Chapter 17. However, before the bidding process can take place, the owner must determine the requirements for the project and have the necessary plans, specifications, and bid documents prepared. The owner's initial involvement in the project development process is considerable. The major projects, steps in the project development process include:

- Recognizing a need for the project.
- Determining architectural and financial feasibility of the project.
- Preparing detailed plans, specifications, and cost estimates for the project.
- Obtaining special commitments and bids. This involves assuring compliance with zoning ordinances, building codes, and environmental and other regulations.

For small projects, many of these steps may be carried out on a very informal basis. However, for large or complex projects this process may span many years or many steps.

How Construction Is Accomplished

The primary methods by which facilities are constructed are illustrated in Figures 1-5 to 1-9. These include:

- Construction employing an owner-contractor team.
- Owner management of construction.
- Construction by general contractor.

Figure 1–2 Distribution of U.S. new construction volume (source: Bureau of the Census)

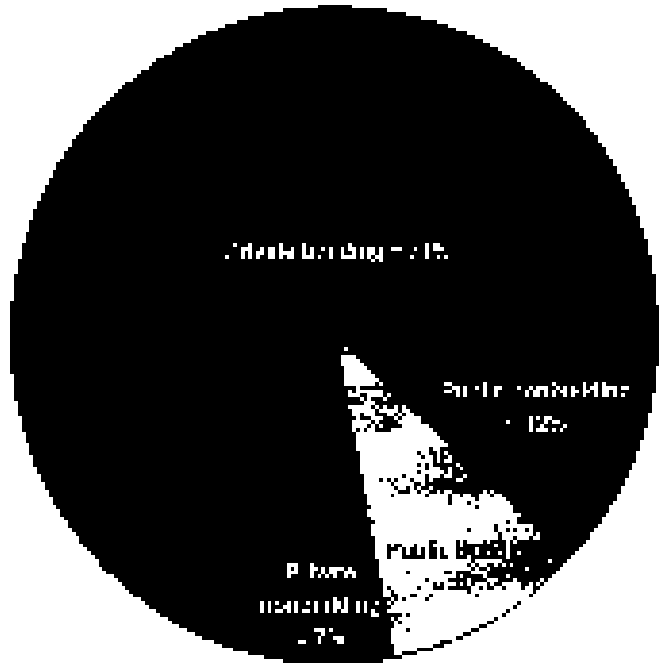

Figure 1–3 Medium building construction project

Figure 1–4 Transportation hangar project—Kennedy Space Center launch complex (U.S. Air Force photograph).

- Construction management design-build (turnkey) contract.
- Construction utility [illegible] or management contract.

Many important organizations as well as a number of governmental agencies provide [illegible] information for use of [illegible] in [illegible] planning, maintenance, and training work. [illegible] or improving new construction [illegible] Most frequently, owners [illegible] information [illegible] new construction (Figure 1–6). The work [illegible] by the owner's [illegible] by providing [illegible] construction [illegible] methods.

[illegible] by a general contractor, specialty trade [illegible] generally the most [illegible] [illegible] However, [illegible] [illegible] [illegible] design-build to

Figure 1-5 Construction employing owner construction forces.

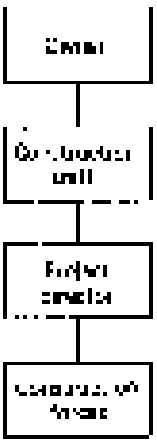

Figure 1-6 Owner managed construction. (Either (a) or (b) or both may be employed.)

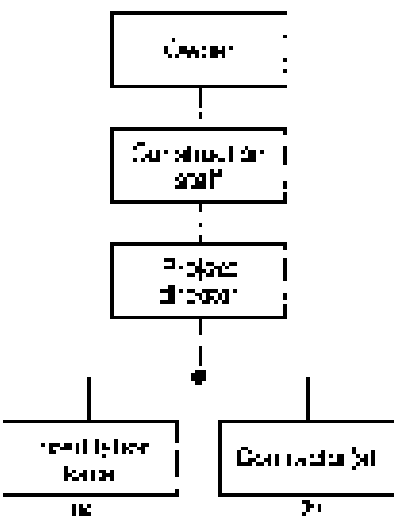

market, construction and construction offering a competitive management approach. The owner's construction staff is involved in the structure of the project (Figure 1-6). In order to commence with a new industrial or commercial facility, management identifies the functions and performance oriented requirements. Such requirements are frequently formulated by consultants. The facility requirements for a particular type of construction are then converted into designs which may most fully satisfy the owner's needs. Since the same organization is both designing and building the facility, constructability problems are minimized and communication requirements are greatly reduced. In conventional construction projects, there is a separation between the design and construction phases. In this case, the construction contractor is normally not involved in the design process. This type of construction is referred to as fast track

Figure 1.7 Construction by a general contractor

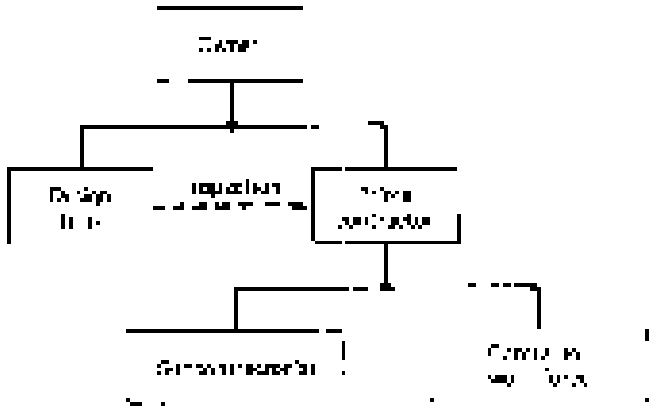

Figure 1.8 Construction employing a design/build firm

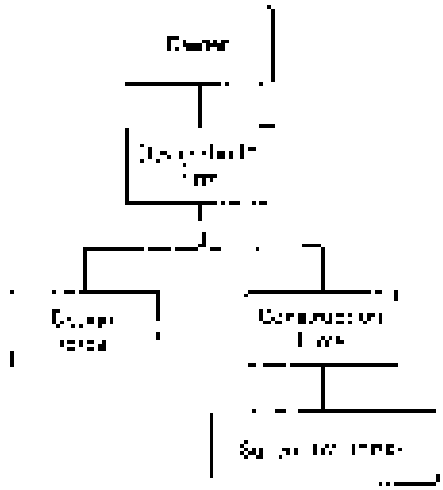

construction; the usual advantages of the design/build approach are that it gives the owner a single point of responsibility, reduces supplier risk, reduces complexity, and simplifies the proposal.

Construction of a facility using an integrated approach (Figure 1.9) is somewhat different from the conventional construction process. Under the joint management of the Integrated Project Team (IPT), a project team of owner, contractor, and CM has as the owner's agent to direct both the design and construction of a facility. These participants are guided by the owner's requirements and constraints, and are responsible for the project. The owner may offer partial sharing of risk and cost compared to conventional procedures, as a result of the close cooperation between design and construction. However, experience of this author indicates that the contractor may provide a typically somewhat lower financial risk and may be the project and the owner because it does not provide any savings resulting from improved coordination

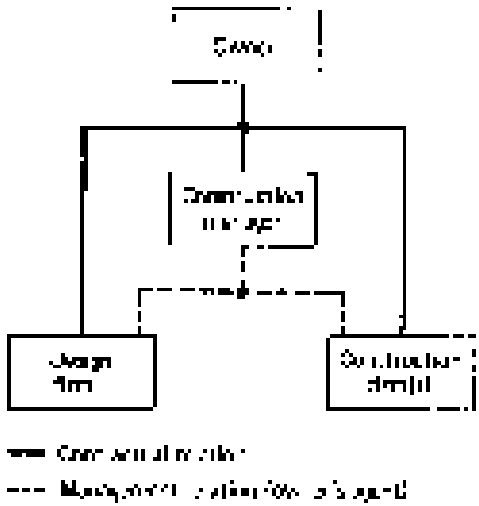

Figure 1-8 Construction utilizing a construction management contract.

between designer or construction. There is another less common form of construction management contract known as Guaranteed Maximum Price Construction Management. Under this management, the construction manager guarantees that the project cost will not exceed a specified amount. Under this procedure, which shifts a certain amount of the risk, the construction contract is commonly awarded by the construction manager.

1-3 CODES AND REGULATIONS

Projects constructed in the United States must comply with a number of various government regulations. These include building codes, zoning ordinances, environmental regulations, and business or licensing laws, among others.

Building Codes

Building codes, which are enacted primarily with public safety provisions in mind, govern the manner in which buildings or structures are constructed. Not only do they apply to the construction of buildings, in the United States the Board of Fire Underwriters in 1905 published the *Recommended National Building Code*, which provided minimum standards for fire prevention and structural safety. This code, later known as the *National Building Code*, published by the Building Officials and Code Administrators International, was the only nationwide model building code for a number of years. Other major building codes later published include the *Southern Building Code*, published by the Southern Building Code Congress International, and the *Uniform Building Code*, published by the International Conference of Building Officials. The Southern Building Code Congress, originally formed in the mid-1940s, eventually joined the International Code Council (ICC) to publish a single

[illegible] of [illegible] in state or [illegible] source of the International Codes [illegible] [illegible] [illegible] and [illegible] [illegible] [illegible]

[illegible]

[illegible]

The construction profession is also regulated by a number of governmental agencies and conflicts in personal injury. Government regulations generally require construction contractors to have such professional qualifications verified by licensing or registration. This may be done on the basis of tests or by the use of certification or licensing boards. Licensing requires satisfactory completion of a comprehensive written examination plus proof of adequate professional qualifications. [illegible] licensing is generally required for contractors, [illegible] contractors, the [illegible] public health and safety.

1–4 STATE OF THE INDUSTRY

Construction Productivity

[illegible]

[illegible]

[illegible]

[illegible]

Some techniques for improving construction productivity and performance are discussed in the following sections and in Chapter 20.

Reducing Construction Costs

Some of the best opportunities for construction cost savings come in the design process, even people concerned with engineering. Standardizing features (for example, using a certain number of standard dimensions, grouping plumbing and other equipment to minimize piping and conduit runs, designing all partitions to be parallel and straight, utilizing economical materials, scheduling "just-in-time" delivery, employing cost-effective technology, hiring qualified craftsmen) is a key element in the design process. In one of the advantages claimed for prefabrication, the overall construction cost is lowered.

Some areas in which construction costs can be increased are: costs associated with delays, overtime, rework:

- Good work planning
- Quality control and auditing, [illegible] and [illegible].
- Effectively scheduling labor, materials, and equipment
- Properly supervising work.
- Using labor-saving techniques, such as prefabrication and [illegible].
- Minimizing rework through quality control.
- Preventing accidents through good safety procedures.

1–5 CONSTRUCTION MANAGEMENT

Elements of Construction Management

The [illegible] management [illegible] since the [illegible] of managing the [illegible] construction [illegible] construction [illegible]. However, [illegible] the [illegible] of managing the [illegible] [illegible] project manager, superintendent, or one of the [illegible] executives, manages the basic [illegible] of [illegible]. These [illegible] include [illegible] [illegible] [illegible]

[illegible] performance-based practices. If being continued, will [illegible] fully [illegible] [illegible] failure.

While the principal [illegible] of any construction [illegible] is to complete a project on time and within budget, [illegible] the basic number of other important responsibilities. These include safety, [illegible] public and professional relations, productivity improvement, innovation and improvement of technology.

The scope of construction management is broad and includes such topics as construction contracts, [illegible] methods and materials, [illegible] and cost accounting, progress and cost control, quality control, and safety. These are the subjects to which the following portions of this book are addressed.

Quality Management

In [illegible] management [illegible] construction process steps must be taken to ensure [illegible] project specifications. More recently, the terms quality management (QM) and quality assurance (QA) have been adopted to include all aspects of production and supporting construction projects which result in quality assurance. Quality management includes such activities as specification development, process control, product acceptance, [illegible] certification, training and [illegible] (QA), which is part of the quality management process, is usually concerned with the process control. Since the contractor is the person [illegible] over the construction process, it has been [illegible] that quality control is more effective when performed by the contractor.

Regardless of the procedure [illegible], the construction contractor is ultimately responsible for construction quality. Quality assurance inspectors and the [illegible] by an owner's representative or government agency provide little [illegible] [illegible] verify the [illegible] of the project [illegible]. However, [illegible] realize that the entire cost associated with rework is ultimately borne by the contractor, [illegible] profit margin. The quality [illegible] will result in the [illegible] [illegible] failure.

In recent years, there has been an increasing use of statistical methods for process control, particularly in asphalt and concrete pavement construction specifications. While details of such procedures are beyond the scope of this [illegible], the following is a brief explanation of some of the concepts involved.

Since the results of virtually all construction processes are products which vary over some statistical distribution, statistical methods are used for such purposes as:

- Ensuring that all elements of the work have an equal chance of being included in the samples
- Verifying that the samples actually do represent the product or process from which they were taken
- Analyzing the variations in the process to determine if and when it is out of control
- Establishing a probable level of quality in statistical terms
- Developing a system which allows the contractor and the construction inspector to know if quality is being achieved in the construction process.

Safety and Health

[illegible] the construction industry has [illegible] the highest [illegible] in the United States [illegible] the frequency and extent of industrial accidents [illegible] of the Occupational Safety and Health Act of 1970 which [illegible] specific safety and health requirements for virtually all industries [illegible] This [illegible] the Occupational Safety and Health Administration (OSHA). [illegible] management concerns [illegible] OSHA requirements and penalties. However, the financial impact of a [illegible] OSHA penalties [illegible] safety precautions are presented [illegible] and developed in more detail in Chapter [illegible]. The following [illegible] have been found [illegible] for the majority of [illegible] injuries:

- [illegible] and culture of housework [illegible]
- [illegible]
- [illegible] facilities [illegible]
- [illegible]
- [illegible]

Construction managers should give [illegible] to the causes of the safety hazards [illegible].

In the area of [illegible] health, the [illegible] environment is [illegible] by exposure [illegible] dust, radiation, toxic materials and extreme temperatures. Again, this [illegible] in more detail in Chapter [illegible].

Organization for Construction

There are [illegible] of many different [illegible] are construction firms. However, Figure [illegible] presents an organizational chart that [illegible] a medium-to-large size [illegible] company.

Reasons for Construction Company Failure

[illegible] have [illegible] reasons for the [illegible] in the construction industry. Some of the [illegible] factors they [illegible] include [illegible] of capital, [illegible] management [illegible] ability. Some of these factors can be [illegible] elements of [illegible] management. Study [illegible] indicates that [illegible] of construction [illegible] failures can be attributed to [illegible] management.

Use of Computers

The wide availability and low cost of [illegible] computers have placed these powerful tools at the disposal of [illegible] construction [illegible]. Construction applications of

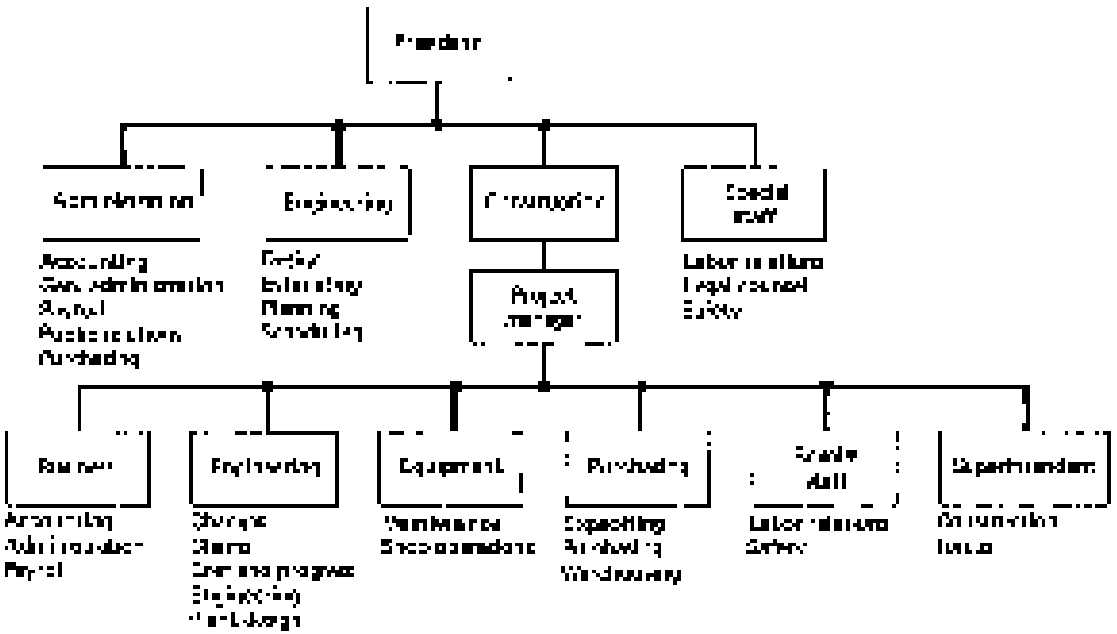

Figure 1-10 Representative construction company organization chart

computers are almost ubiquitous. Construction applications of computers are discussed in more detail in Chapter 20. Examples of some of the major categories of personal computer programs are presented in the remaining chapters of this book.

Perhaps the most exciting development in the construction application of computers is the widespread availability of the Internet (World Wide Web) with its almost unlimited resources, along with electronic mail (e-mail) services. Jobsite personnel now have access to increasingly important information and communication with clients and dealers, with companies from prime contractors to material suppliers, from project managers and superintendents to home office. Manufacturers are also providing online catalogs, as well as services of repair bulletins and alerts. Equipment rentals and sales are also being electronically processed. While some information is formatted and available only on dedicated networks, increasingly such data are services and resources available to contractors. The universal influence of computers and the Internet on the industry is indicated in Appendix C. Appendix C also lists a number of construction Internet resources.

Most of the remainder of application software for construction contractors is based on spreadsheets, word processing, computer aided drafting, project management, quan-

[illegible]

I-6 CONSTRUCTION TRENDS AND PROSPECTS

Construction Trends

[illegible]

Problems and Prospects

[illegible]

PROBLEMS

1. Briefly describe at least three key areas of [illegible] construction process management.
2. Describe the personal objectives the construction manager should have when [illegible] project.
3. What roles are [illegible] applying a building information model [illegible]?
4. Section 1-4 [illegible] in which construction can be improved [illegible] in [illegible] and [illegible] project cost.
5. Recognizing the importance of [illegible] which tools do you suggest [illegible] to take [illegible] facility?
6. Briefly explain the difference between [illegible] utilizing a [illegible] and utilizing a [illegible] management concept.
7. Explain the meaning of the term [illegible].
8. Identify three construction [illegible] that account for a majority of serious construction injuries.
9. What [illegible] of construction [illegible] the [illegible] component [illegible] construction [illegible].
10. Identify three specific [illegible] and implications of a personal computer [illegible] be [illegible] construction [illegible].

REFERENCES

1. Adams, Eric, Carl T. Haas, J. Tom [illegible] Information and Facility Management: [illegible] Productivity Trends 1991–1995," ASCE Journal of Construction Engineering and Management, vol. 125, no. 2, March/April 1999, pp. 104.
2. [illegible] Wiley & Sons, New York, [illegible].
3. [illegible] Report Analysis Survey for U.S. Design and Construction Firms, Raleigh, NC: NCSU, 1996.
4. [illegible] Construction Industry, [illegible], 1996.
5. [illegible] Report Series (CE series), The Stationery Commission, Washington, DC, [illegible].
6. [illegible] Department of Transportation, Federal Highway Administration, Washington, DC, [illegible].
7. [illegible] New York, [illegible].
8. [illegible] Washington, DC, [illegible].
9. [illegible] Cyber Productivity Reality Technology," ASCE Journal of Construction Engineering and Management, vol. 125, No. 1 (March/April), [illegible].
10. [illegible] New York: John Wiley, [illegible].

PART ONE

Earthmoving and Heavy Construction

2

Earthmoving Materials and Operations

2–1 INTRODUCTION TO EARTHMOVING

The Earthmoving Process

Earthmoving is the process of moving earth or rock from one location to another. The process involves the construction equipment of excavation, distribution, density, and compaction. Activities involved in the process include excavating, loading, hauling, placing, grading, spreading, compacting, watering, and finishing. The construction procedures and equipment involved in earthmoving are described in Chapters 3 and 4. Efficient management of the earthmoving process requires knowledge of earthmoving materials, work quantities and production rates, proper selection of equipment, and proper job management.

Equipment Selection

The choice of equipment for a construction project has a major influence on the efficiency and profitability of the construction operation. Although there are a number of factors that should be considered in selecting equipment for a project, the most important criteria is the ability of the equipment to execute the work in a cost-effective manner. Equipment capacity is a secondary criterion for selection, and it should be considering the position of the equipment and production rate. Finally, but in all cases, profit is maximized when the lowest cost per unit of production is achieved. Chapter 13 provides a discussion of construction economics. It is important that when the equipment is selected, the availability of parts and service, and the effect on the overall cost of the construction equipment on the operations.

After the equipment has been selected for a project, a plan must be developed to efficiently utilize the equipment. The planning phase of the project is the process of computer job management, associated plans, and the operating procedures and technical requirements for the equipment and crews.

Production of Earthmoving Equipment

The basic relationship for estimating the production of all earthmoving equipment is:

$$\text{Production} = \text{Volume per cycle} \times \text{Cycles per hour} \qquad (2\text{-}1)$$

The term "volume per cycle" is a measure of average volume of material moved per cycle. This is a unique capacity of the equipment in hand and must be found by using equipment data from manufacturers and equipment manuals. The term "cycles per hour" is more involved and equipment-specific. This term represents the number of cycles actually achieved per hour. In addition to equipment-specific procedures, to estimate the production of major types of earthmoving equipment presented in the chapter which follows.

The cost per unit of production can be calculated as follows:

$$\text{Cost per unit of production} = \frac{\text{Equipment cost per hour}}{\text{Equipment production per hour}} \qquad (2\text{-}2)$$

Methods for determining the hourly cost of equipment operations are explained in Chapter 17.

There are two primary approaches used in using job efficiency to determine the number of equipment units to be used in an operation. The conventional approach is to calculate the number of effective working minutes per hour. This is equivalent to using an efficiency factor expressed in the number of working minutes per hour divided by 60. The other approach is to multiply the number of cycles per hour by an overall efficiency factor. A sample of the factors associated with a wide variety of job conditions and management conditions is presented in Table 2-1. Both methods are illustrated in the example problems.

Table 2-1 Job and management factors for earthmoving operations (From TM 5-3315, U.S. Department of the Army)

	Management Conditions[a]			
Job Conditions[b]	Excellent	Good	Fair	Poor
Excellent	0.84	0.81	0.76	0.70
Good	0.78	0.75	0.71	0.65
Fair	0.72	0.69	0.65	0.60
Poor	0.63	0.61	0.57	0.52

[a] Management factors include:
- Skill, training, and knowledge of workers
- Selection, operation, and maintenance of equipment
- Size, condition, and suitability of equipment for the job

[b] Job factors include conditions that contribute to production costs, including the type of material, weather, and other factors.
- Topographical conditions
- Surface and weather conditions
- Specification requirements for work and [illegible]

2–2 EARTHMOVING MATERIALS

Soil and Rock

Soil and rock are the materials that make up the earth's crust. The terms soil and rock are defined differently by various disciplines. In the earthmoving industry, we will consider those characteristics of soil and rock that affect their excavation, including the volume change characteristics, material classification, and bulking factors.

General Soil Characteristics

Several terms relating to soil's behavior in the earthmoving industry should be understood. *Trafficability* is the ability of a soil to support the weight of vehicles and other equipment without excessive rutting, trafficability is affected by soil type and moisture content, and is a factor in the selection of earthmoving equipment. Soil *stability* is usually expressed qualitatively, although it can be measured by quantitative measurements. Trafficability is generally a function of soil type, moisture content, drainage, stabilization of hard surfaces, or the use of low-ground pressure construction equipment. Soil *shrinkage* is a general term for the reduction in volume of soil when it is compacted. Soil shrinkage characteristics are important in earthmoving and road construction, since soil which is compacted may be dried out. Soil stability is a function of the type of material and the moisture content. Loose, wet soils are highly unstable, whereas compacted, dry soils are much more stable.

Unit soil weight is normally expressed in pounds per cubic yard or kilogram per cubic meter. Unit weight depends on soil type, moisture content, and degree of compaction. For a specific soil, the unit weight is a relatively constant value. Unit weight is a basic parameter. This will not always be commonly used as a measure of compaction, moisture content, bulking, etc. Soil unit weight is used extensively in determining the economy of a construction, as outlined in Chapter 4.

In the measurement of soils, moisture content is defined as the moisture content of a soil is expressed as a percentage for ease of use. The weight of water in a soil divided by the dry weight of the soil.

$$\text{Moisture content (\%)} = \frac{\text{Moist weight} - \text{Dry weight}}{\text{Dry weight}} \times 100 \qquad (2\text{–}2)$$

If, for example, a soil sample weighed 750 lb (340 kg) when moist and 650 lb (295 kg) after drying, the weight of water in the sample would be 750 lb − 650 lb = 100 lb (45.3 kg), and the soil moisture content would be 15%. Using Equation 2–3, this is calculated as follows:

$$\text{Moisture content} = \frac{750 - 650}{650} \times 100 = 15\%$$

$$\left[\ \text{or } \frac{750 - 650}{45.3} \times 100 = 15\%\ \right]$$

2-3 SOIL IDENTIFICATION AND CLASSIFICATION

Soil is considered to consist of five main or dominant types: gravel, sand, silt, clay, and organic material. Gravel is composed of pieces of rock large enough to be visible to the naked eye. Sand is composed of particles larger than 0.075 mm in diameter, which corresponds to the smallest opening in a standard sieve. Silt particles are smaller than 0.075 mm but larger than 0.005 mm. Clay is composed of particles less than 0.005 mm in diameter. Organic soils contain partially decomposed vegetation and animal matter. Highly organic soil has a fibrous texture. It is normally easily identified by its dark color, odor, and spongy feel. It is necessary to conclude that soil is very complex material.

Illustrative soil values in this section are based on the amount and type of each of the five basic materials present. Now for a review of soil identification and classification procedures available in the remainder of this section.

Soil Classification Systems

Two common soil classification systems are used for design and construction in the United States. These are the Unified System and the AASHTO (American Association of State Highway and Transportation Officials). The latter is known as the American Association of State Highway Officials (AASHO). Systems for classifying soil particles 3 in or larger are not covered in this section. Only the particle classification is discussed.

The moisture content of a soil is the water content expressed in percentage of dry weight. A soil with no water will just sit there when an attempt is made to work it. The water content of a soil is an important factor in determining how it will behave when subjected to a stress. Its strength is affected. The plasticity index (PI) is the numerical difference between the liquid and plastic limits and represents the range in moisture content over which a soil remains plastic.

Unified System. Soils are given letter symbols to identify their type. Field identification procedures are given in Table 2-2. Soils that have less than 50% by weight passing the No. 200 sieve are further classified as coarse-grained or fine-grained. Coarse-grained soils are those with less than 50% by weight passing the No. 200 sieve and are further classified as well graded and poorly graded. Gradation curves for well graded and poorly graded soils are shown in Figure 2-1.

Under the AASHTO System, soils are classified as types A-1 through A-8, according to their relative worth as subgrade material. Classification procedures for the AASHTO System are given in Table 2-3.

Field Identification of Soil (Unified System)

When identifying soil according to the Unified System, a sieve, a balance, and a measure for liquids are generally not available for comparison with classification. The use of the procedures described here depends on the ability of the person to make a reasonably accurate soil classification based on the information given in the table.

All particles over 3 in are initially discarded and removed. Then, particles of the sample are separated into those larger than the No. 4 sieve and those smaller than the sieve. Particles

Table 2-2 Unified system of soil classification (concluded)

Coarse-Grained Soils (More Than 50% Retained on No. 200 Sieve)				
Symbol	Name	Percent of Coarse Fraction Larger than 3 in.	Percent of Sample Smaller Than No. 200 Sieve	Comments
GW	Well-graded gravel	50 max.	< 10	Wide range of grain sizes with all intermediate sizes
GP	Poorly graded gravel	50 max.	< 10	Predominantly one size or a range of sizes with some intermediate sizes missing
SW	Well-graded sand	50 max.	< 10	Wide range of grain sizes with all intermediate sizes
SP	Poorly graded sand	50 max.	< 10	Predominantly one size or a range of sizes with some intermediate sizes missing
GM	Silty gravel	50 max.	> 12	Non-plastic fines (see ML below)
GC	Clayey gravel	50 max.	> 12	Plastic fines (see CL below)
SM	Silty sand	50 max.	> 12	Non-plastic fines (see ML below)
SC	Clayey sand	50 max.	> 12	Plastic fines (see CL below)

Tests on Fraction Passing No. 40 Sieve (Approx. 3/8 in. or 0.4 mm)

Fine-Grained Soils (50% or More Passes No. 200 Sieve)				
Symbol	Name	Dry Strength	Shaking	Other
ML	Non-plastic silt	Low	Medium to quick	
CL	Low plasticity clay	Low to medium	None to slow	
OL	Low plasticity organic	Low to medium	Slow	Odor and color
MH	High plasticity silt	Medium to high	None to very slow	
CH	High plasticity clay	High	None	
OH	High plasticity organic	Medium to high	None to very slow	Odor and color
Pt	Peat	Identified by color, odor, spongy feel, and frequently fibrous texture		

Source: Data from Casagrande, A., "Research on the Atterberg Limits of Soils," Public Roads, 13, 8, 1932.

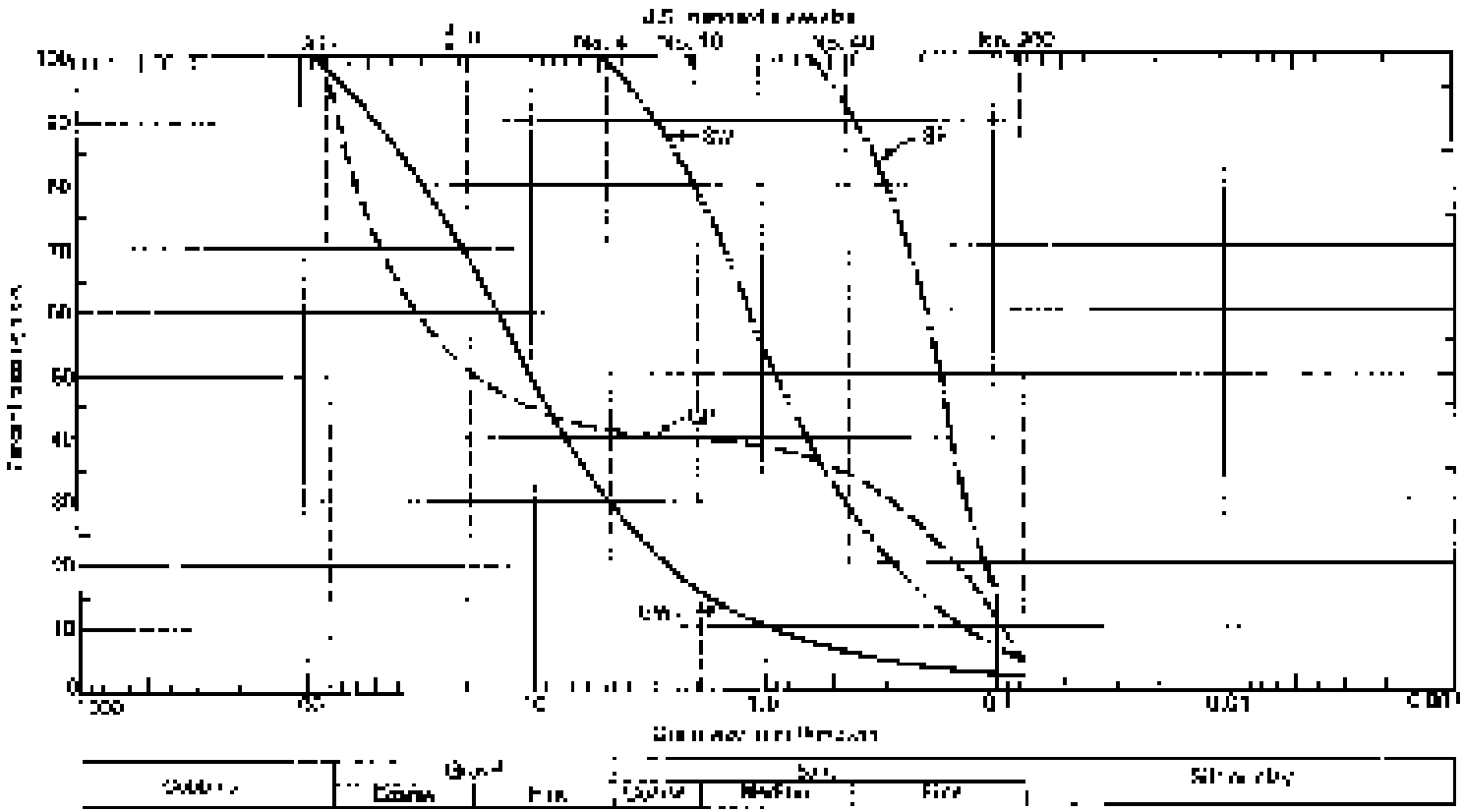

Figure 2-8 Typical gradation curves for coal-segregated soils (U.S. Army Engineer Waterways

Table 2-3 AASHTO system of soil classification according to usefulness of HIGWAY Americans

	Group Number										
	A-7			A-2							
	A-1-a	A-1-b	A-2-4	A-2-5	A-2-6	A-2-7	A-3	A-4	A-5	A-6	A-7
Percentage passing											
No. 10 sieve	50 max.										
No. 40 sieve	30 max.	50 max.					51 min.				
No. 200 sieve	15 max.	25 max.	35 max.	35 max.	35 max.	35 max.	10 max.	36 min.	36 min.	36 min.	36 min.
Characteristics fraction											
Liquid limit	6 max.	6 max.	40 max.	41 min.	40 max.	41 min.		40 max.	41 min.	40 max.	41 min.
Plasticity index			10 max.	10 max.	11 min.	11 min.		10 max.	10 max.	11 min.	11 min.
Typical material	Stone fragments and sand			Silty or clayey sand or gravel			Fine sand	Silt	Silt	Clay	Clay

as seen by the table above. The sand, 20% of the soil by weight, is far greater than the No. 200 sieve, which is a coarse grained soil. The coarse particles are fairly uniform in size, ranging from medium to fine sand. However, a wide range of gradation (or variety) is larger than 4 times the smallest sample is smaller than the No. 200 sieve, the second one has a larger percentage in size distribution. Thus, it is either well graded (WG) or poorly graded (PG). If more than 15% of the sample is smaller than the No. 200 sieve, the second one has a larger percentage of fines, which is the case in the table.

If the sample is fine grained (more than 50% by weight smaller than the No. 200 sieve), consistency is tested for the dry strength and shaking tests of a ball of soil that is 1/2 in. (13 mm) in diameter.

Dry Strength Test

Mold a sample into a ball about the size of a golf ball. Add the amount of water sufficient to make the sample easily workable. Allow the sample to dry completely. Attempt to break the sample using the thumb and forefingers of one hand. If the sample cannot be broken, it will be highly plastic. If the sample can be broken by applying pressure with the thumb and forefingers of one hand, it is medium plastic. If the sample can be broken and reduced to powder easily, it is low plastic. Silt and clay will have dry strength and powder easily.

Shaking Test

Form a moist ball as described above. Place the ball in the palm of the hand and shake it. If the sample does not change, no fingers will be needed. If the sample is fine grained, the hand will become slightly moist. Observe the speed with which water appears on the surface of the sample to produce a shiny surface. A quick reaction indicates a low plastic silt.

Construction Characteristics of Soils

Some important construction characteristics of soil are classified under the Unified System. These are summarized in Table 2-4.

2-4 SOIL VOLUME-CHANGE CHARACTERISTICS

Soil Conditions

There are three principal conditions under which expansive soil may exist. These are [illegible] the ranges of [illegible] are as follows:

- *Bank.* Material in its natural state before disturbance. Often referred to as in place or in situ. A bank volume is identified as a bank cubic yard (BCY) or a bank cubic meter (BCM).
- *Loose.* Material that has been excavated or loosened. A loose volume is identified as a loose cubic yard (LCY) or a loose cubic meter (LCM).
- *Compacted.* Material that is in a fill. A compacted volume is identified as a compacted cubic yard (CCY) or a compacted cubic meter (CCM).

Table 2–4 Construction characteristics of soils (Unified System)

Soil Type	Symbol	Drainage	Construction Workability	Suitability for Subgrade (No Frost Action)	Suitability for Surfacing
Well-graded gravel	GW	Excellent	Excellent	Good	Good
Poorly graded gravel	GP	Excellent	Good	Good to excellent	Poor
Silty gravel	GM	Poor to fair	Good	Good to excellent	Fair
Clayey gravel	GC	Fair	Good	Good	Excellent
Well-graded sand	SW	Excellent	Excellent	Good	Good
Poorly graded sand	SP	Excellent	Fair	Fair to good	Poor
Silty sand	SM	Poor to fair	Fair	Fair to good	Fair
Clayey sand	SC	Fair	Good	Good to fair	Excellent
Low plasticity silt	ML	Poor to fair	Fair	Poor to fair	Poor
Low plasticity clay	CL	Poor	Fair to good	Poor to fair	Fair
Low plasticity organic	OL	Poor	Fair	Poor	Poor
High plasticity silt	MH	Poor to fair	Poor	Poor	Poor
High plasticity clay	CH	Very poor	Poor	Poor to fair	Poor
High plasticity organic	OH	Very poor	Poor	Very poor to poor	Poor
Peat	Pt	Poor to fair	Unsuitable	Unsuitable	Unsuitable

Swell

Soil is increased in volume when it is excavated to expose the soil and increase its internal drainage. Consolidation and stability of soil improve considerably. Soil is compacted in the field to a density more than the unit volume of the excavation. This phenomenon is called swell. Swell may be calculated as follows:

$$\text{Swell (\%)} = \left[\left(\frac{\text{Weight/cm}^3\text{ in volume}}{\text{Weight/cm}^3\text{ in new volume}}\right) - 1\right] \times 100 \qquad (2\text{–}4)$$

EXAMPLE 2–1

Find the swell of a soil that weighs 2700 kilograms per cubic meter in its natural state and 2000 kilograms per cubic meter after its excavation.

SOLUTION

$$\text{Swell} = \left[\left(\frac{2700}{2000}\right) - 1\right] \times 100 = 35\% \qquad (\text{Eq. 2–4})$$

$$= \left[\left(\frac{1800}{1200}\right) - 1\right] \times 100 = 50\%$$

Hence, if a truck of 10 cubic meters capacity is used to haul loose soil, it will be equivalent to hauling 15 cubic meters of compacted soil.

Figure 2–2 Typical soil volume changes during earthmoving.

Shrinkage

When a soil is compacted, some of the voids in the soil are filled and the soil's volume shrinks. As a result, the soil will occupy less volume than it did under either the natural or loose conditions. This phenomenon, which is the reverse of swell, is commonly called shrinkage. The value of shrinkage may be determined as follows:

$$\text{Shrinkage (\%)} = \left(1 - \frac{\text{Weight-to-volume ratio}}{\text{Weight-to-compacted-volume ratio}}\right) \times 100 \qquad (2\text{–}5)$$

Soil volume changes caused by excavation and compaction are illustrated in Figure 2–2. Keep in mind that both swell and shrinkage are calculated from the weight-to-volume ratio.

EXAMPLE 2–2

Find the shrinkage of a soil that weighs 2800 lb/cy (1661 kg/m³) in its natural state and 3500 lb/cy (2077 kg/m³) after compaction.

SOLUTION

$$\text{Shrinkage} = \left(1 - \frac{2800}{3500}\right) \times 100 = 20\% \qquad \text{(Eq. 2–5)}$$

$$\left[= \left(1 - \frac{1660}{2077}\right) \times 100 = 20\%\right]$$

Hence 1 cubic yard (loose) of material will shrink to 0.8 compacted cubic yard (m³) when it is compacted.

Load and Shrinkage Factors

In performing earthmoving calculations, it is important to consider the effect of material volumes in accommodating the loose material. Although the bank cubic yard or meter is most commonly used

For this purpose, any of the three volumes mentioned may be used. A given load of material is the volume that specified in the bills of lading or in a contract covering earthwork. It may be any of the three volumes units.

Because soil material and bank volumes are commonly expressed in cubic meters, it is convenient to have a conversion factor to simplify the conversion of loose volume to bank volume. The factor used for this purpose is called a "load factor" and it may be calculated by using Equation (2-6) or (2-7). Loose volume is multiplied by the load factor to obtain bank volume.

$$\text{Load factor} = \frac{\text{Weight per unit loose volume}}{\text{Weight per unit bank volume}} \qquad (2\text{-}6)$$

or

$$\text{Load factor} = \frac{1}{1 + \text{swell}} \qquad (2\text{-}7)$$

A shrinkage factor is a conversion of bank volume to compacted volume in soil mechanics and is a shrinkage factor. The shrinkage factor may be calculated by using Equation (2-8) or (2-9). Bank volumes may be multiplied by the shrinkage factor to obtain compacted volume. Conversely, compacted volume may be divided by the shrinkage factor to obtain bank volume.

$$\text{Shrinkage factor} = \frac{\text{Weight per unit bank volume}}{\text{Weight per unit compacted volume}} \qquad (2\text{-}8)$$

or

$$\text{Shrinkage factor} = 1 - \text{shrinkage} \qquad (2\text{-}9)$$

EXAMPLE 2-3

A soil weighs 1950 kg/m³ (3,300 lb/yd³), 960 kg/m³ (1,620 lb/yd³) in its loose state and 2,000 kg/m³ (3,400 lb/yd³) in its bank state. (a) Find the load factor and shrinkage factor for the soil. (b) How many bank cubic yards (BCY) are needed (BCM), and how many cubic yards (CCY) are needed (CCM), to construct an 1 million loose cubic yards (900 000 LCM) embankment?

SOLUTION

$$\text{(a) Load factor} = \frac{1950}{2000} = 0.97 \qquad (2\text{-}7)$$

$$= \frac{1/0}{1+0.3} = 0.79$$

$$\text{Shrinkage factor} = \frac{2000}{2400} = 0.83 \qquad (2\text{-}9)$$

$$\left[= \frac{0.3}{1+0.3} = 0.83 \right]$$

b) Bank volume = 1,000,000 × 0.70 = 700,000 [illegible]

592,000 × 0.90 = 532,800 [illegible]

Compacted volume = 700,000 × 0.80 = 560,000 [illegible]

[illegible] × 0.90 = [illegible] [illegible]

Typical values of unit weight, swell, shrinkage, load factor, and shrinkage factor for some common materials are given in Table 2–5.

Table 2–5 Typical soil weight and volume change characteristics[a]

	Unit Weight (lb/cu yd [kg/m³])			Swell (%)	Shrinkage (%)	Load Factor	Shrinkage Factor
	Loose	Bank	Compacted				
Clay	[illegible]	[illegible]	[illegible]	[illegible]	[illegible]	[illegible]	[illegible]
Common earth	[illegible]	[illegible]	[illegible]	[illegible]	[illegible]	[illegible]	[illegible]
Rock, blasted	[illegible]	[illegible]	[illegible]	[illegible]	[illegible]	[illegible]	[illegible]
Sand and gravel	[illegible]	[illegible]	[illegible]	[illegible]	[illegible]	[illegible]	[illegible]

[a] Values are approximate and vary with moisture content, gradation, and other factors. Tests should be conducted to determine more precise values for a specific project.
[b] Compacted soil is based on 90% of bank density.

2–5 SPOIL BANKS

When planning an excavation project, it is necessary to determine the size of the pile of material that will be created by the excavation. Moved from the excavation site, the pile of material is simply referred to as a "spoil" bank. Spoil banks are characterized by a triangular cross section. If the material is dumped from a dump truck, a conical pile is created which resembles a cone. To determine the dimensions of spoil banks or piles, it is first necessary to calculate the volume of excavation from equipment capacities (BCY or LCY) or by hand calculations. LCY or BCY, for the pile dimensions may then be calculated using Equations (2–13). If the soil's angle of repose is known, [illegible]

[illegible] is the angle that the sides of a spoil bank or pile naturally form with the horizontal when unconsolidated soil is dumped onto the site. The angle of repose relates repose to the [illegible] and the soil's physical characteristics such as moisture content. Typical values of angle of repose for some soils are given in Table 2–6.

Table 2–6 Typical values of angle of repose of excavated soil

Material	Angle of Repose (deg)
Clay	30
Common earth, dry	35
Common earth, damp	37
Gravel	35
Gravel, dry	35
Sand, dry	37

Triangular Spoil Bank

$$\text{Volume} = \text{Area of cross section} \times \text{Length} \tag{2–10}$$

$$H = \left[\frac{2V}{L \times \tan\beta}\right]^{\frac{1}{2}}$$

$$V = \frac{H \times L \times H}{2} \tag{2–11}$$

where β = [illegible]
H = pile height (m, ft)
L = pile length (m, ft)
β = angle of repose (deg)
V = pile volume (m³, ft³)

Conical Spoil Pile

$$\text{Volume} = \frac{1}{3} \times \text{Base area} \times \text{Height}$$

$$H = \frac{(3V)^{\frac{1}{3}}}{(\tan\beta)^{\frac{1}{3}}} \tag{2–12}$$

$$D = \frac{H}{2} \times \tan\beta \tag{2–13}$$

where D = [illegible] diameter of the pile base (m, ft)

EXAMPLE 2–4

Find the base width and height of a triangular spoil bank containing 100 BCY (76.5 BCM) [illegible] pile length is 300 ft (91.44 m), the soil's angle of repose is 37°, and it is [illegible]

SOLUTION

$$\text{Cone volume} = 25 \times 100 \times 1.25 = 3125\ \text{cu ft}$$

$$= 7.62 \times 1.25 = 9.5\ \text{m}^3$$

$$\text{Base width} = \left[\frac{4 \times 3.75}{\pi \times 1.5}\right]^{\frac{1}{2}} = 2.1\ \text{m} \qquad (\text{Eq. 2-10})$$

$$\left[\left[\frac{4 \times 9.5\ \text{m}^3}{\pi \times 1.4 \times 100\ \text{m}^3}\right]^{\frac{1}{2}} = 2.45\ \text{m}\right]$$

$$\text{Height} = \frac{2.1}{2} \times 100\ \text{m} = 105\ \text{m} \qquad (\text{Eq. 2-11})$$

$$\left[= \frac{2.45}{2} \times 100\ \text{m} = 122.5\ \text{m}\right]$$

EXAMPLE 2-5

Find the base diameter and height of a conical spoil pile that will contain 10,000 cu yd (7,650 m³) of material, if the soil's angle of repose is 32° (use the smaller value).

SOLUTION

$$\text{Cone volume} = 10{,}000 \times 1.2 = 12{,}000\ \text{cu yd}$$

$$[= 7{,}650 \times 1.2 = 9{,}180\ \text{m}^3]$$

$$\text{Base diameter} = \left[\frac{4 \times 12{,}000}{\pi \times 1.5}\right]^{\frac{1}{2}} = 101.0\ \text{ft} \qquad (\text{Eq. 2-10})$$

$$\left[= \left[\frac{4 \times 9{,}180}{\pi \times 1.4}\right]^{\frac{1}{2}} = 91.6\ \text{m}\right]$$

$$\text{Height} = \frac{101.0}{2} \times \tan 32° = 31.4\ \text{ft} \qquad (\text{Eq. 2-11})$$

$$\left[= \frac{91.6}{2} \times \tan 32° = 28.7\ \text{m}\right]$$

2-6 ESTIMATING EARTHWORK VOLUME

When planning or estimating construction projects it is often necessary to estimate the volume of material to be excavated or graded to fill. The procedures are influenced by several variables, principal amongst which are the shape of the spoil, relatively [illegible] flow such as that required for basements and trenches, the geotechnical nature of the soil, its bulk and the [illegible] involved in handling relatively large masses. The [illegible] engineering formulas of the [illegible] are described in the following sections.

[illegible]

[illegible]

Pit Excavations

[illegible]

$$\text{Volume} = \text{Horizontal area} \times \text{Average depth} \qquad (2\text{–}84)$$

[illegible]

EXAMPLE 2–8

[illegible]

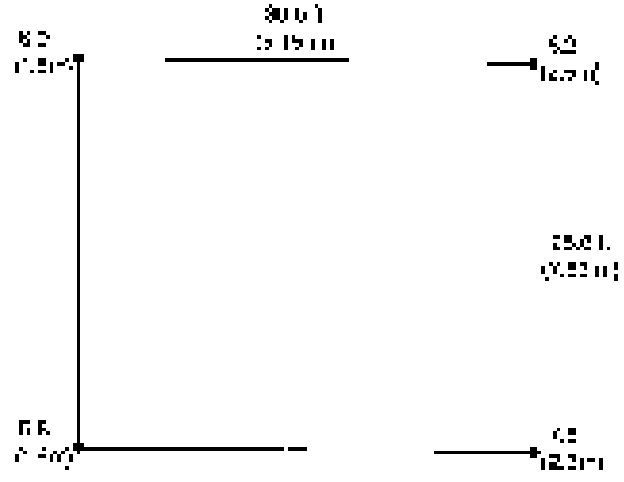

Figure 2–3 Figure for Example 2–8.

SOLUTION

$$\text{Area} = [illegible] \times [illegible] = [illegible]\ \text{sq ft}$$

$$= [illegible] = [illegible] = [illegible]\ \text{m}^2$$

$$\text{Average depth} = \frac{[illegible] + 8.2 + [illegible] + 5.4}{[illegible]} = [illegible]\ \text{ft}$$

$$= \frac{1.8 + 2.5 + [illegible] + 1.5}{4} = 2.1\ \text{m}$$

$$\text{Volume} = \frac{[illegible] \times [illegible]}{[illegible]} = [illegible]\ \text{BCY}$$

$$= [illegible] \times [illegible] = [illegible]\ \text{BCM}$$

Trench Excavations

The volume of excavation results from trench cross-sectional area multiplied by the product of the trench cross-sectional area and the linear distance along the trench from Equation 2-15. For rectangular trench sections where the trench depth and width are relatively constant, trench volume can be found simply by the product of trench width, depth, and length. When trench sides are sloped or very irregular in width or depth, cross-sections should be taken at regular linear intervals and the volumes between intervals computed. These volumes are then added to obtain total trench volume.

$$\text{Volume} = \text{Cross sectional area} \times \text{Length} \qquad (2\text{-}15)$$

EXAMPLE 2-7

Find the volume (bank measure) of excavation required for a trench 6 ft (1.83 m) wide, 6 ft (1.83 m) deep, and 300 ft (152 m) long. Assume that the trench sides will be approximately vertical.

SOLUTION

$$\text{Cross sectional area} = [illegible] \times 6 = [illegible]\ \text{sq ft}$$

$$= [illegible] \times 1.83 = [illegible]\ \text{m}^2$$

$$\text{Volume} = \frac{[illegible] \times 300}{27} = [illegible]\ \text{BCY}$$

$$= [illegible] \times [illegible] = [illegible]\ \text{BCM}$$

Large Areas

[illegible]

$$\text{Average depth} = \frac{\text{Sum of products of depth} \times \text{Weight}}{\text{Sum of weights}} \qquad (2\text{-}10)$$

EXAMPLE 2–8

[illegible]

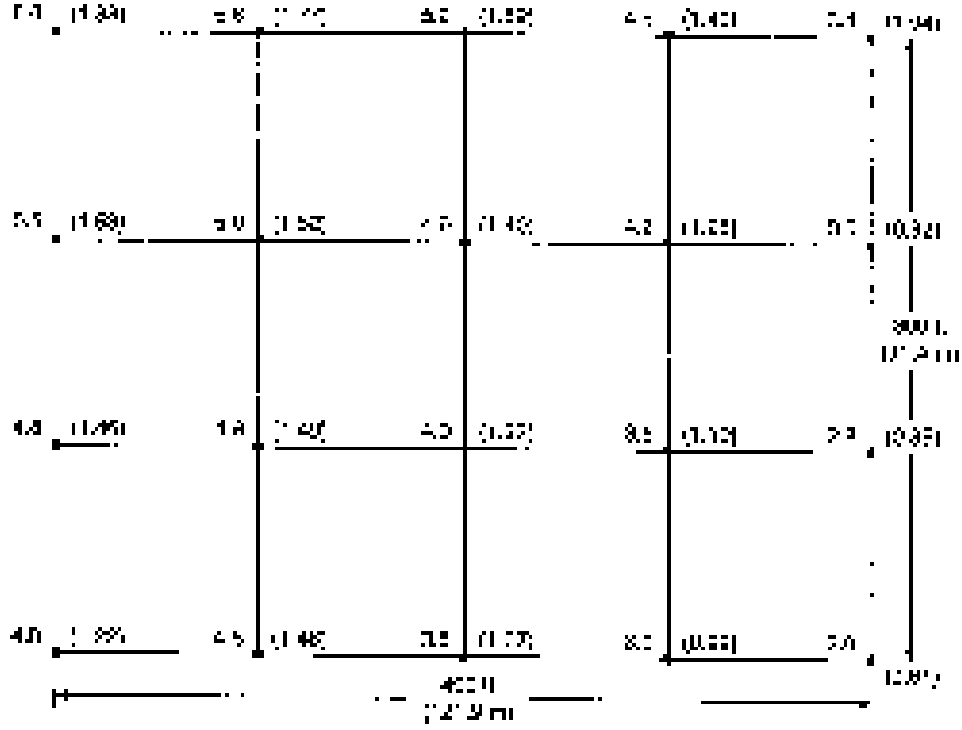

Figure 2-4 [illegible] for Example 2-8.

SOLUTION

$$\text{Cumulative points} = 6.0 + 5.4 + 5.0 + 4.0 = 20.4$$

$$[= 1.50 + 1.35 + 1.25 + 1.00 = 5.10]$$

$$\text{Discrete points} = 5.8 + 5.2 + 4.8 + 4.0 = 20.8$$

$$= 1.45 + 1.30 + 1.20 + 1.00 = 5.15$$

$$[= 1.45 + 1.30 + 1.20 + 1.00 + 0.95 + 0.85 + 0.75 + 0.65 + 0.55 + 0.45 = 10.20]$$

$$\text{Line segments} = 5.8 + 4.6 + 4.2 + 4.0 + 4.0 + 3.6 = 26.2$$

$$= 1.45 + 1.15 + 1.05 + 1.00 + 1.00 + 0.90 = 6.55$$

$$\text{Average ordinate} = \frac{(5.8 + 2(4.6) + 4.2 + 2(4.0) + 3.6)}{12} = 4.37$$

$$= \frac{(4.35 + 2(3.45) + 3.15 + 2(3.00) + 2.70)}{24} = 3.31$$

$$\text{Area} = 20 \times 40 = 800 \text{ sq ft}$$

$$[= 31.4 \times 25.5 = 800.7 \text{ ft}^2]$$

$$\text{Volume} = \frac{800 \times 4.37}{27} = 129.6 \text{ cu yd}$$

$$[= 0.1143 \times 3.31 = 0.3783 \text{ m}^3]$$

2–7 CONSTRUCTION USE OF THE MASS DIAGRAM

A mass diagram is a continuous curve representing the accumulated volume of earthwork plotted against the linear profile of a roadway or airfield. Mass diagrams are prepared by highway and airfield designers to assist in selecting an alignment which minimizes the earthwork required for construction. The facility waste material and fill needs for roadway grade and curvature. Since the mass diagram is intended as a management tool, it must normally provide information relative to cost of a proposed airfield or highway. However, the mass diagram can provide very useful information for the construction management and is usually constructed by the contractor upon request. A typical mass diagram and corresponding roadway profile are illustrated in Figure 2-5.

Characteristics of a Mass Diagram

Some of the principal characteristics of a mass diagram include the following:

- The cumulative ordinate of the mass diagram corresponding to any location on the roadway profile represents the cumulative earthwork volume from the origin to that point.

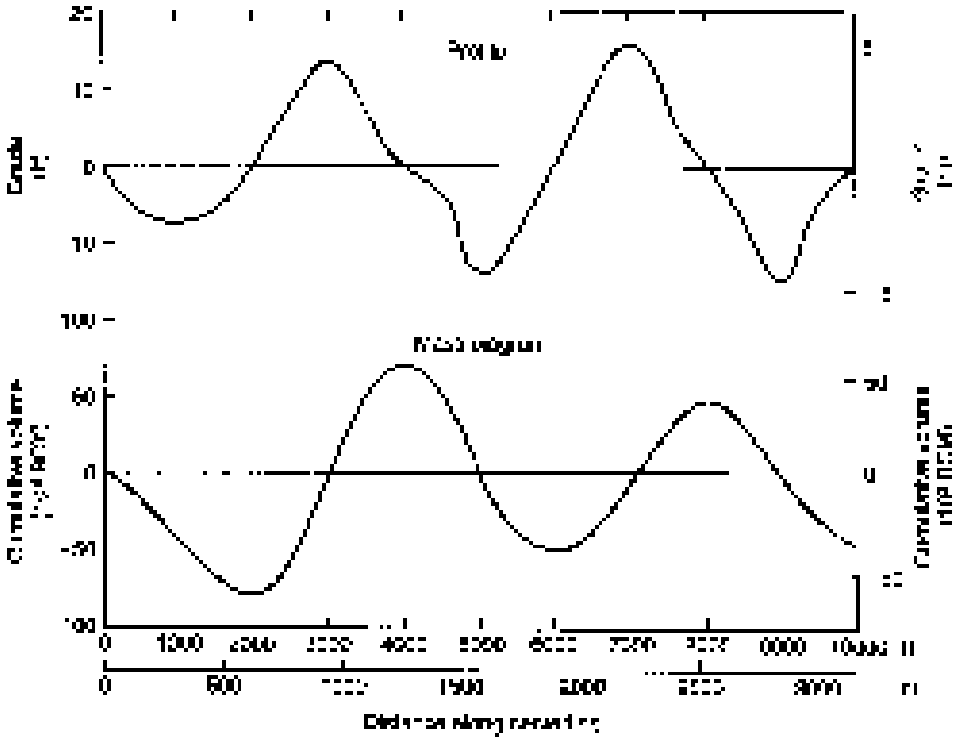

Figure 2-5 A mass diagram.

- When a curve rises, material moves from left to right.
- When a curve falls, the material moves from right to left.
- A peak on the curve represents a point where the earthwork changes from cut to fill.
- A valley (low point on the curve) represents a point where the earthwork changes from fill to cut.
- When a horizontal line intersects the curve at two or more points, the volume of cut and fill at these points are equal. Such a line represents a balance line on the diagram.

Using the Mass Diagram

Some of the information which a mass diagram can provide is contained in the following paragraphs.

- The length and direction of haul within a proposed section.
- The average length of haul for a designated section.
- The location and distance between measured haul routes from a borrow pit and waste (fill) material, including haul routes established for an project.

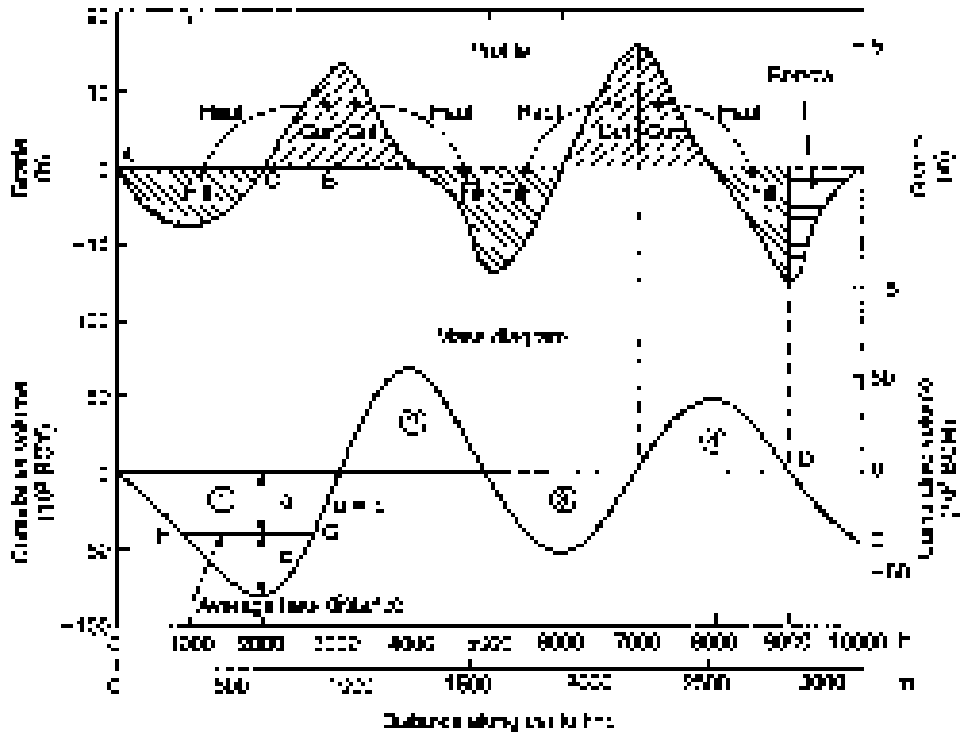

Figure 2–6 Construction of a mass diagram.

The following explanation of earthwork construction information from a mass diagram will be illustrated using Figure 2–6.

1. For a balanced section (section 1 in the figure), project the end points of the section (points A and B). These points identify the limits of the balanced section.
2. Locate point C on the profile corresponding to the lowest point on the mass diagram within section 1. This is the point at which the direction of haul changes from [illegible] to [illegible]. The area accumulated [illegible] now be used for fill on the profile.
3. The check on fill at this balanced section is always [illegible] fill.
4. Repeat this process for sections 2, 3, and 4 as shown.
5. Since the mass diagram has a negative value from point D to the end, the entire area from D to [illegible] (38,230 BCY) represents the volume of borrow which must be brought in from a borrow pit to complete the earthwork balance.
6. The approximate average haul distance for each section can be found as the length of a horizontal line between midway points on the section and the peak or valley of the curve for the section. Thus, the length of the line E–G represents the average haul distance for section 1, which is 1800 ft or 0.34 mi.

PROBLEMS

1. Calculate the volume of concrete in the kiln in the plant for the [illegible] shown in Figure 2-7. Take the kiln diameter as [illegible] m.

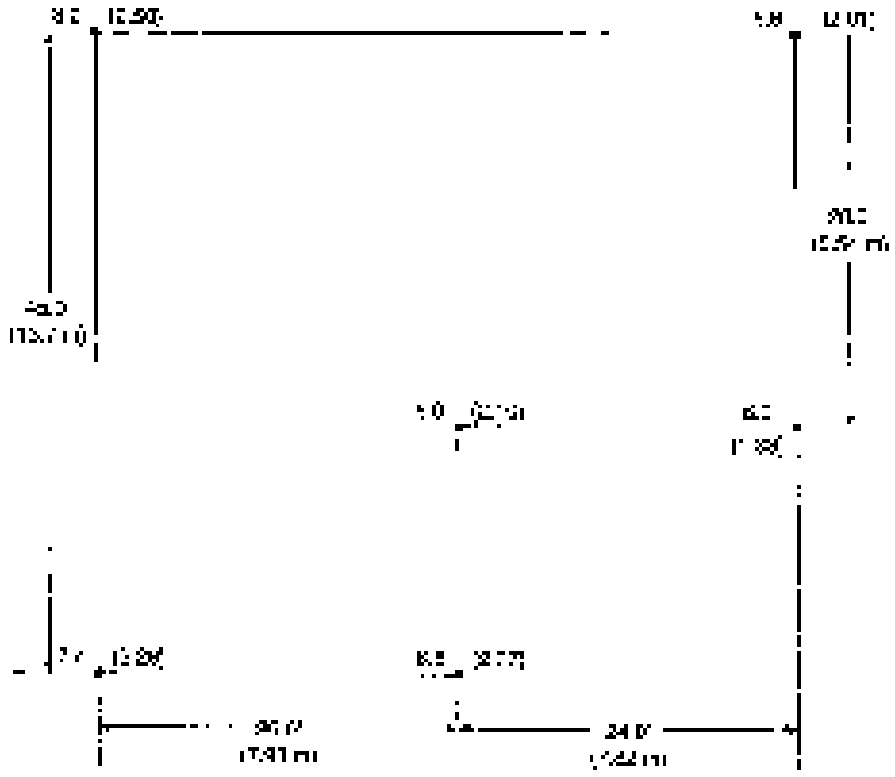

Figure 2-7

2. A 100% [illegible]-ton-per-day operation requires an excess air of [illegible] to [illegible] percent. If the [illegible] contains [illegible] percent, what size [illegible] will be the excess air?

3. In making a [illegible] qualification test of a coal, you find that [illegible] 50% by weight of the coal fraction is less than [illegible] in diameter. The coal fraction of the [illegible] has [illegible] strength and gives a [illegible] speed [illegible] in the classifying [illegible] greatly increased. Is the [illegible] Explain?

4. [illegible] of a building is [illegible] of 2 [illegible] 22.2 m² [illegible] roofing [illegible] roofing. The roof's angle of repose is 35° and is [illegible] 30%. [illegible] height and width of the triangular [illegible] back [illegible] roof [illegible]

5. How many [illegible] trucks landing at [illegible] volume of [illegible] LCY [illegible] LCY) would be required [illegible] Section 2 [illegible]

6. Using [illegible], how many [illegible] would you expect [illegible]

7. Use the [illegible] of Figure [illegible] to find the following values.
   a. The [illegible]
   b. The [illegible]

8. [illegible]

9. [illegible]

10. [illegible]

REFERENCES

1. [illegible] Wiley, 1993.
2. [illegible] McGraw-Hill, 1987.
3. [illegible]
4. [illegible]
5. [illegible]
6. [illegible]
7. [illegible]
8. [illegible] Lexington, KY.

3

Excavating and Lifting

3–1 INTRODUCTION

Excavating and Lifting Equipment

An excavator is defined as a power-driven digging machine. The main types of construction equipment for moving materials include hydraulic excavators and members of the cable operated machine family, which include draglines, hoes, and clamshells. Power loaders and compactors are also used as excavators. In this chapter we focus on high production excavators and the machines of these machine families. Many of these excavators and compactors are used in earthwork operations. Operations involving the lower horizon are considered in detail in Chapter 4. Special construction methods involved in rock excavation are considered in Chapter 5.

Excavators and Crane-Shovels

In 1836, William S. Otis developed a machine that mechanically duplicated the motion of a laborer digging with a hand shovel. From this humble beginning, a family of earth-moving construction machines known as shovels evolved. Members of this family include the shovel, backhoe, dragline, clamshell, and hoe, all of which are cable operated.

While cable excavators (Figure 3–1) have largely replaced the cable-operated crane-shovel, family members functionally similar to hydraulic machines are widely used during the first half of the twentieth century. The additional use of hydraulic machines was due to operation in a wide range of soil conditions, higher bucket penetration forces, more accurate digging, and more precise control. Hydraulic telescoping booms and dippers are also available. The major remaining cable operated machines based on the original crane-shovel are the dragline and the mobile hoe. Other machines are:

Some of these attachments are also available for hydraulic excavators. Their use is not widespread.

Grapple. Replaces the bucket and is used to handle scrap, logs, and other materials.

Auger. Drills holes for trees, posts, etc., such as in utility and other improvement projects.

Hammer. Demolishes boulders and old structures by repeated impacts.

Figure 2-4 Hydraulic excavation (Courtesy of Volvo Construction Equipment North America, Inc.)

Trenchless excavation Vibratory hammers and hydraulic spade and rock breakers are also called multipurpose machines or multiprocessor machines. Similar to the jackhammer shown in Figure 2-4c, these machines are capable of performing a variety of operations, depending on the attachment. Some machines are equipped with a horizontal excavation tool.

Backfill and compaction Amphibious and small tracked and flat relative machines are used for aggregate and high-volume backfill.

Trench stabilization Patterns like the connecting rods in Section 2.5, plastic and aluminum sheets, wire shutters, and steel plates may be used for shoring.

Bucket, dragline. Used in the dragline. The dragline is a crane with a bucket suspended from a boom while its cable is used to pull the empty bucket back to the excavation.

Bucket, grapple. See Grapple.

Bucket, shovel. Used for excavating and loading, usually performed by a crane.

Bucket, [illegible]. A flat-bottomed bucket used for removing the loosening pavement, slab.

Bucket, tipper. The bucket sides and corner inclination is a tipper bucket to break up lumps and clumps.

Bucket, [illegible]. A bucket with a flat bottom and tapered sides to reduce the chance of soil sticking in.

Bucket, [illegible]. Can be used for grading, slope and [illegible].

Compression plate hoisting. See Section [illegible] and Figure [illegible].

Compression shoe. See Section 5.2 and Figure 5.8.

Counterweight. Provides equilibrium of all elements.

Crane, [illegible]. Mounted on the end of the crane to hold blast holes.

Grapple. Includes a clamp, jaws and [illegible] for handling rocks, logs, and other materials.

Pile. A wooden or steel member used for driving and extracting piles; see Section [illegible].

Shoe. Edge is used for passive earth and [illegible] for demolition.

Wheel. See [illegible]. Attached to hydraulic to provide a hoist capability. Pulley [illegible] when not needed.

Backhoes and crane shovels consist of three major assemblies: a crawler or tire mounting, a revolving superstructure containing the power and controls, and the operating equipment, including a boom and a bucket. The use of tire or crawler, track and wheel mounting is shown in Figure [illegible]. The crawler mounting provides excellent mobility and low ground pressure, while the tire mounting is less mobile but more suitable for [illegible] surfaces over short distances. Track mountings are [illegible] and [illegible] the center of gravity, [illegible]. Wheel mountings, on the other hand, rely on single [illegible] to center both the center of gravity and the [illegible]. Track mountings are capable of high-speed travel of [illegible] per hour or more, whereas wheel mountings are [illegible] to [illegible] per hour.

In this chapter we discuss the principles of operation, methods of employment, and techniques for estimating the performance of shovels, backhoes, cranes, and draglines. Cranes and their employment are also discussed. Pile drivers and their employment are covered in Chapter 10.

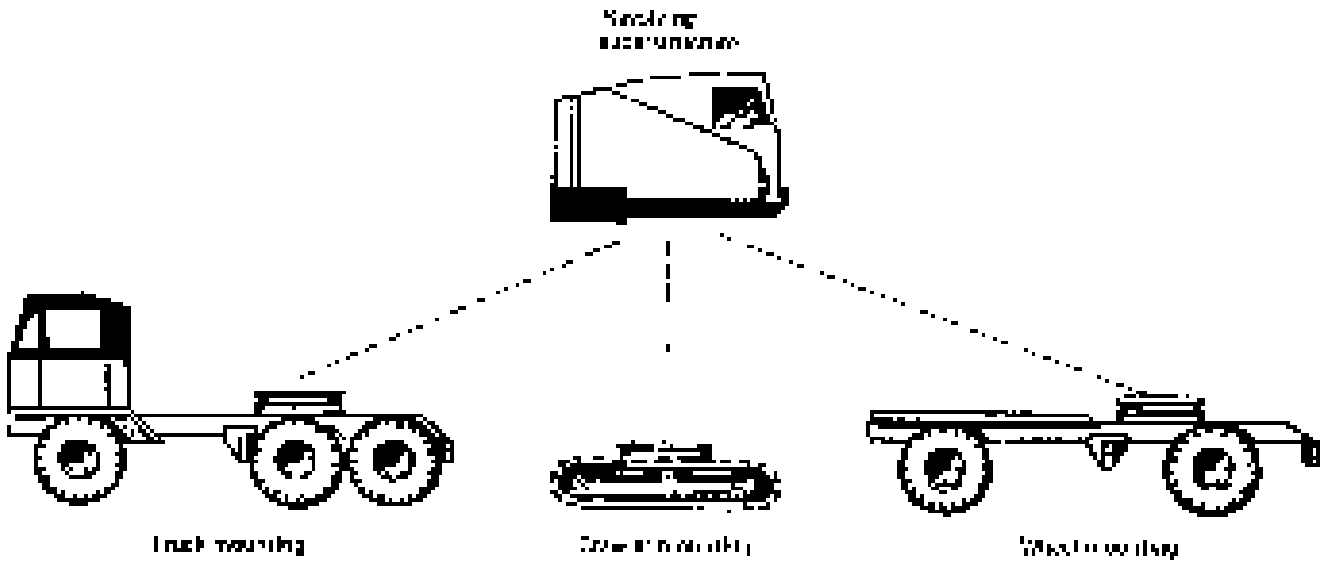

Figure 3–7. Crane's rear mounting and revolving superstructure. (U.S. Department of the Army)

Table 3–1 Bucket-capacity rating methods

Machine	Rated Bucket Capacity
Backhoes and loaders	
Crawler	Struck volume
Hydraulic	Heaped volume at 1:1 angle of repose
Wheeled	Heaped volume at 2:1 angle of repose
Draglines and clamshells	95% struck volume
Loader	Heaped volume at 2:1 angle of repose

Excavator Production

[illegible] the volume of material actually contained in the bucket. The methods by which excavator buckets and loader buckets are rated are given in Table 3–1. Bucket capacity is the volume contained within the bucket when following the manufacturer's specifications for bucket capacity when the bucket is filled with the bucket teeth. Bucket capacity assumes a level of material flush with the front edge of the bucket (i.e., the material level is even with the wear level that would result if the bucket were filled with water). Heaped volume is the maximum volume that can be placed in the bucket, although it is specifically appropriate for the material in the bucket.

Since bucket manufacturers usually quote struck volume, bucket capacity based on struck volume, it is often assumed that the capacity of the excavator will correspond to the size of the soil. This is not strictly true, since it would be assumed to actually fill the bucket with material. A better estimate of the volume of material in the bucket will be obtained if the actual bucket volume is multiplied by a bucket-fill factor. Suggested values are based on the soil type and are given in Table 3–2. A more accurate estimate of bucket loading is obtained by multiplying the heaped bucket volume by the bucket-fill factor. Finally, the actual volume of material in the bucket is obtained by multiplying the loose volume by the swell factor. This procedure is illustrated in Example 3–1.

Table 3–2 Bucket-fill factors for excavators

Material	Bucket Fill Factor
Dry loam earth, loam	0.85–1.10
Sandy and gravel	0.80–1.00
Hard clay	0.75–0.90
Wet clay	0.50–0.80
Rock, well blasted	0.70–0.90
Rock, poorly blasted	0.40–0.70

EXAMPLE 3-1

[illegible]

SOLUTION

[illegible]

3-2 HYDRAULIC EXCAVATORS

Operation and Employment

[illegible]

The components of a typical hydraulic excavator are shown in Figure 3-3. It consists of a [illegible] and lower by hydraulic cylinders. To facilitate the digger is mounted on the digger [illegible] is provided.

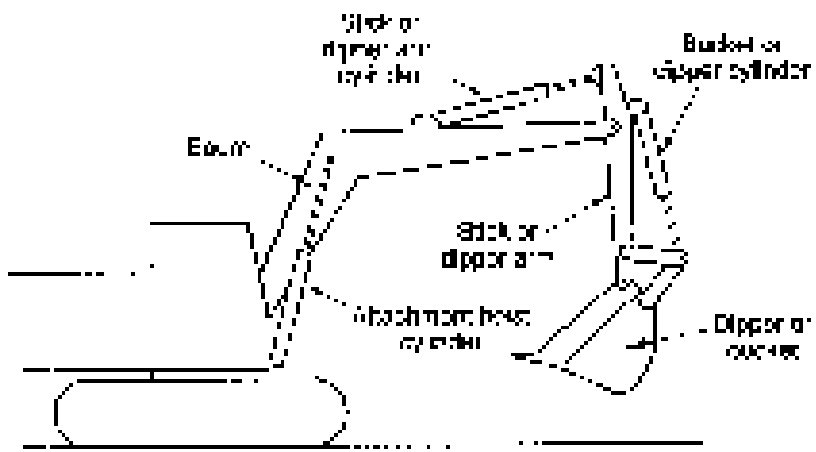

Figure 3-3 Components of a hydraulic excavator or backhoe.

When the trench is filled, [illegible] equipment is set up to reduce spillage and [illegible] and swing of the excavating [illegible]. The trench is then [illegible] by swinging the dipper and [illegible] from the machine.

[illegible] is very utilized for trenching work. In addition to excavating [illegible] pattern [illegible] such as [illegible] placing pipe, pulling [illegible] the best [illegible] is the [illegible] pipe, [illegible] and [illegible] the [illegible] Equipment [illegible] are available in a wide range of [illegible] sizes. Side cutters [illegible] available [illegible] trenching [illegible]. Other [illegible] include [illegible] including [illegible], [illegible], [illegible] and [illegible].

A special [illegible] is [illegible] which [illegible] of [illegible] [illegible] Because of [illegible] [illegible] are [illegible] of [illegible] digging, [illegible], [illegible], [illegible] and [illegible] pipe [illegible].

The [illegible] equipment [illegible] and is the [illegible] equipment [illegible]. [illegible] [illegible] [illegible]

Figure 3–5 [illegible] of JCB [illegible]

[illegible] 7 in 15 in 2 [illegible] 6 [illegible] 2[illegible] in 10 [illegible] [illegible] very useful for excavating [illegible] spaces. [illegible] 360-degree swing, [illegible] ground pressure [illegible] [illegible] backhoe [illegible] [illegible] with [illegible] loads, they may also be employed [illegible] backfilling and [illegible] jobs [illegible]

Production Estimating

No production [illegible] has [illegible] but [illegible] However, production may be [illegible] using Equation 3–1 together with Tables 3–[illegible] 3–4, which have been prepared from [illegible] data.

$$\text{Production (CYdh)} = C \times S \times V \times H \times E \qquad (3\text{–}1)$$

where C = cycle/h (Table 3–3)

S = swing [illegible] (Table 3–[illegible])

V = heaped [illegible] volume (CY or LCM)

H = hours [illegible] (Table 3–[illegible])

E = job efficiency

In [illegible] the bottom [illegible] should be applied [illegible] production to [illegible] for the work required [illegible] that [illegible] the [illegible] [illegible] Now all [illegible] production [illegible] multiplied by the appropriate value [illegible] to [illegible] the effective [illegible]

Table 3–3 Standard cycles per hour for hydraulic excavators

Type of Material	Machine Size			
	Wheel Tractor	Small Excavator: 1 yd (0.76 m³) or Less	Medium Excavator: 1½–2½ yd³ (0.94–1.72 m³)	Large Excavator: Over 2½ yd³ (1.72 m³)
Soft (sand, gravel, soil)	120	250	200	150
Average (common earth, soft clay)	105	200	160	120
Hard (tough clay, rocky)	100	150	130	100

Table 3–4 Swing Depth Factor for Backhoes

Depth of Cut (% of Maximum)	Angle of Swing (deg)					
	45	90	75	90	120	180
10	1.33	1.25	1.21	1.15	1.06	0.75
50	1.30	1.21	1.18	1.10	1.00	0.71
75	1.18	1.12	1.05	1.00	0.94	0.69
90	1.14	1.10	0.95	0.90	0.86	0.65

EXAMPLE 3–2

Find the expected production in bank cubic yards (BCY) per hour of a small hydraulic excavator. For soil bank density is 1.[illegible] yd³/BCY (0.[illegible] m³/m³). The material is sand and gravel with a swell factor of 0.[illegible]. Job difficulty is 90 min/h. Average depth of cut is 14 ft (4.3 m). Maximum angle of swing is 120°. Operator average swing is 90°.

SOLUTION

Cycle output = 250 cycles/h (from Table 3–3)

Swing depth factor = .80 (Table 3–4)

Bucket volume = 0.75 LCY (0.57 LCY)

Bucket fill factor = 0.95

Job efficiency = [illegible] = 0.90

Production = 250 × .80 × 0.75 × [illegible] × 0.90 = [illegible] LCY/h

= 250 × .80 × 0.57 × [illegible] × 0.90 = [illegible] m³/h

Table 3-5 Adjustment factors for trench excavation

Type of Material	Adjustment Factor
Loose (sand, gravel, loam)	[illegible]
Average (common earth)	0.80–0.90
Firm (hard clay, stiff clay)	[illegible]

Job Management

In selecting the proper size of the first project, consideration must be given to the maximum depth, working space, and clearance height required. Have also for adequate clearance in the swing, superstructure, and boom during operation.

Although the excavator will accommodate a variety of attachments, including buckets and shovels, hammers, drills, lifting, piling, and earth power compactors, it is best suited to bucket and shovel operations. When other attachments are used, care must be taken that the manufacturer's safe capacity curve for the application.

3-3 SHOVELS

Operation and Employment

The hydraulic power shovel, shown in Figure 3-6, is also called a front shovel. A hydraulic power shovel consists of the major components identified in Figure 3-7. The hydraulics shown right are a combination of two and three-stage pumps. Cross illustrated in Figure 3-8. Operating forces are provided by the stick cylinder and rotation by the rotary motor in the area of the radius from point A to point B. Digging force is performed by the bucket cylinder rotating the bucket clear and engaging the earth in the vicinity of the high point B. After the bucket has penetrated and filled with material, it is pulled up to relieve space during the swing cycle.

Bucket dump and bucket crowding mechanisms are available on hydraulic shovels. The dump bucket has the advantage, generally speaking, of more reach and lift performance, but greater cost and weight. Crowding the bucket has the advantage of equal capacity, reach, and lift in all bucket positions for equal radius of reach. Hence crowding shovels usually have a slight production advantage. In addition, crowding buckets are less and require less maintenance.

Although the shovel is a mobile machine, it is not a road machine. It is most efficient when digging above track level. Crawler-mounted shovels are hydraulic excavators and display an advantage in that the shovel can be used for excavating below ground level. Since the chassis consists of a flat deck, digging cycle or ground level, it can be considered a stationary or semi-stationary machine. The shovel is the earth moving "workhorse" of the

Figure 3-6 Hydraulic shovel (Courtesy of Osbeco Construction Machinery America [illegible])

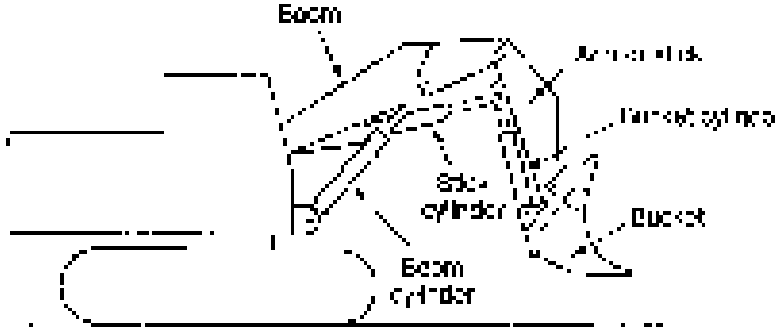

Figure 3-7 Components of a hydraulic shovel

Figure 3-8 Digging action of a hydraulic shovel.

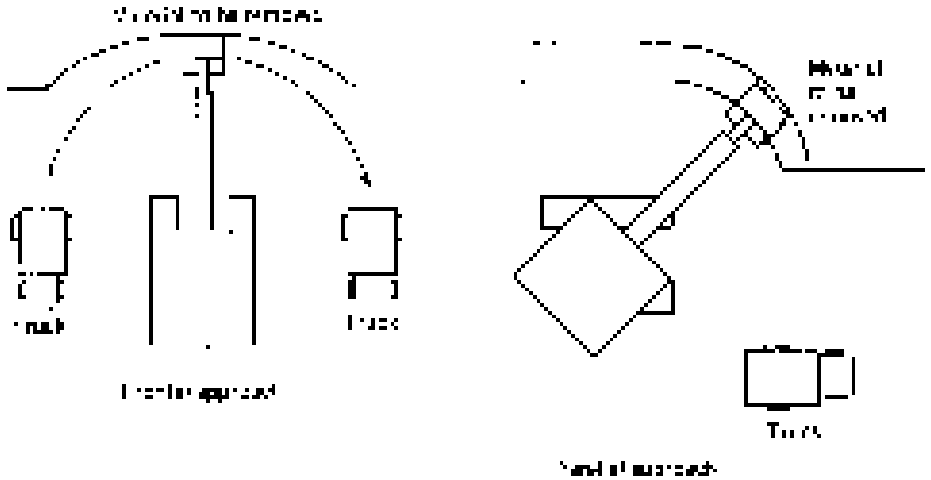

Figure 3-8 Shovel automatic methods.

[illegible]

The [illegible] shovel have a special [illegible] designed for [illegible] shovel [illegible] known as [illegible] digging force is easily focused when working in hard [illegible] When the material to be excavated is [illegible] above ground level, the shovel must [illegible] a [illegible] power from the material [illegible] free of [illegible] target is [illegible] This process is known as [illegible] Since [illegible] digging, [illegible] best obtained, the [illegible] typically designed [illegible] one of the [illegible] of attachment [illegible] illustrated in Figure 3-9. The [illegible] approach allows the most effective digging position [illegible] the shovel [illegible] the [illegible] force in this position. The [illegible] side [illegible] [illegible] either [illegible] the shovel with a minimum swing [illegible] usually [illegible] The parallel approach permits [illegible] of the shovel [illegible] digging force [illegible] permits [illegible] to be [illegible] This approach is often used [illegible] where [illegible] space is limited.

Production Estimating

Production [illegible] can be estimated using Equation 3-1 [illegible] the shovel [illegible] shovel [illegible] can be prepared from manufacturer's data.

$$\text{Production (CY/hr)} = (CY) \times S \times F \times E \qquad (3\text{-}2)$$

where C = capacity (Table 3-6)
S = swing factor (Table 3-6)
F = bucket fill factor (Table 3-7) (LCY or LCM)
E = operator efficiency (Table 3-8)
S = job efficiency

Table 3–6 Standard cycles per hour for hydraulic shovels

	Machine Size					
	Small Under 5 yd³ (3.8 m³)		Medium 5–10 yd³ (3.8–7.6 m³)		Large Over 10 yd³ (7.6 m³)	
Material	Bottom Dump	Front Dump	Bottom Dump	Front Dump	Bottom Dump	Front Dump
Soil (sandy, gravel, clay)	130	170	180	[illegible]	[illegible]	[illegible]
Average (common earth, soft rock, well blasted rock)	70	130	160	[illegible]	[illegible]	[illegible]
Hard (hard rock, poorly blasted rock)	30	105	140	[illegible]	[illegible]	[illegible]

Adjustment for Swing Angle

	Angle of Swing (deg)					
	45	60	75	90	120	180
Adjustment factor	[illegible]	[illegible]	1.00	[illegible]	[illegible]	0.63

EXAMPLE 3–3

Find the expected production (bank m³/h) for a hydraulic shovel having a 3 yd³ (2.3 m³) hydraulic shovel equipped with a front swing bucket. The material is soft rock with a bucket fill factor of [illegible]. The average angle of swing is 75° and [illegible] (3.0)

SOLUTION

Standard cycles = [illegible] (Table 3–6)

Swing factor = [illegible] (Table 3–5)

Bucket volume = [illegible] m³

Bucket fill factor = [illegible]

Job efficiency = 0.[illegible]

Production = [illegible] × [illegible] × [illegible] × [illegible] = [illegible] (bank m³/h)

[illegible] × [illegible] × [illegible] × [illegible] = [illegible] (bank m³/h)

For [illegible] operated shovels, the BCSA Bureau of CIRCA has developed production tables that are widely used by the construction industry.

Job Management

The two major factors in hoeing shovel production are the swing angle and the same dig depth. [illegible] the angle of swing between digging and dumping [illegible] should be kept to a minimum. [illegible] the hoeing position. When no hoeing position is available, the shovel operator should [illegible] the dump point of the load [illegible] the next [illegible] the digging face and to smooth the excavation face. The face of the cut should be kept [illegible] to provide an even footing for the shovel and [illegible] movement in the cut face. The shovel should be moved up frequently to keep [illegible] from the working face. Using dipper teeth sharp will also increase production.

3–4 DRAGLINES

Operation and Employment

The dragline is a very versatile machine that [illegible] for digging and dumping [illegible] the [illegible] shovel. Ability to dig from above [illegible] dig depths in soft to medium-hard materials. The components of a dragline are shown in Figure 3–10.

[illegible] and weight position dipper [illegible] drag cable [illegible] the bucket [illegible] the ground surface. Digging is [illegible] by the position [illegible] hoist chain [illegible] the bucket [illegible] Figure 3–11). [illegible] the hoist chain attachment [illegible] the point [illegible] where the bucket [illegible] the soil. During hoisting and swinging, material is released

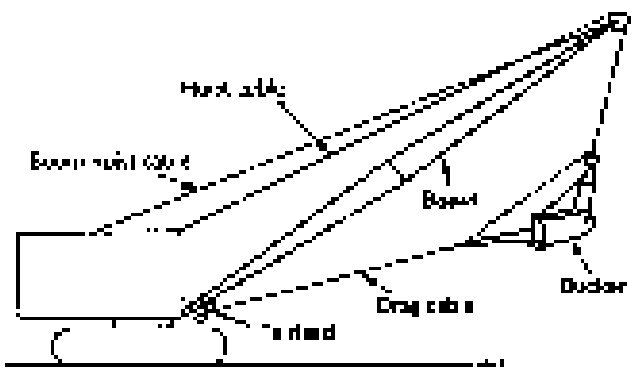

Figure 3–10 Components of a dragline

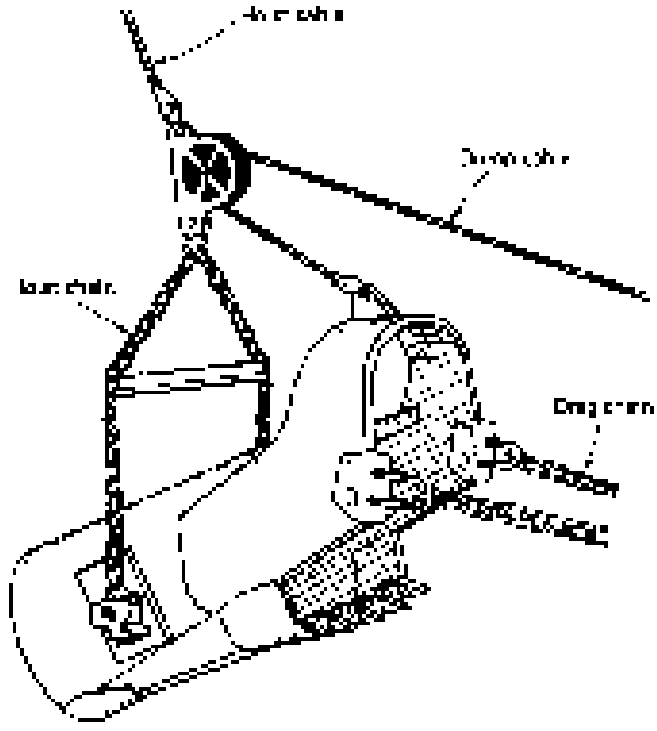

Figure 3-11 Dragline bucket

[illegible]

While the dragline is very versatile [illegible] have to perform digging [illegible] Hence the [illegible] bucket [illegible] during heavy digging [illegible] will prevent be exposed in digging operations that would [illegible] Which is called dragline [illegible] [illegible] used for dragline [illegible] should be [illegible] [illegible] machines [illegible] used as dragline [illegible] [illegible] power [illegible] weight [illegible] dragline [illegible] [illegible] provided by the manufacturer instead of the [illegible] [illegible] [illegible]

Production Estimating

The Association of [illegible] Manufacturers [illegible] commercial [illegible] Conveyor Manufacturers Association (CEMA) through its [illegible] [illegible] [illegible]

[illegible] overcome and the development [illegible] the [illegible] widely used by the [illegible] industry. [illegible] based on [illegible] Note, however, that [illegible] only [illegible] powered [illegible] and [illegible].

To evaluate design performance, [illegible] determine the [illegible] of the engine for the machine size and [illegible]. To [illegible] multiply [illegible] by [illegible] and [illegible] factor, [illegible] in equation [illegible] [illegible] in the table [illegible]

$$\text{Expected performance} = \text{Ideal output} \times \text{Scale capacity factor} \times \text{Efficiency} \qquad (3.2)$$

To [illegible] it is first necessary to determine [illegible] depth of [illegible] machine [illegible] from Table 3.6. Note [illegible] depth of cut by the [illegible] and [illegible] the [illegible]. The [illegible] is then [illegible] in the detailed [illegible] 3.6, [illegible] is necessary. The [illegible] calculation [illegible] in Example 3.4.

EXAMPLE 3.4

Determine the expected [illegible] production [illegible] per [illegible] based on the following information

[illegible]

SOLUTION

[illegible]

Table 3-7 Ideal crushing [illegible] (W/S/F) [illegible] data published in technical bulletin No. [illegible] Power Crushers and Stone Association, Bureau of CIMA, 1953.)

Type of Material	[illegible] (0.57)	[illegible] (0.75)	[illegible] (0.94)	Bucket Size [cu yd (m^3)] [illegible] (0.13)	[illegible] (0.38)	[illegible] (0.53)	[illegible] (0.77)	[illegible] (0.29)	[illegible] (2.62)	[illegible] (3.06)	[illegible] (3.82)
Limestone or chalk	[illegible]	[illegible]	[illegible]	[illegible]	[illegible]	[illegible]	[illegible]	[illegible]	[illegible]	[illegible]	[illegible]
Sandstone gravel	[illegible]	[illegible]	[illegible]	[illegible]	[illegible]	[illegible]	[illegible]	[illegible]	[illegible]	[illegible]	[illegible]
Common earth	[illegible]	[illegible]	[illegible]	[illegible]	[illegible]	[illegible]	[illegible]	[illegible]	[illegible]	[illegible]	[illegible]
Topsoil	[illegible]	[illegible]	[illegible]	[illegible]	[illegible]	[illegible]	[illegible]	[illegible]	[illegible]	[illegible]	[illegible]
Wet clay loam	[illegible]	[illegible]	[illegible]	[illegible]	[illegible]	[illegible]	[illegible]	[illegible]	[illegible]	[illegible]	[illegible]

[illegible]

Table 3–8 Optimum depth of cut for excavation. (This is a modified version of Construction Equipment Technical Bulletin No. 4, Power Transmission Shovel Association, Bureau of CMA, 1968.)

	Bucket Size [cu yd (m³)]										
Type of Material	¾ (0.07)	1 (0.75)	1¼ (0.94)	1½ (1.12)	1¾ (1.32)	2 (1.50)	2½ (1.87)	3 (2.29)	3½ (2.62)	4 (3.06)	5 (3.82)
Lightness of soil, loam, sand and gravel	6.0 (1.8)	6.6 (2.0)	7.0 (2.1)	7.4 (2.2)	7.7 (2.3)	8.0 (2.4)	8.5 (2.6)	9.0 (2.7)	9.5 (2.9)	10.0 (3.0)	11.0 (3.3)
Common earth	7.4 (2.2)	8.0 (2.4)	8.5 (2.6)	9.0 (2.7)	9.5 (2.9)	9.9 (3.0)	10.5 (3.2)	11.0 (3.4)	11.5 (3.5)	12.0 (3.7)	13.0 (4.0)
Wet or clay soil	8.7 (2.7)	9.3 (2.8)	9.8 (3.0)	10.2 (3.1)	10.6 (3.2)	11.0 (3.4)	11.6 (3.5)	12.2 (3.7)	12.8 (3.9)	13.2 (4.1)	14.0 (4.3)

Table 3-9 Swing-depth factor for dragline. (This is a modified set of data published in Technical Bulletin No. 4, Power Crane and Shovel Association, Bureau of Cit. 84, 1961.)

Depth of Cut (% of Optimum)	Angle of Swing (deg)							
	30	45	60	75	90	120	150	180
20	1.26	0.20	[illegible]	[illegible]	0.57	0.21	[illegible]	[illegible]
30	1.17	.08	1.02	[illegible]	[illegible]	0.05	0.78	[illegible]
50	1.05	.01	1.00	1.01	[illegible]	[illegible]	0.90	0.74
60	1.01	1.00	[illegible]	1.01	0.99	[illegible]	[illegible]	0.70
70	1.00	1.00	[illegible]	[illegible]	.00	0.91	[illegible]	[illegible]
80	1.00	.00	1.00	1.00	[illegible]	0.90	0.82	[illegible]
90	1.00	1.00	1.00	1.00	[illegible]	[illegible]	[illegible]	0.73
100	1.00	1.00	1.00	0.97	0.98	0.85	[illegible]	0.73
150	1.00	1.00	0.98	0.94	0.90	0.82	[illegible]	[illegible]
200	1.00	.00	0.94	0.91	[illegible]	0.79	0.78	0.69

Job Management

Bid quantities may be necessary to select the boom length, boom angle, bucket size and weight, and the maximum portion of the dragline that yields maximum production. As the shovel boom is lowered, maximum production is obtained at the minimum swing angle. In soft ground, the largest machine capable of stationary digging can be used, since this increases the allowable bucket size and consequently the production. Dragline digging time is based on the time for forward and back of the vertical line through the bucket point as illustrated in Figure 3-12. Spoil bucket hoists are used with the dragline to lift material necessary to obtain the bucket load. Dragline is used to excavate and to place material in the spoil mound which is as close as possible.

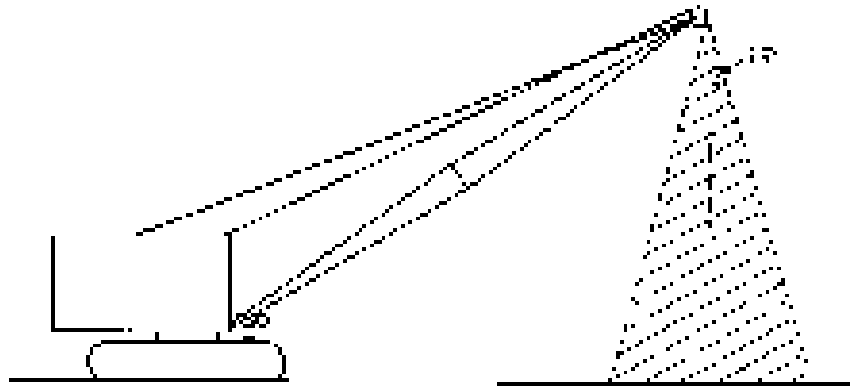

Figure 3-12 Minimum digging times for a dragline.

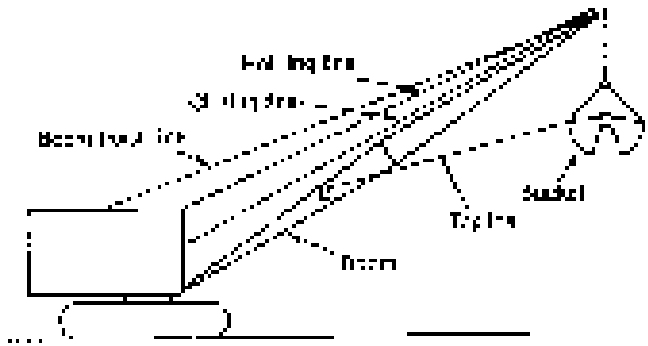

Figure 3-[illegible] Components of a clamshell.

3–5 CLAMSHELLS

When a crane-driven is equipped with a clamshell bucket it becomes an excavator. [illegible] The clamshell is capable of [illegible] by [illegible] the bucket [illegible] the [illegible] of the [illegible] and [illegible]. Clamshell [illegible] used in [illegible] [illegible] [illegible]

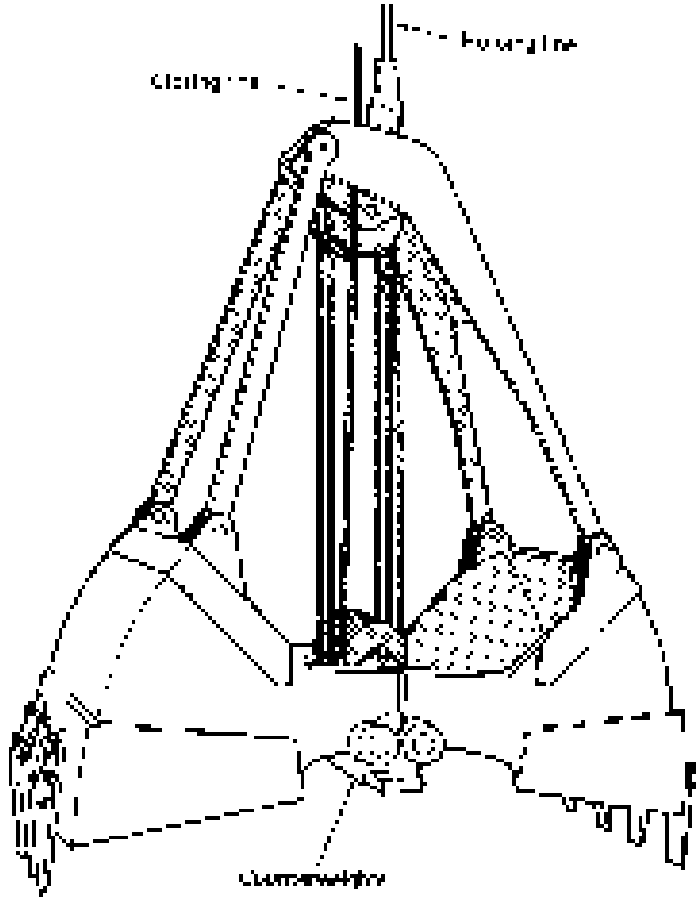

Figure 3-14 [illegible]

[illegible] fill factor of [illegible] efficiency [illegible] 50 min/h

SOLUTION

$$\text{Total cost} = \frac{[illegible]}{40} \times 0.05 \quad \frac{\$}{\text{yd}^3} = [illegible] \text{ LCY/h}$$

$$\text{Size} = \frac{[illegible]}{[illegible]} \times 0.75 \times 0.90 \quad \frac{\text{yd}^3}{\text{hr}} = [illegible] \text{ LCM/hr}$$

Figure 3-15 [illegible] bucket [illegible] of [illegible] [illegible]

Job Management

[illegible]

3-6 TRENCHING AND TRENCHLESS TECHNOLOGY

[illegible]

Figure 3-16 [illegible] (© [illegible] Company. All Rights Reserved)

Trenching Machines and Plows

[illegible]

Plows are [illegible] and simultaneously [illegible] cable or pipeline in [illegible] soils. Vibratory plows are [illegible] in Figure 3-17. Cable [illegible] pipe of [illegible] than static plows and can be used [illegible] hard or [illegible] soil.

Figure 3-17 Hydraulic slip story plow. (Courtesy of Vermeer Manufacturing Company. All Rights Reserved)

Trenchless Technology

While a number of different techniques are used in trenchless technology, the principal categories include pipe jacking, horizontal earth boring, and microtunneling.

The process of pipe jacking (Figure 3-18) involves pushing pipe horizontally through the soil. Working from a vertical shaft, a number of pipes in a manageable length are pushed by hydraulic jacks located against the shaft sides. As the pipe advances, soil is removed through the interior of the pipe. After the pipe section has advanced far enough, the hydraulic jacks are disassembled and another section of pipe is placed in position behind the first. The process continues until the entire pipe is within the pipe jacking operation.

In horizontal earth boring, a rotating bit is used to mechanically excavate the soil while the pipe is installed behind it. Depending on the nature of the soil, horizontal earth boring methods may include auger boring, mole plowing, flight boring, rotary compaction boring, impact ramming, horizontal directional drilling, and fluid boring. A brief description of the boring machine with permanent lubrication is shown in Figure 3-19. Many of these techniques utilize tools and equipment similar to those used in horizontal directional drilling. A number of types of devices are available to ensure that the drill head remains in the desired alignment as the pipe is installed. The use of a guidance system to monitor the drill head for proper alignment is illustrated in Figure 3-20. After the bore has been completed, several methods are available to place pipe into the borehole. In one method, pipe

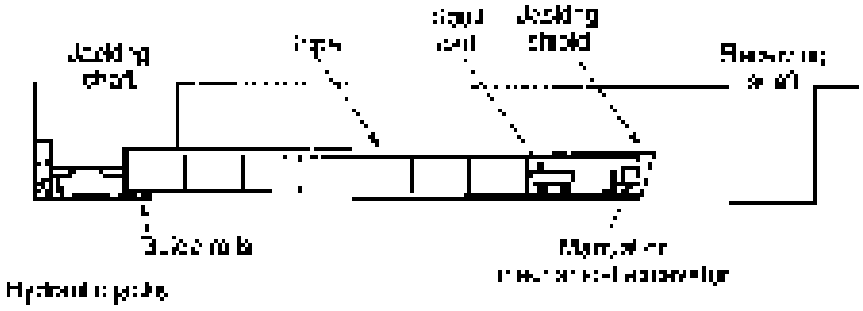

Figure 3-18 [illegible]

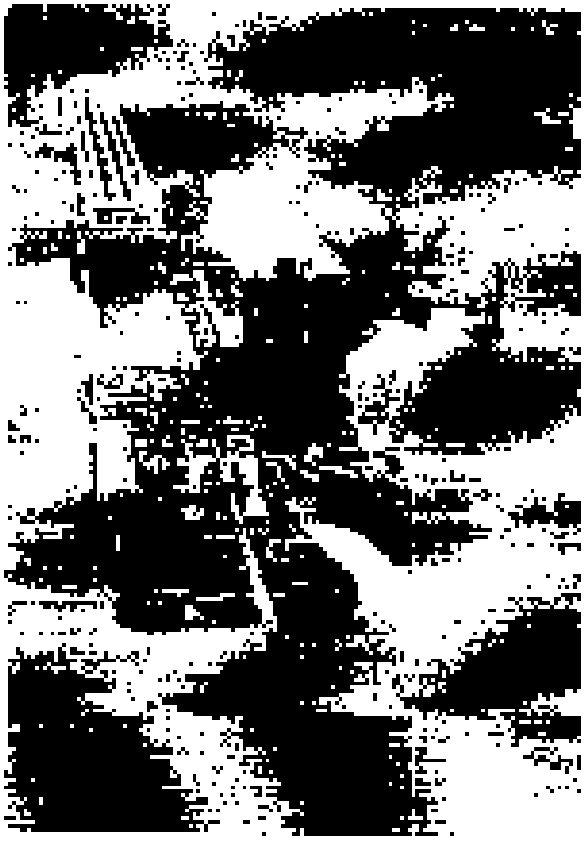

Figure 3-19 [illegible]

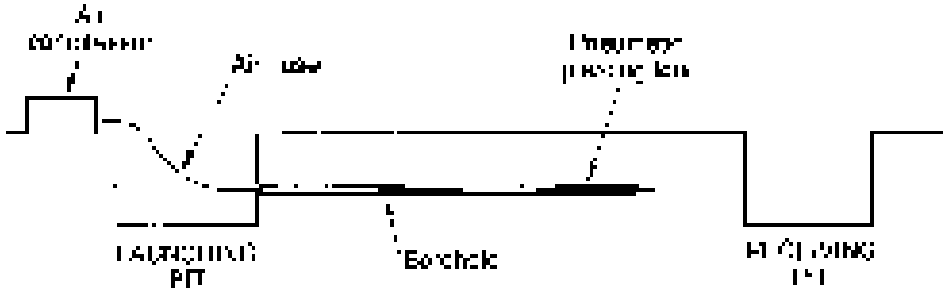

Figure 3-20 Installing a utility line by horizontal earth boring.

is pulled through the hole using the drill string. The drill head is fitted with a cone-shaped reamer. Uniform rotation of the reaming cone prevents the pipe from being damaged. In the case of a hard-packed rock, the pulling tube is replaced with a drill bit, and the drill string is used to advance the pipe through the rock. In soft or loose ground, the reaming cone is used.

Horizontal boring is a cost-effective method for the construction of utility lines, as described in Section 8. Except for the terminal excavations, it causes little disturbance to the surface. Because of the relatively small diameter of the boreholes, they are normally smaller than 1 m (3 ft) in diameter. They differ from other trenchless methods in that they use a commercial or custom-built mechanical drilling rig, rather than a tunnel boring machine. Steel casing pipe, Section 8-1, is frequently used in conjunction with boring.

Repair and Rehabilitation of Pipelines

The repair and rehabilitation of existing pipelines without excavation is another field of trenchless technology. While a number of methods exist, we limit ourselves to the sliding of the existing pipe and the lining of the existing pipe with a new pipe.

The sliding of a pipe is accomplished by pulling a new flexible pipe into the existing pipe or by inserting a line into the existing pipe. When a new pipe is used to replace the pipe, the resulting pipe must be slightly smaller than the original pipe. Another sliding technique involves pulling a flexible liner through a rigid pipe, expanding the liner, and forcing the liner against the rigid pipe in place.

Pipe bursting (Figure 3-21) uses a pneumatic, hydraulic, or pneumatic-piercing tool equipped with a special bursting head. The tool is inserted into the pipe and expands the pipe while it is being bursted. A new, slightly larger pipe is then pulled into the opening by the pulling tool.

3-7 CRANES

Cranes are primarily used for lifting, lowering, and transporting loads. They move from place to place horizontally by swinging on a vertical axis. Most mobile cranes consist of a carrier and superstructure equipped with a boom and hook as illustrated in Figure 3-22. The carrier has

Figure 3-21 Schematic of pneumatic pipe trenching machine. (Courtesy of Earth Tool Company.)

Figure 3-22 Components of a crane.

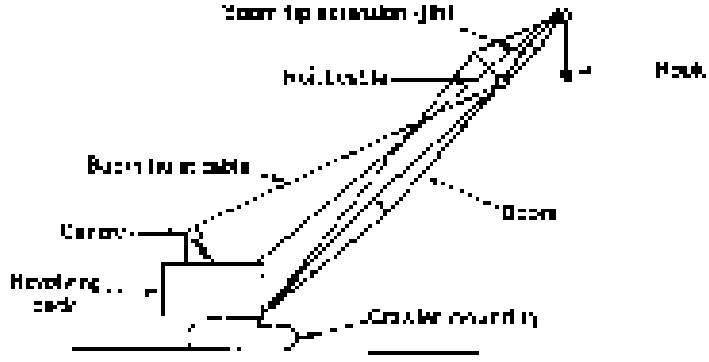

lines 3 is one of hydraulically operated equipment and is hydraulically powered telescoping boom mounted. The mobile crawling boom crane shown in Figure 3-23 is capable of lifting loads [illegible] of heavy buildings. Some specialized types of lifting equipment [illegible] are described in Chapter 14.

The major factor controlling [illegible] can be satisfied by [illegible] the operating radius [illegible] the horizontal distance [illegible] the hook. To determine the horizontal distance [illegible] is a function of the length and the angle [illegible]

Figure [illegible] Range [illegible] by [illegible] with telescoping boom. (Courtesy of Grove Worldwide)

[illegible] lifting capacity [illegible] the position of the boom [illegible] the [illegible] [illegible] [illegible] that [illegible] [illegible] [illegible]

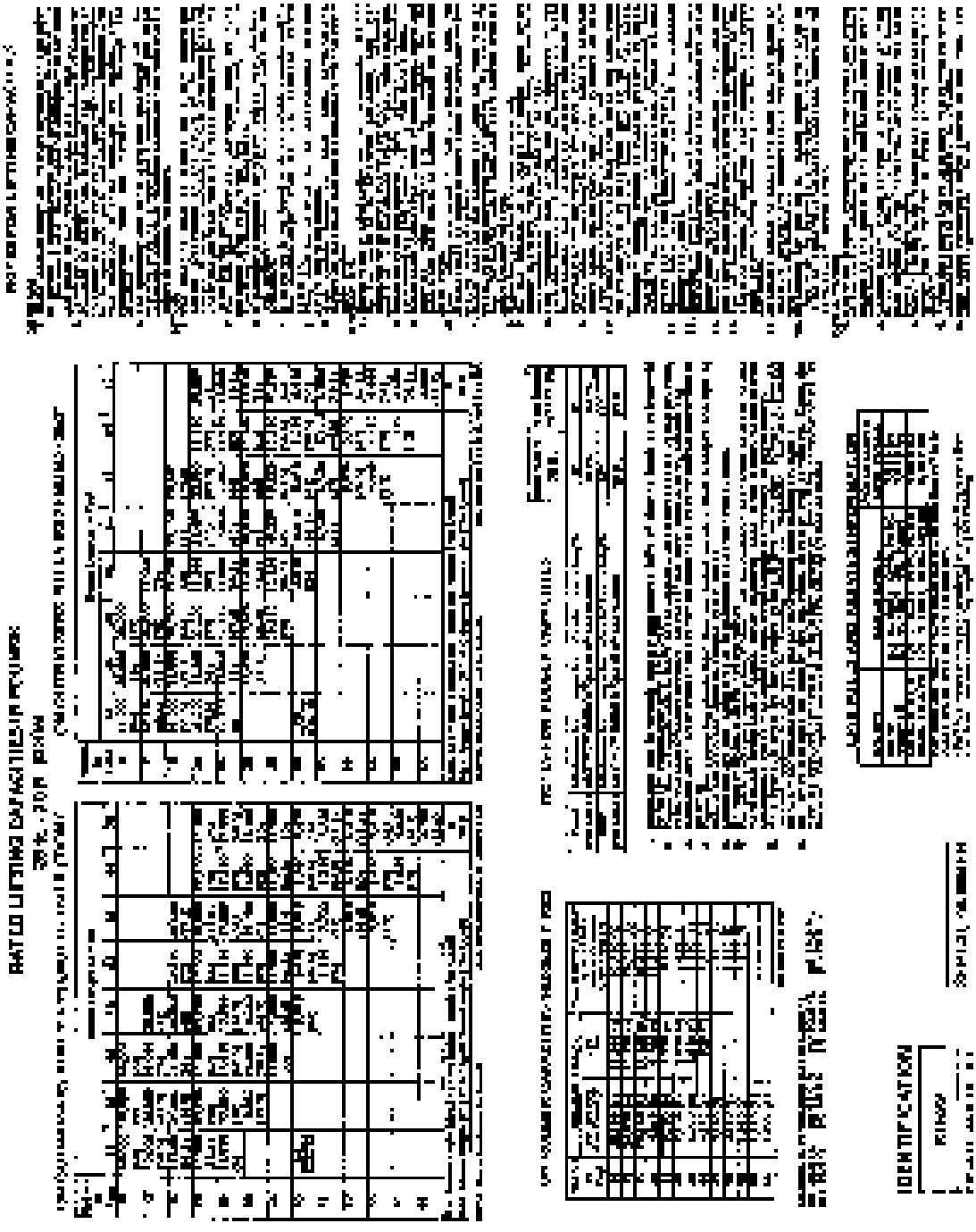

Figure 6-24. Grant-less capacity chart (plan-based) Cross Overlayed.

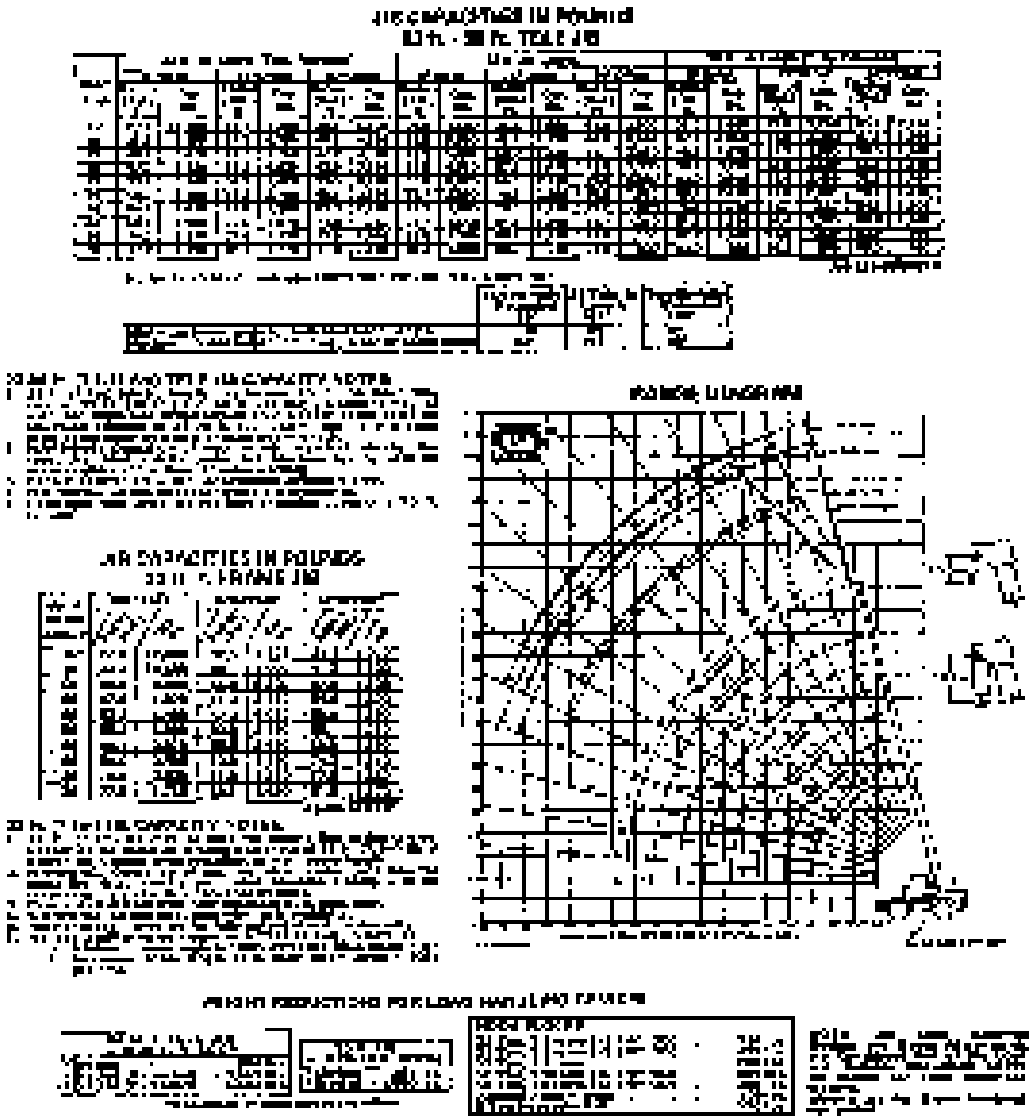

Figure 3–24 (continued)

Data Construction Industry Manufacturers Association (CIMA)]. Lade, the system's manufacturer, operating is assigned when [illegible] with [illegible] specified operating [illegible] [illegible] [illegible]

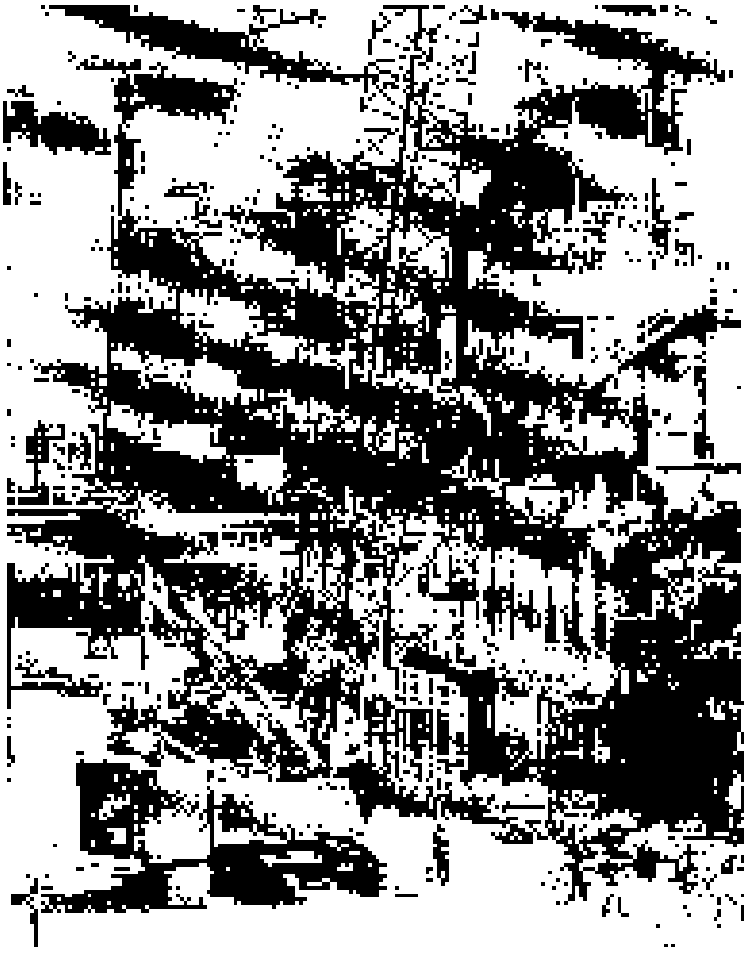

Figure 3-25 Large crawler-mounted all-terrain mobile crane (courtesy of Manitowoc Cranes, Inc.)

has a nominal capacity of 22 tons (19.9 [illegible]) [illegible] operating [illegible]. The crane [illegible] can easily lift a load of 20 tons (18.1 [illegible]) [illegible] (6 m) and a [illegible] 1000 to 1062 kg, [illegible] 40 ft (12.2 m) [illegible] 50 ft (15.2 m) [illegible] Table B. [illegible]

Heavy Lift Cranes

[illegible] mounted on [illegible] very heavy loads [illegible] mobile crane [illegible] shown in Figure 3-26. The [illegible] 1250 [illegible]

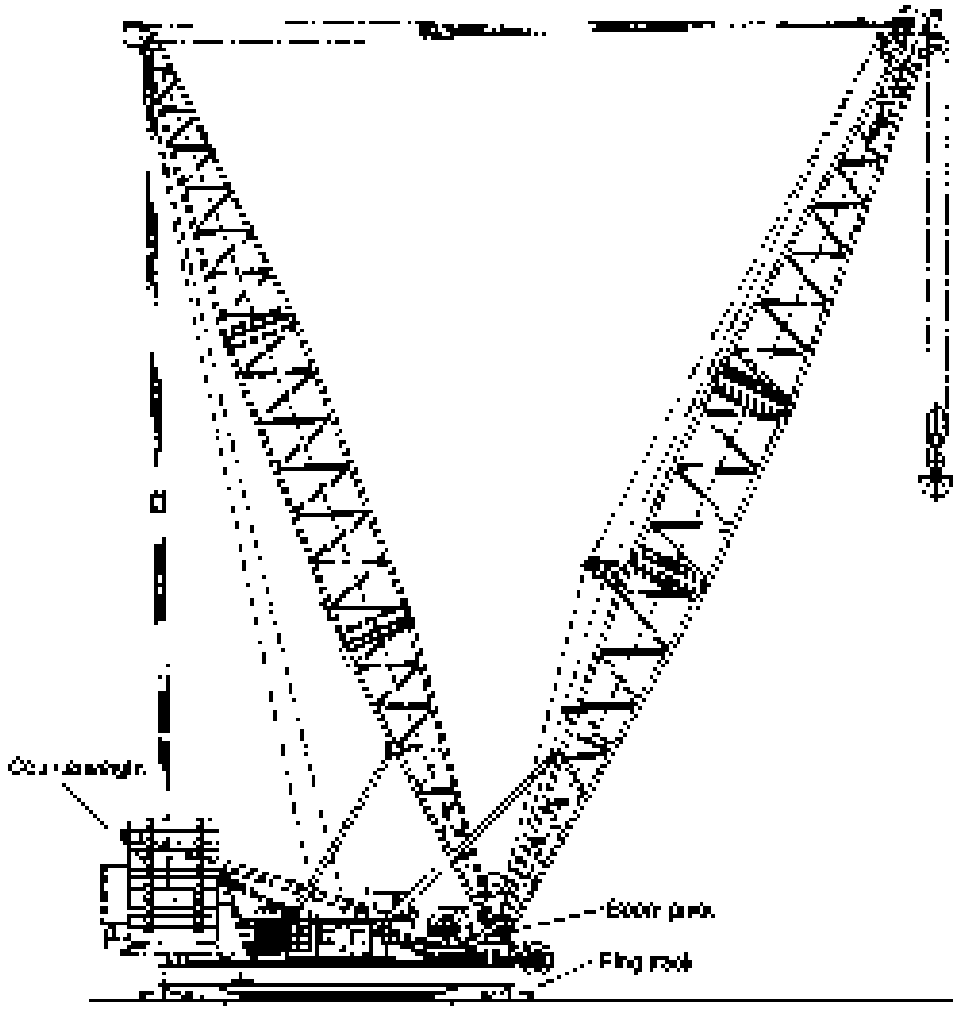

Figure 3-26 Crane whipping concrete. (Courtesy of Manitowoc Cranes Concept)

To lift very heavy loads, several cranes can be used together. In the case [illegible] some [illegible] must be provided to support the crane weight when the crane is [illegible] back. Crane [illegible] assembly machine [illegible] to support [illegible] and support [illegible] and [illegible] called a [illegible]. Such an [illegible] is shown in Figure [illegible]. Some [illegible] are shown in Figure [illegible] which [illegible] (Sitty).

Figure 3-27 [illegible] tower crane on a building site. Courtesy of Potain Tower Cranes Inc.

Tower Cranes

Another special type of crane is the [illegible] (Figure 3-27). The tower crane [illegible] which [illegible] building [illegible] height capability. Modern [illegible] tower cranes [illegible] Figure 3-28.

The [illegible] of tower cranes [illegible] the horizontal jib [illegible] shown in Figure 3-27. The [illegible] of this type of crane is illustrated in Figure 3-29. However, [illegible] jib [illegible] Figure 3-30 [illegible] of [illegible] horizontal jib [illegible] with [illegible] jib [illegible] Advantages: [illegible] [illegible] Disadvantages: [illegible] [illegible] [illegible]

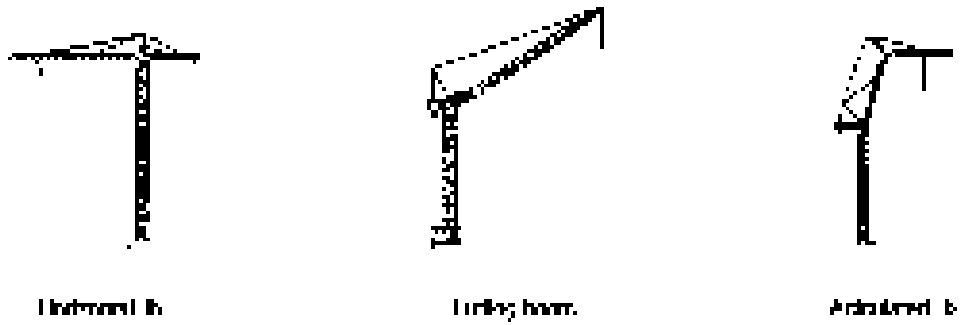

Figure 3-28 Various types of tower cranes

Types of tower cranes by mast: [illegible] mast, [illegible] mast, [illegible] mast,

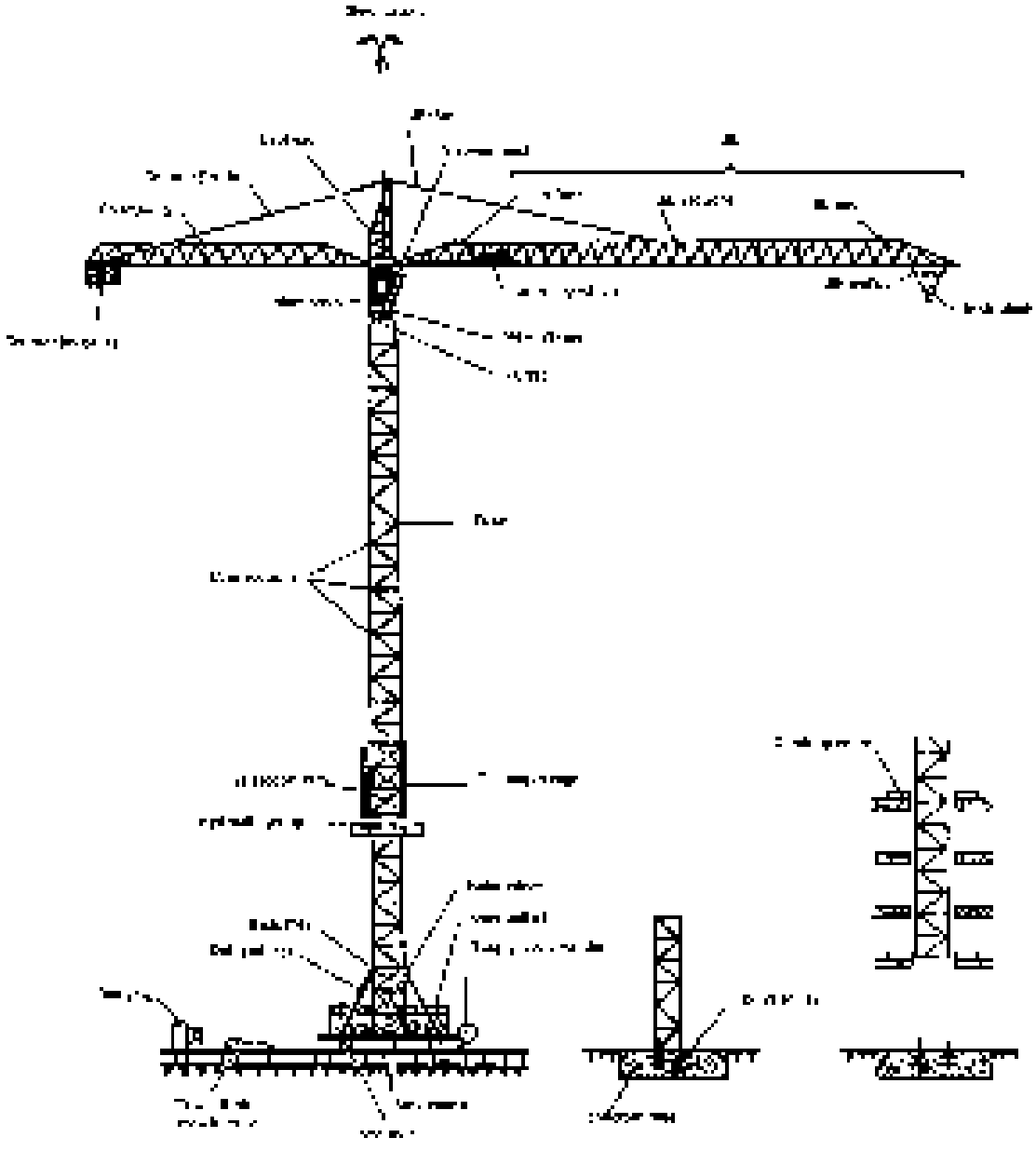

Figure 3-29 Terminology for a horizontal jib tower crane. (Courtesy of Tower Crane, Inc.)

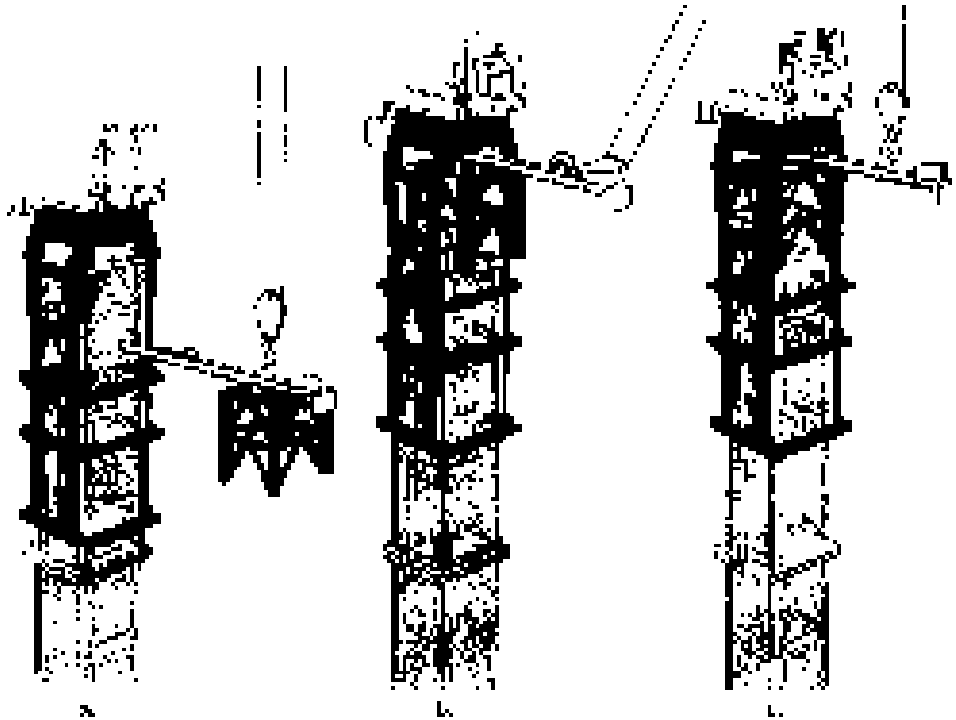

Figure 2-30 [illegible] Courtesy of PNC Construction Equipment Group

[illegible]

Crane accidents continue to be frequent in construction work, particularly when lifting heavy loads near other workers. [illegible] U.S. [illegible] by existing [illegible] Occupational Safety and Health Administration (OSHA) Crane Operators have been focused. The [illegible] of crane accidents. So to suggest [illegible] the following:

- [illegible] navigation on [illegible] supports.
- The [illegible] can be [illegible] by only [illegible] operators with [illegible] minimum [illegible].
- Use [illegible] hand signals [illegible] at all times. Make sure that all workers are [illegible] the crane [illegible].

Table 3-10 Maximum capacity vs. lift radius for a tower crane (pounds [kilograms])

Lift Radius ft (m)	Boom Length (maximum hook radius)—ft (m)					
	250 (76.2)	230 (70.1)	200 (61.0)	170 (51.8)	140 (42.7)	110 (33.5)
110 (33.5)	21554 [illegible]	23607 [illegible]	22455 [illegible]	24357 [illegible]	26531 [illegible]	[illegible] [illegible]
120 (36.6)	965 [illegible]	21166 [illegible]	20385 [illegible]	21242 [illegible]	23037 [illegible]	
130 (39.6)	[illegible] [illegible]	18[illegible] [illegible]	17[illegible] [illegible]	19[illegible] [illegible]	9[illegible] [illegible]	
140 (42.7)	[illegible] [illegible]	[illegible] [illegible]	[illegible] [illegible]	[illegible]		
150 (45.7)	[illegible] [illegible]	[illegible] [illegible]	[illegible] [illegible]	[illegible] [illegible]		
160 (48.8)	[illegible] [illegible]	[illegible] [illegible]	[illegible] [illegible]	[illegible] [illegible]		
170 (51.8)	[illegible] [illegible]	[illegible] [illegible]	[illegible] [illegible]	[illegible] [illegible]		
180 (54.9)	[illegible] [illegible]	[illegible] [illegible]	[illegible] [illegible]			
190 (57.9)	[illegible] [illegible]	[illegible] [illegible]	[illegible] [illegible]			
200 (61.0)	[illegible] [illegible]	[illegible] [illegible]	[illegible] [illegible]			
210 (64.0)	[illegible] [illegible]	[illegible] [illegible]				
220 (67.1)	[illegible] [illegible]	[illegible] [illegible]				
230 (70.1)	[illegible] [illegible]					

Maximum [illegible] = 20[illegible] [illegible]

- Provide [illegible] when the [illegible] [illegible] [illegible].
- [illegible] [illegible] [illegible] [illegible] [illegible] [illegible] [illegible].
- Check [illegible] [illegible] [illegible] [illegible] [illegible] [illegible]

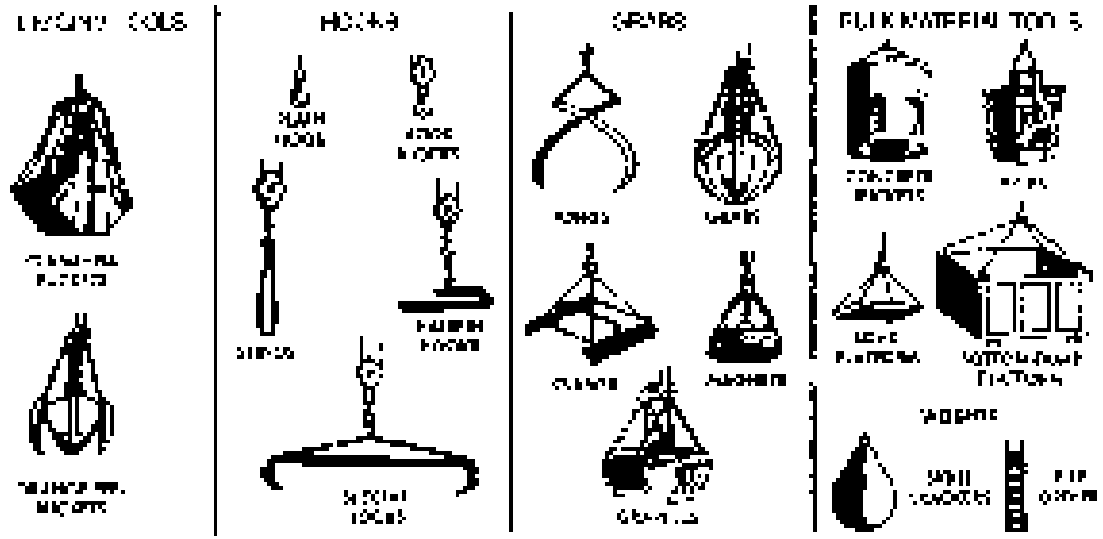

Figure 4-11 Crane hook and other tools. (Permission to reproduce this material has been granted by the Crane & Shovel Assn. (CSA), a bureau of the Construction Industry Manufacturers Assn. (CIMA). Neither CSA nor CIMA can assume responsibility for the accuracy of the reproduction.)

PROBLEMS

1. A 2-cubic-yard (1.53 m³) dragline is being used to excavate a new foundation. The average swing angle is 90°, the average depth of cut is 8.0 ± 2.7 ft, and, on average, it takes 30 min. Estimate the daytime hourly production in bank measure.
2. A 3-cubic-yard (2.29 m³) hydraulic shovel with a 30-cm tooth tip is excavating scoria. The swing angle is 180°, and job efficiency is 75%. Estimate the shovel's hourly production in bank measure.
3. How can a crane be safely used for a vertical lift in a tight space without violating the rated capacity?
4. Determine the crane capacity which will lift 400 cubic yards (306 m³) of gravel and place it into a dump truck. Assume the bucket capacity of the gravel is 0.75 cubic yd (0.57 m³). Estimated cycle time is 2.5 min. Swing efficiency is assumed to be 80%.
5. What is the minimum time that a crane can safely produce a 500-ft swing by the arm of a jib with 24 under-slung following conditions? The arm is supported at the 25- to 34-ft sheave, the jib overall is 115 ft, the sheave has a height of 11.5 ft, and the maximum radius is 125 ft. The load weighs 1,000 lb, and the maximum radius is 25 ft. Other conditions must be considered in order to safely lift this load.
6. Use the power and sheave capacity charts in Table 4-3. The crane is equipped with a 1/2-in (12.7-mm) rope. The crane is performing a lift of 10,000 lb (4535 kg)

The weight of shipment the grapple can be used in [illegible] kg. What is the maximum [illegible]?

7. A [illegible] will be used to dig a hole [illegible] = [illegible]. The minimum [illegible] deep. The [illegible] capacity [illegible] kg. [illegible] the maximum digging depth [illegible] mm. [illegible] angle [illegible] 85°. [illegible] the [illegible] mm. [illegible] is 70%.

8. A hydraulic excavator [illegible] the [illegible] for a building. Bucket [illegible] capacity is [illegible] m³. The material's [illegible] bucket fill factor of [illegible]. Its efficiency [illegible] is [illegible]. The machine's maximum digging [illegible] m and the average digging depth is [illegible] m. Average swing angle is 90°. [illegible] hourly production [illegible]?

9. [illegible] equipment [illegible] for a [illegible] excavation [illegible] the [illegible] swing [illegible]?

10. [illegible] program [illegible] the production of a bucket wheel [illegible] Figure [illegible] 6. [illegible] capacity [illegible] kg/m³. [illegible] bucket fill factor [illegible] and joint [illegible]. [illegible] back [illegible] bucket fill factor is [illegible] otherwise, it would be [illegible].

REFERENCES

1. [illegible] Handbook [illegible]
2. [illegible] Rating [illegible]
3. [illegible] Research [illegible] Midland, TX.
4. [illegible] Excavators and [illegible] Bureau of Construction [illegible] Washington [illegible] Midland [illegible]
5. [illegible] Edward [illegible] Mining Equipment [illegible] Midland [illegible] Washington [illegible]
6. [illegible] W. Western Construction Equipment [illegible] Upper Saddle River, NJ [illegible] 2000.
7. [illegible] Construction [illegible] Equipment [illegible] Publications [illegible] Bridgeport, BY.
8. [illegible] Company [illegible] Equipment [illegible] Chicago, IL.
9. [illegible] Equipment [illegible] Wiley & Sons [illegible] New York [illegible] 1991.

4 Loading and Hauling

4–1 ESTIMATING EQUIPMENT TRAVEL TIME

In estimating the time required for a piece of equipment to complete a cycle, it is necessary to break the cycle down into its component parts.

$$\text{Cycle time} = \text{Fixed time} + \text{Variable time} \tag{4–1}$$

Fixed time represents the time required for a piece of equipment to perform the operations that do not change with the distance moved. It includes such time as the time required to load, unload, maneuver, and dump. Fixed time can usually be determined with reasonable accuracy by stopwatch observations.

Variable time represents the time required for a piece of equipment to travel from the loading site to the unloading site and return. As you would expect, travel time will depend on the vehicle's weight and speed, the condition of the haul road, the grades encountered, and the distance involved. This section presents methods for estimating vehicle speeds and travel times. Methods for estimating fixed times are given in Sections 4–2 to 4–5, which deal with specific types of hauling equipment.

Rolling Resistance

To determine the maximum speed of a vehicle at a specific location, it is necessary to determine the total resistance to movement of the vehicle. The major sources of resistance in traveling over a road are the two components, rolling resistance and grade resistance.

$$\text{Total resistance} = \text{Grade resistance} + \text{Rolling resistance} \tag{4–2}$$

Resistance may be expressed in terms of pounds per ton of vehicle weight, or pounds per unit of vehicle weight, or pounds per pound of vehicle. The last method is the most convenient. The rolling resistance of a vehicle is primarily due to the flexing of the road surface and the vehicle tires. The rolling resistance can be substantially reduced by equipping the vehicle with pneumatic tires, reducing the tire pressure, and improving the road surface. It has been found to be about 40 lb/ton of vehicle weight (20 kg/t). For a dump truck equipped with pneumatic tires, the rolling resistance factor is about 30 lb/ton (15 kg/t). It has been common practice

Table 4–1 Typical values of rolling resistance factor

Type of Surface	Rolling Resistance Factor	
	Metric	kgf
Concrete or asphalt	[illegible]	[illegible]
Firm, smooth, level soil (dirt road, lawn)	[illegible]	[illegible]
Rutted dirt road (soil 2–4 in. penetration)	100	50
Soft rutted dirt (3–6 in. penetration)	150	75
Loose sand or gravel	[illegible]	[illegible]
Soft or muddy, deeply rutted	400–[illegible]	[illegible]

[illegible] in pounds per one-tenth of a mile drive

the rolling resistance factor is increased 20 lb/ton (0.15 kN/t) for each 12.5 cm of the penetration. The basic equation for determining rolling resistance factor is

$$\text{Rolling resistance factor (lb/ton)} = 40 + 1.0 \times \text{cm penetration} \qquad (4\text{–}3b)$$

$$\text{Rolling resistance factor (kgf/t)} = 20 + 0.8 \times \text{cm penetration} \qquad (4\text{–}3a)$$

The rolling resistance in pounds (kilograms) may be found by multiplying the rolling resistance factor by the vehicle's weight in tons (metric tons). Table 4–1 provides typical values for the rolling resistance factor in various situations.

Grades may also be caused by rutting and caused by soil conditions. Actually, grades are usually considered to have no rolling resistance when rolling vehicles are on a grade. Actually, the rolling resistance of a vehicle does vary somewhat between different surfaces. However, the standard method for rolling resistance based on grade conveniently assumes the power actually expended on the grade when measuring rolling resistance. Thus the rolling resistance of the tractor over the standard surface has already been subtracted from the tractor's performance. Although a vehicle's rolling resistance is usually considered to be a constant value, it does change when a vehicle's weight is increased. Thus the rolling resistance of the trailer should be considered in calculating the total resistance of the combination.

Grade Resistance

Grade resistance is the force required to move a vehicle's weight uphill on a grade. It is a function of the vehicle's weight and the grade. Grade resistance is positive when uphill, zero when on a level grade, and negative when downhill. The sign of grade resistance may be found by multiplying the vehicle's weight by the sine of the angle that the road surface makes with the horizontal. However, for the grades usually encountered on roads, it is sufficiently accurate to use the grade instead of the sine. Thus, a 1% grade represents a rise of 1 meter in 100 meters, or a vertical distance of 1 meter per 100 meters. Grade resistance equals 1% of the vehicle's weight. For example, the grade resistance factor is 10 lb/ton (5 kgf/t) for each 1% of grade.

$$\text{Grade resistance factor (decimal)} = \text{[illegible]} \times \text{grade (\%)} \quad (4\text{–}41)$$

$$\text{Grade resistance force (lb)} = \text{[illegible]} \times \text{grade (\%)} \quad (4\text{–}42)$$

Grade resistance may be calculated using Equations 4–5 or 4–6.

$$\text{Grade resistance (lb)} = \text{Vehicle weight (lb)} \times \text{Grade resistance factor (decimal)} \quad (4\text{–}54)$$

$$\text{Grade resistance (kg)} = \text{Vehicle weight (kg)} \times \text{Grade resistance factor (decimal)} \quad (4\text{–}55)$$

$$\text{Grade resistance (lb)} = \text{Vehicle weight (lb)} \times \text{Grade} \quad (4\text{–}56)$$

$$\text{Grade resistance (kg)} = \text{Vehicle weight (kg)} \times \text{Grade} \quad (4\text{–}57)$$

Effective Grade

The total resistance to movement of a vehicle is the sum of its rolling resistance and grade resistance. It may be expressed in pounds or kilograms. However, it is convenient to express the total resistance as a percentage, which would have the same grade resistance equivalent of the total resistance actually encountered. This percentage is called the effective grade. The total resistance is defined in an effective grade expressed in percent, so percent total resistance and percent effective grade are numerically equal. Effective grade may be easily calculated by use of Equations 4–7.

$$\text{Effective grade (\%)} = \text{Grade (\%)} + \frac{\text{Rolling resistance factor (lb/ton)}}{20} \quad (4\text{–}58)$$

$$\text{Effective grade (\%)} = \text{Grade (\%)} + \frac{\text{Rolling resistance factor (kg/t)}}{10} \quad (4\text{–}59)$$

EXAMPLE 4-1

A wheel loader weighing 100 tons (91 t) is hauling material on a road with a rolling resistance of 40 lb/ton (20 kg/t). What is the total resistance force (kg) and effective grade when (a) the loader is ascending a 5% grade, (b) the scraper is descending a 5% grade?

SOLUTION

$$\text{Rolling resistance force} = 40\ \text{lb/ton} \times 2\ \text{ton} = 80\ \text{lb} = 36\ \text{kg} \quad (\text{Eq. 4–52})$$

$$\text{[illegible]} = 20\ \text{kg/t} \times 2\ \text{t} = 40\ \text{kg} \quad (\text{Eq. 4–53})$$

$$\text{Rolling resistance} = 100\ \text{(lb/ton)} \times 40\ \text{lb/ton} = 4000\ \text{lb}$$

$$\text{[illegible]} = 90\ \text{(kg/t)} \times 40\ \text{kg/t} = 4500\ \text{kg}$$

$$\text{(a) Grade resistance} = 100\ \text{(tons)} \times 2000\ \text{(lb/ton)} \times 0.05 = 10{,}000\ \text{lb} \quad (\text{Eq. 4–54})$$

$$= 10{,}000\ \text{lb}$$

$$\text{[illegible]} = 91\ \text{t} \times 1000\ \text{(kg/t)} \times 0.05 = 4550\ \text{kg} \quad (\text{Eq. 4–55})$$

$$\text{Total resistance} = 10{,}000\ \text{lb} + 4000\ \text{lb} = 14{,}000\ \text{lb} \quad (\text{Eq. 4–2})$$

$$\text{[illegible]} = 4550\ \text{kg} + 4500\ \text{kg} = 9050\ \text{kg}$$

$$\text{Effective grade} = S = \frac{L/W}{\cos\theta} \pm \sin\theta \qquad \text{(Eq. 4-26)}$$

$$\text{Grade resistance} = W(\sin\theta) \approx W(\tan\theta) \approx W(S) \qquad \text{(Eq. 4-27)}$$

$$= [illegible]\ \text{lb}$$

$$= W\ [illegible] \approx [illegible] \approx [illegible]\ \text{lb}_f \qquad \text{(Eq. 4-28)}$$

$$\text{Total resistance} = [illegible]\ \text{lb} = [illegible]\ \text{lb} + [illegible]\ \text{lb}$$

$$[= [illegible]\ \text{kg}_f + [illegible]\ \text{kg}_f = [illegible]\ \text{kg}_f \qquad (F_g = 2)$$

$$\text{Percentage grade} = S = \frac{[illegible]}{[illegible]} = [illegible]\% \qquad \text{(Eq. 4-29)}$$

$$[= S = \frac{[illegible]}{[illegible]} = [illegible] \qquad \text{(Eq. 4-30)}$$

EXAMPLE 4-2

A [illegible] weighing [illegible] lb (75 kg) is moving on a [illegible] grade of 4%. What is the total resistance (lb and kg) of the train, [illegible] resistance factor is [illegible] lb (50 kg)?

SOLUTION

$$\text{Rolling resistance (aerodynamic)} = \frac{[illegible]\ \text{lb}}{[illegible]\ \text{lb/cm}^2} \times [illegible]\ \text{lb/cm}^2 = [illegible]\ \text{lb}$$

$$= [illegible] \times [illegible]\ \text{kg}_f = [illegible]\ \text{cm}^2$$

$$\text{Grade resistance} = [illegible]\ \text{lb} \times [illegible] = [illegible]\ \text{lb} \qquad (F_g = 2)$$

$$= [illegible] \times [illegible]\ \text{kg}_f \times [illegible] = [illegible]\ \text{kg}^2 \qquad (F_g = 2)$$

$$\text{Total resistance} = [illegible] + [illegible] = [illegible]\ \text{lb} \qquad (F_g = 2)$$

$$= [illegible] + [illegible] = [illegible]\ \text{kg}_f$$

Effect of Altitude

At [illegible] altitudes, engine power and thrust decrease because the air density is less. The [illegible] of the [illegible] and the [illegible] cycle [illegible] the [illegible] and increase [illegible] fuel [illegible]. However, [illegible] decreased [illegible] by [illegible] for each 1000 ft (300 m) increase in altitude. [illegible] of [illegible] which [illegible] fuel [illegible]. Unpressurized [illegible] are [illegible] at higher altitudes [illegible] by [illegible] and [illegible] Cruise altitude [illegible] of 30000 ft (9150 m) or more.

Multiplying [illegible] percentage of [illegible] in [illegible] power [illegible]. When [illegible] is [illegible] the [illegible] [illegible] However, when [illegible] is available, the

drawing bar or tractive force, the use of Equation 4-[illegible] is very helpful for comparing the performance of various alternative equipments.

$$\text{Drawing value (\%)} = [illegible] \qquad (4\text{-}8a)$$

$$\text{Drawing force (\%)} = [illegible] \qquad (4\text{-}8b)$$

The percentage of total power available for drawing [illegible] is the drawing force. The use of drawing force indicators may be [illegible] equipment is illustrated in Example 4-[illegible].

Effect of Traction

The power available for motive vehicles and is heavily dependent on overall traction between vehicle and drawbar pull for motor vehicles. Rimpull is the pull available at the drive wheels of the motive vehicle. Slippage of the drive wheels under rated conditions. Slippage is a result of the slippage of the [illegible] wheels, this is due to power [illegible] the surface [illegible] power available at the rim of the drive wheels under rated conditions. Consequently, [illegible] maximum pull [illegible] equipment, [illegible] graph. In the figure, moving the [illegible] shows the maximum traction that can be developed between the driving wheels and the road surface. Traction depends on the coefficient of [illegible] and the weight on the drive wheels expressed by Equation 4-[illegible]. This represents the maximum [illegible] a vehicle can develop [illegible] of the equipment.

$$\text{Maximum drawbar pull} = \text{Coefficient of traction} \times \text{Weight on drive wheels} \qquad (4\text{-}9)$$

For [illegible] and all-wheel [illegible] equipment, the weight on the drive wheels is the total [illegible] equipment. For other types of vehicles, consult the manufacturer's [illegible] to determine the weight on the drive. Typical values of coefficient of traction for some surfaces are [illegible] in Table 4-[illegible].

Table 4-2 Typical values of coefficient of traction

Type of Surface	Rubber Tires	Tracks
Concrete, dry	[illegible]	[illegible]
Concrete, wet	0.60	[illegible]
Earth roads, dry	0.60	[illegible]
Earth roads, wet	[illegible]	[illegible]
Gravel roads	0.65	[illegible]
Clay, dry	0.60	[illegible]
Sandy loam	[illegible]	[illegible]
Sand, wet	0.40	[illegible]
Snow packed	[illegible]	[illegible]
Ice	[illegible]	[illegible]

[illegible]

EXAMPLE 4.3

A six-wheel rear-drive truck weighs 44,000 lb (20,000 kg) and produces a maximum torque of 40,000 lb·ft (55,000 N·m) at full load. The truck is being considered for a 40,000-lb (18,000-kg) payload. A pulling 20,000 lb (9,000 kg) is required to move the truck on its own. Can the truck pull the trailer? Use Equation 4.2 to calculate the tractive effort.

SOLUTION

$$\text{Reduction factor} = 5 \times \left[\frac{20{,}000 - 3000}{10{,}000}\right] = 21.5 \quad \text{(Eq. 4.8)}$$

$$= \frac{[illegible]}{[illegible]} = [illegible] \quad \text{(Eq. 4.8)}$$

$$\text{Percentage of total vehicle weight} = 10.0 \times [illegible] = 7.5\%$$

$$\text{Maximum available power} = 40{,}000 \times 0.20 \times 21{,}000 \text{ lb}$$

$$= 18{,}150 \times 0.22 = 14{,}946 \text{ kg}$$

$$\text{Coefficient of traction} = 0.45 \quad \text{(Table 4.2)}$$

$$\text{Maximum tractive effort} = [illegible] \times [illegible] = 19{,}200 \text{ lb} \quad \text{(Eq. 4.9)}$$

$$= 0.45 \times 20{,}000 = 9000 \text{ kg}$$

Because the maximum torque is limited by traction, it is not possible to pull the trailer. The tractive effort provided is not sufficient. For the truck to succeed, it would be necessary to reduce the gross vehicle weight, increase the coefficient of traction, or increase the vehicle's weight on the drives.

Use of Performance and Retarder Curves

Coaster machines may be equipped with dynamic retarders and parking brakes. The elevator pull and speed of the type of installation are determined by the gross vehicle weight. For other types of transportation, manufacturers usually present the speed versus pull characteristics for their equipment in the form of performance curves. Figure 4.6 is a performance chart indicating the maximum speed that a vehicle can maintain under a specified load and rolling resistance. A retarder chart indicates the maximum speed at which a vehicle can travel downhill at a specified load and rolling resistance without using brakes. Retarder charts derive their name from the vehicle's maximum speed, which is typically the speed limit for a rolling vehicle specified and designated.

Figure 4.7 is a chart of relatively simple performance curves of the type often used for smaller trucks. Rankine & Hybrid pulls shown on the vertical scale and maximum speed. The vertical scale shows the vehicle speed. The procedure for using the chart is to find the gross pull and rolling resistance of the vehicle and to find the speed. The chart

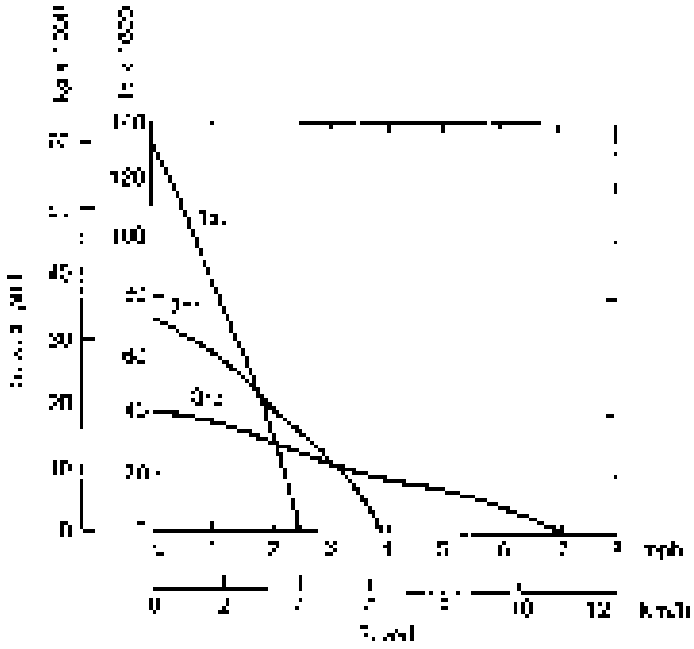

Figure 4–1 Typical vehicle drawbar performance curves.

[illegible] the vertical axis with the vertical pull and move horizontally to the curve [illegible] the horizontal axis. Drop vertically from the point of intersection to the horizontal axis. The other curve represents the maximum speed that the vehicle can attain while overcoming the specified pull. When the horizontal line of maximum pull intersects the curve for the first gear, the point of intersection falls to the right. Beyond this point the vehicle can gear up to the vehicle and the power curves.

EXAMPLE 4–4

For the performance curves in Figure 4–1, calculate the maximum speed of the vehicle when the maximum pull (tractive effort) is 60 kN (27,240 lb).

SOLUTION

Enter Figure 4–1 on the vertical axis at 60 kN (27,240 lb) and move horizontally until you intersect the curves for first and second gear. Read the corresponding speeds of 1.6 mph (2.6 km/h) in second gear and 2.5 mph (4.0 km/h) in first gear. The maximum possible speed is therefore 2.5 mph (4.0 km/h) in first gear.

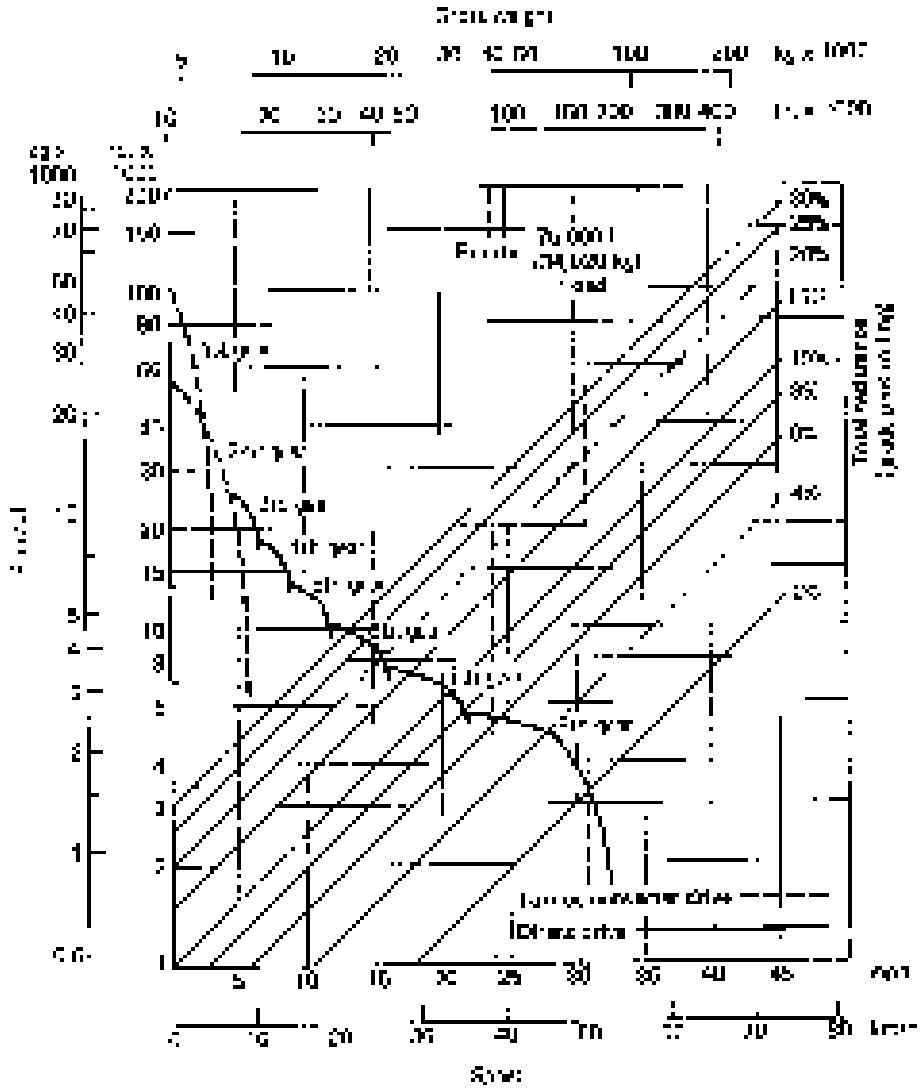

Figure 4-2 Wheel torque/power curves. (Courtesy of Caterpillar Inc.)

Figure 4-2 represents two examples of performance curves for the type of typically used by construction equipment, trucks and wagons. In addition to curves of equal tractive pull, this type of chart provides a graphical method for calculating pull-limited resistance. In order to do so, it is necessary to know the total weight of the vehicle (empty or loaded as applicable). Proceed vertically until you intersect the original tractive curve, according to the percent total resistance or tractive pull, interpolating as necessary. Then, the point move horizontally until you intersect the maximum vehicle speed curve. From the point of intersection, drop vertically to find the maximum vehicle speed

When all the adjustments are made, the procedure is used to find the intersection with the gross weight on the top scale and then vertically until you intersect the total resistance curve. Now, horizontally to the vertical left scale, read the required pull corresponding to vehicle velocity and effective grade. Next, divide the required pull by the quantity (1 − driveline factor expressed as a decimal) to obtain the adjusted required pull. Now, from the adjusted value of required pull on the left scale, move horizontally to intersect one of the tractor curves and then vertically to find the maximum vehicle speed. This procedure is repeated for varying loads when a vehicle performance chart is used. The total power due to cargo is the total required pull minus the total power due to vehicle resistance. The procedure is illustrated in Example 4-5.

EXAMPLE 4-5

Using the performance chart of Figure 4-2, determine the maximum speed for a vehicle with a gross weight 150,000 lb (68,000 kg), that is at a grade of 10%, and the vehicle drag factor is 20%.

SOLUTION

Start on the top scale with a gross weight of 150,000 lb (68,000 kg), move vertically to intersect the 10% total grade line, and then move horizontally to read a total resistance of 15,000 lb (6800 kg). Now, multiply by the drag factor to obtain an adjusted required pull of 18,000 lb (8160 kg). Now, move to the left scale at 18,000 lb (8160 kg) and move horizontally to intersect the first, second, and third gear curves. Drop vertically from the point of intersection with the third gear curve to find a maximum speed of 6 mph (9.6 km/h).

Figure 4-3 illustrates a typical rectangular chart. In this case, it is a vehicle operating in a tractor-trailer mode performance chart. Unlike Figure 4-2, this chart uses a logarithmic scale and is not as similar to a performance curve. Reading the chart is the reverse of the vehicle weight, vehicle effective grade, and horizontally until you intersect the curve. Drop vertically from the curve to find the maximum speed at which the vehicle should be operated.

Estimating Travel Time

The maximum vehicle speed is not always realized because of traffic conditions and other factors. To estimate travel time, one can use the average speed. This does not include vehicle acceleration and deceleration. Of course, not for emergencies, for vehicle time and consumption is to find the maximum vehicle speed by an average speed found from the chart. Now, divide the average vehicle speed by the total time to the vehicle. In this formula, by dividing the vehicle length by the average vehicle speed. When a vehicle at the end

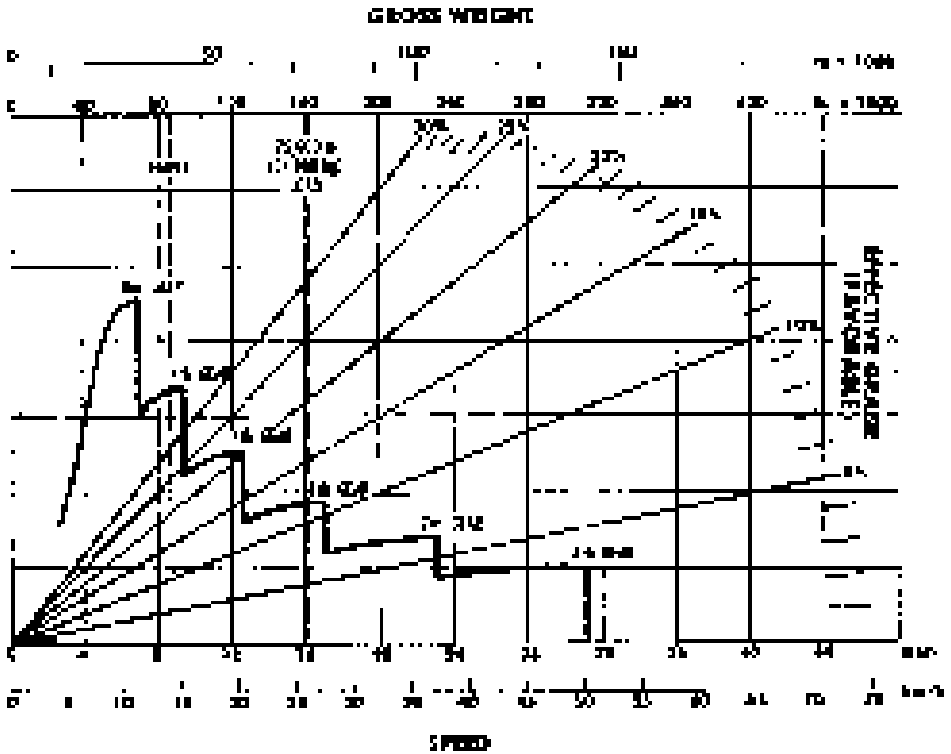

Figure 4–8 Wheel scraper recorder curve. (Courtesy of Caterpillar Inc.)

Table 4–6 Average Speed Factors

Length of Haul Section		Starting from 0 or Coming to a Stop	Increasing Maximum Speed from Previous Section	Decreasing Maximum Speed from Previous Section
ft	m			
100	30	0.42	0.72	1.30
200	61	0.51	0.76	1.31
300	92	0.57	0.80	1.38
400	122	0.63	0.82	1.21
500	152	0.65	0.84	1.20
700	214	0.70	0.86	1.24
1000	305	0.74	0.88	1.19
2000	610	0.83	0.91	1.10
3000	914	0.90	0.94	1.08
4000	1220	0.93	0.96	1.06
5000	1525	0.95	0.97	1.04

[illegible]

A [illegible] method for estimating cycle time [illegible] is to use the model time curves provided in [illegible] Figure [illegible] and [illegible]. As you can [illegible] from the graph, [illegible] effective grade. [illegible] effective grade is negative. In this case, the average speed [illegible] the vehicle resistance curve. [illegible] the time obtained from the curve by the quantity [illegible] to obtain the required time.

The use of both the average speed and the model time curve method is [illegible] in the computer [illegible] of this chapter.

4-2 DOZERS

Tractors and Dozers

A tractor equipped with a blade mounted on the mounting frame is known as a dozer or bulldozer. A dozer moves earth by lowering the blade and dragging it full. Blade [illegible] material is [illegible] and pushes the material ahead of the blade or piles it up behind the blade. The material is unloaded by pushing it over a dump or lifting the blade to dump or spill it.

Rubber-tired [illegible] dozers are [illegible] of their [illegible] traction and low ground pressure. Typically [illegible] dozers are [illegible] (Figure [illegible]) are well suited for [illegible] because of their [illegible] mobility. Low ground pressure [illegible] with wide tracks are well suited for [illegible] ground pressure [illegible]. Track [illegible] speed [illegible] wheel [illegible] of the blade [illegible] higher speed [illegible] dozers. Wheel dozers are also capable of operating on paved roads without damaging the surface. With [illegible] tractor's dozing ability is limited and [illegible] by its power. [illegible] high power pressure [illegible] its high ground pressure makes it ineffective in [illegible].

Blade. Blade-tipped [illegible] may be equipped with [illegible] other [illegible] blade. The [illegible] blade makes it [illegible] perform [illegible] such as [illegible] plows, ripers, and scarifiers, which are used to break up hard surfaces. The [illegible] used to move more [illegible] equipment, such as [illegible] scrapers, [illegible]. Dozing operations are discussed [illegible] in more.

Dozers may be equipped with [illegible] transmissions. Mechanical [illegible] transmission [illegible] the blade [illegible]. The [illegible] is possible to [illegible] forward [illegible] it is possible to a dozer equipped with a hydrostatic drive to turn in [illegible] while the other moves forward.

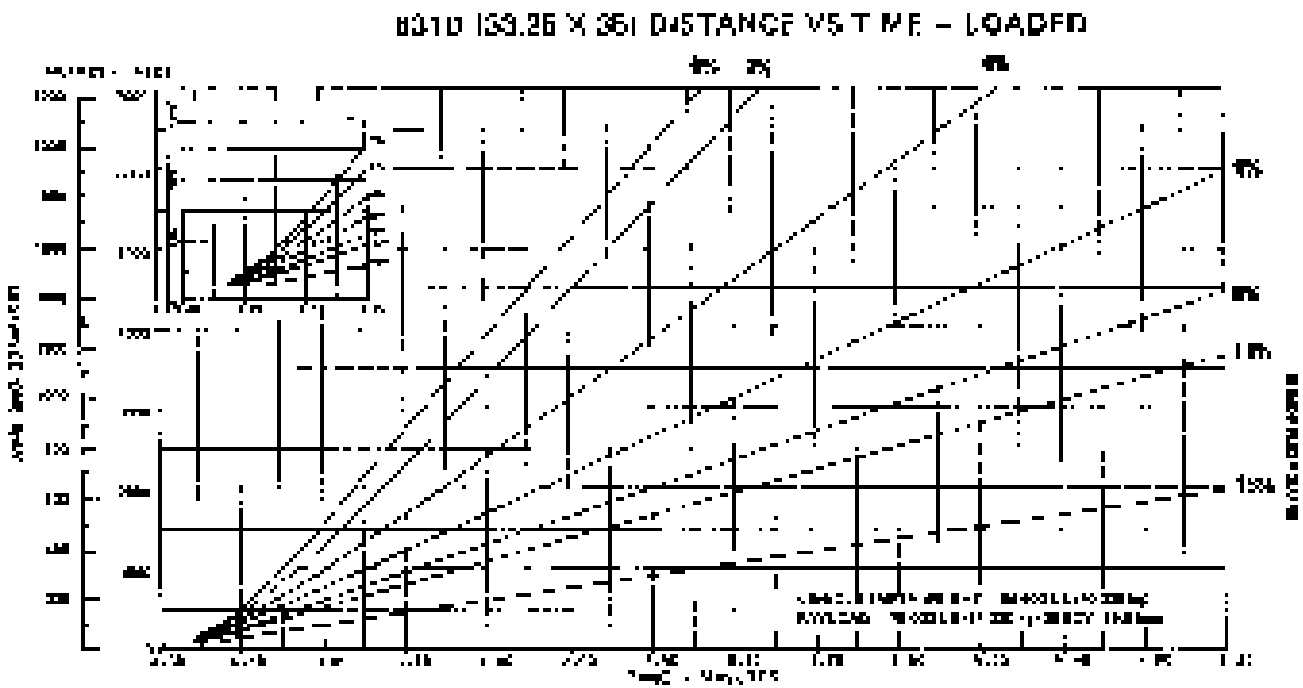

Figure 4-4 Scraper move time (loaded. Courtesy of Caterpillar Inc.)

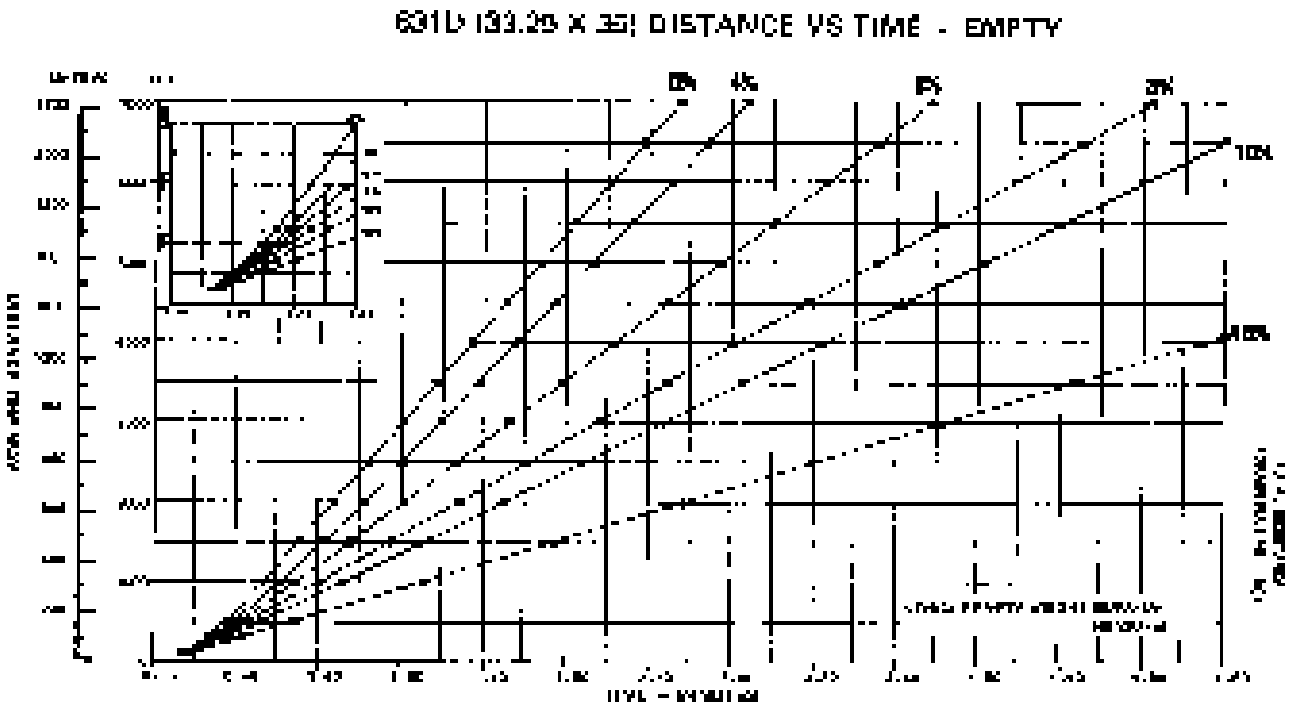

Figure 4–5. Scraper travel time—empty (Courtesy of Caterpillar Inc.)

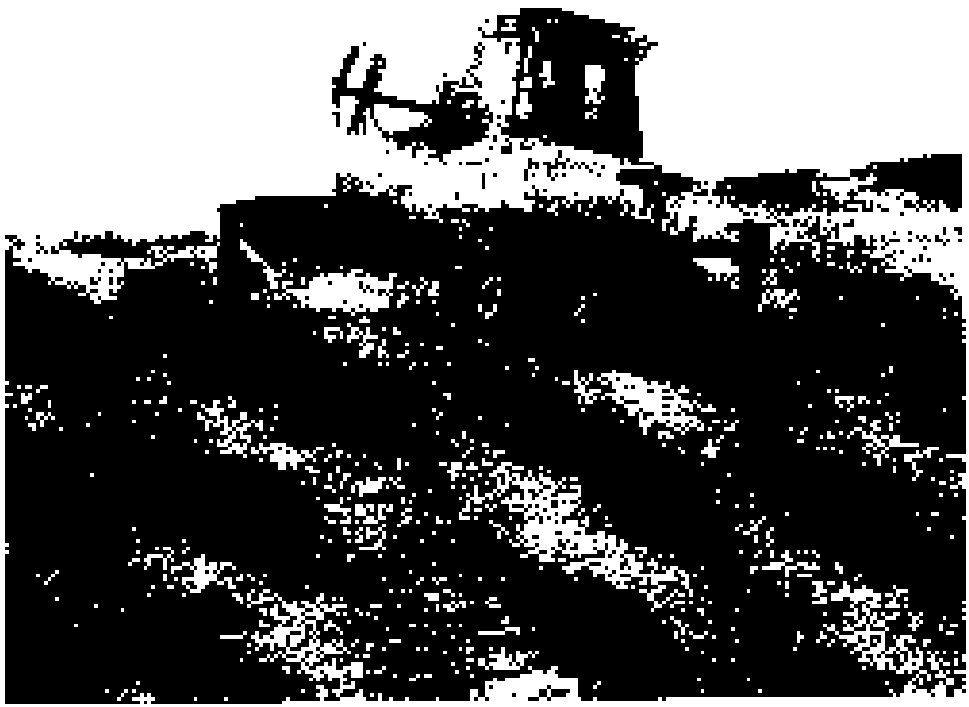

Figure 4–6 Crawler tractor dozer. (Courtesy of Sure Bullard Construction)

Dozer Blades

A wide variety of dozer blades are available, and the four most common are shown in Figure 4–7. Each of these types of blades has many variations that may be made to blades. Blades are illustrated in Figure 4–8. Thus, the blade is used for digging and backfilling from a nearby pile, pushing the scraper for load, reduces load penetration, and causes the soil material to roll to front of the blade, without pushing the blade into the soil penetration. A "U" by the blade is helpful when cutting, digging and moving material. At the blade shown in Figure 4–9 has been installed on the dozer blade. However, only the right side can be raised.

The top pressures of potential dozer attachments are based on the ratio of 1.7 HP power to blade size. These values are based on potential damage to equipment and the operator

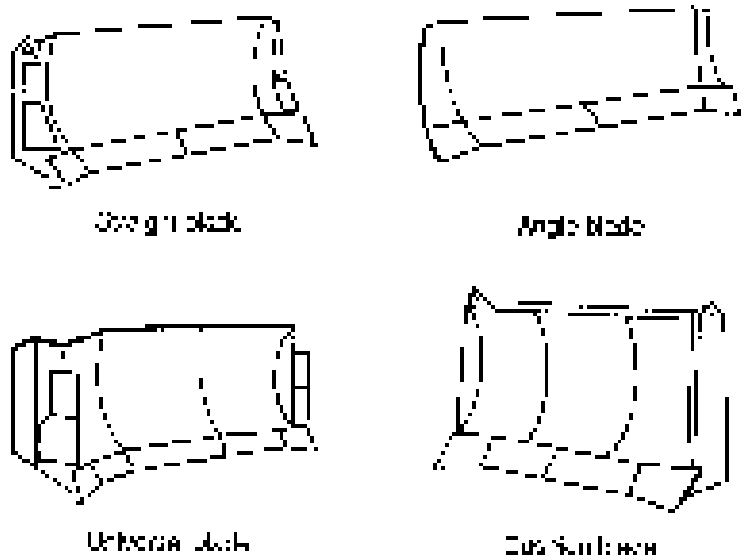

Figure 4-7 Common types of dozer blades.

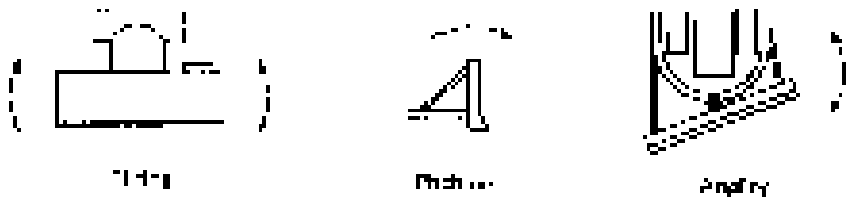

Figure 4-8 Dozer blade adjustments.

[illegible]

The [illegible] loader [illegible] [illegible] [illegible]

Estimating Dozer Production

The basic earthmoving production equation (Equation 2-1) may be applied in estimating dozer production. This method requires an estimate of the average blade load and average cycle time. There are several methods available for estimating average blade load, including the blade manufacturer's capacity rating, previous work under similar conditions, and computer models of several typical loads. A general method for calculating loads of machine-moving blade loads is as follows:

- Determine the stockpile dimensions (W, L, H) and the angle of repose (θ).
- Measure the volume of the pile (W) perpendicular to the blade and in line with the direction of motion, using the average of two measurements.
- Measure the height (H) of the pile in the direction of motion.
- Measure the length of the pile parallel to the blade.
- Calculate blade volume using Equation 4-10.

$$\text{Stockpile load (LCY)} = \text{Coefficient} \times (\text{Height}) \times (\text{Width}) \times (\text{Length}) \qquad (4\text{-}144)$$

$$\text{Blade capacity (LCY)} = 0.833 \times (\text{Width}) \times (\text{Height}) \times (\text{Length}) \qquad (4\text{-}188)$$

Total dozer cycle time is the sum of fixed and variable cycle times. Variable cycle time depends on the time required for the dozer to move, change gears, and turning and dump. Table 4-4 may be used to estimate dozer cycle times. Variable cycle time is the time.

Table 4-4 Typical dozer fixed cycle times

Operating Conditions	Time (min)
Forward shift transmission	0.30
Direct drive transmission	0.10
Electric drive	0.15

Table 4-5 Typical dozer operating speeds

Operating Conditions	Speeds
Dozing	
[illegible]	1.5 mph (2.4 km/h)
[illegible]	2.0 mph (3.2 km/h)
[illegible]	2.0 mph (3.2 km/h)
[illegible]	2.5 mph (4.0 km/h)
Ripping	
100 ft (30 m) or less	Maximum forward speed in second or higher gear; use first gear for backing (short runs)
Over 100 ft (30 m)	Maximum forward speed in third or higher gear; use second gear for backing (short runs)

[illegible] equipment [illegible] Since the total [illegible] is [illegible] [illegible] Table 4-3 provides typical operating speeds for [illegible] and [illegible] & [illegible] manufacturers provide more precise [illegible] for their equipment.

EXAMPLE 4-6

A [illegible]-drill [illegible] has an [illegible] cycle capacity of 15 LCY (17.65 LC/h). [illegible] [illegible] [illegible]

[illegible] operator and their blades [illegible] cutting. This technique results in a [illegible] capacity and quality [illegible] two single blades. However, the technique is not [illegible] [illegible] distances [illegible] [illegible] [illegible]

Figure 4-9 [illegible] Construction Equipment North America, [illegible]

[illegible] machines available include backhoe loaders, front loaders, material handling arms, [illegible] hammers, asphalt cutters, trenchers, augers, and hydraulic attachments.

Skid-Steer Loaders

[illegible] skid-steer loaders [illegible] vertical lift arms [illegible] wheels or tracks on [illegible] side of the machine, which appears [illegible] in the [illegible] skid. A cutaway [illegible] machine is shown in Figure 4-10. These machines usually weigh less than [illegible] lb [illegible] kg), have [illegible] to [illegible] hp [illegible] kW), and have lift capacities of [illegible] lb [illegible] kg). While [illegible] machines [illegible], [illegible] machines are [illegible] available for operating in [illegible] spaces. In recent years, skid-steer loaders have become [illegible] popular because of their [illegible] size, high [illegible] ability, and [illegible]. Like the [illegible] they are [illegible] a number of [illegible] attachments [illegible] loaders. Some of the many available attachments include:

- augers
- brooms
- buckets (general-purpose)
- buckets (grapple)
- buckets (utility)
- buckets (lightweight)

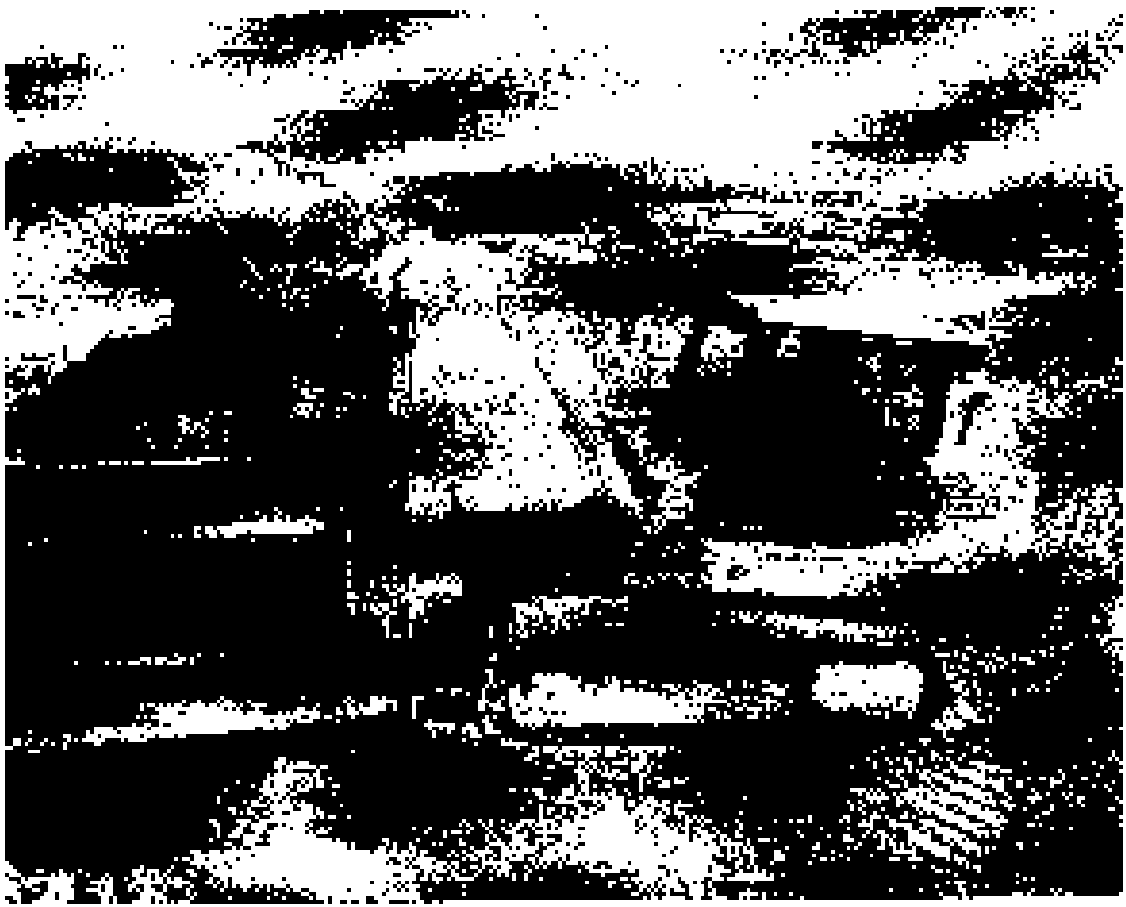

Figure 4–40 Truck loader. (Courtesy of John Deere Construction & Forestry Company.)

Trucks, all-purpose	skids
Cold mixers	sump grinders
Jacks	[illegible]
Dumpers	[illegible]
Indicators	vibrating compactors

Material Handlers

[illegible] Figure 4–14 has a maximum capacity of 5,000 lb [illegible] Operating [illegible] weight [illegible] lb.

Figure 4-11 Backhoe loader (Courtesy of [illegible])

Figure 4-12 Skid steer loader with [illegible] (Courtesy of the [illegible] Company)

Figure 4–13 Compact track loader. (Courtesy of the Bobcat Company)

Estimating Loader Production

Loader production may be estimated as the product of average scoop load multiplied by cycles per hour (equation 2–1). Basic cycle time for a loader includes the movement of loading, dumping, spotting, and movement of the loaded and empty machine. Distance is 50 ft or less in each direction. Table 4–9 presents typical values of basic cycle time for wheel and track loaders. While manufacturers' performance charts should be used wherever possible, typical cycle times for wheel loaders are shown in Figure 4–15.

Federal Highway Administration (FHWA) studies have shown that variation in loader cycle time has been attributed to distance (50 ft (25 m) between loading and dumping points). Therefore, need to consider local conditions and choose appropriate models.

Loader average capacity is stated in rated heaped bucket volume, as shown in Table 3–1. Bucket capacity should be adjusted by bucket fill factor (Table 3–2) and material density to determine actual bucket weight.

Figure 4-14 Material handling machinery of [illegible] Industries, Inc.

Table 4-6 Basic loader cycle time

Loading Conditions	Basic Cycle Time (min)	
	Articulated Wheel Loader	Track Loader
[illegible] material	[illegible]	[illegible]
Loose material	0.30	[illegible]
[illegible]	0.50	0.45

EXAMPLE 4-7

[illegible] wheel loader [illegible] material [illegible] material [illegible] rock [illegible] fill [illegible] 50 min/h

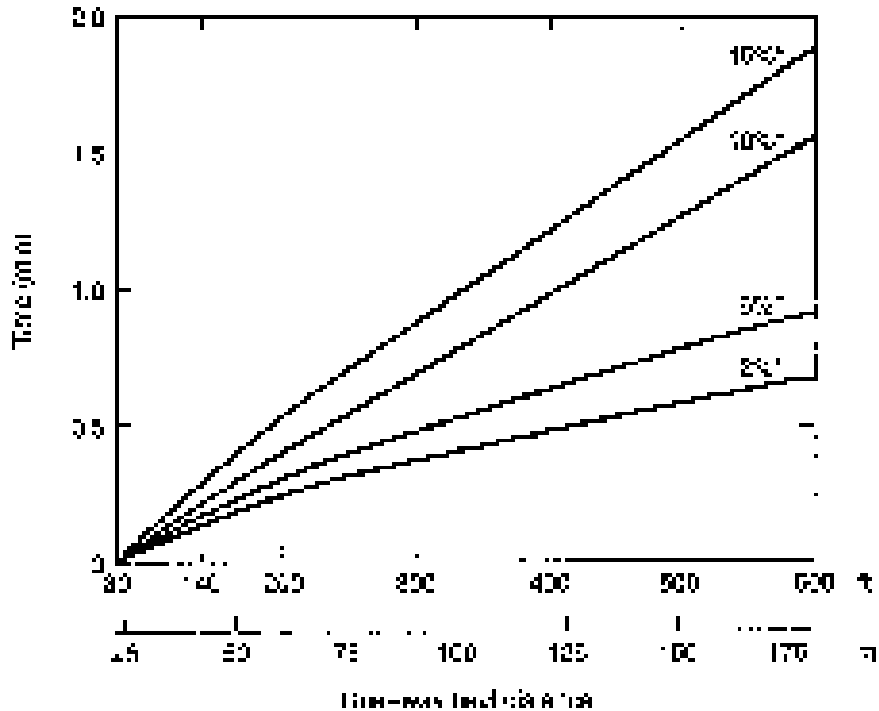

*Effective grade

Figure 4-15 Travel time versus haulage flow [illegible].

SOLUTION

Bucket volume [illegible] = [illegible] LCY [illegible] CM

Cycle time = [illegible] min [illegible] Table [illegible]

Travel time [illegible] (Figure [illegible])

Cycle time = [illegible] + [illegible] = [illegible] min

Production [illegible] $\frac{[illegible]}{[illegible]}$ = [illegible] LCY/h

[illegible] $\times \frac{50}{[illegible]}$ [illegible] LCY/h

Job Management

Some considerations involved in managing a mining project have already been presented. Continued [illegible] problems [illegible] [illegible] Time [illegible] [illegible] [illegible]

Figure 4-16 Multipurpose loader bucket.

pit mine to haul out the ore. Because water acts as a lubricant, it reduces the cutting resistance of rock or clay. Gies.

Because of spring-loaded cutting edges, the weight of the material cutting the bucket edge and the ground surface, the bucket can be used on a slope. In addition, the bucket can also be used in the dump position for loading and unloading. Hydraulically operated positioning of the bucket and boom will maximize digging, dumping, and dump power. Multipurpose buckets, also called 4-in-1 buckets and multipurpose buckets (Figure 4-16), are capable of performing as a bucket, a scraper, a clamshell, a dozer blade, and a backhoe. Such buckets are advantageous when it is necessary to handle a variety of materials. Hydraulically operated multiple-function buckets can be used with front-mounted loaders, backhoes, etc.

Figure 4–17 Four-engine all-wheel-drive scraper. (Courtesy of Caterpillar Inc.)

4–4 SCRAPERS

Operation and Employment

Scrapers are capable of excavating, hauling, and dumping material over a wide range of distances. However, only the short-haul scraper and the self-loading scraper are capable of achieving high accuracy in forming within the excavation. Compaction is an important aspect. Loading procedures are discussed later in this section. The cutting edge is equipped with replaceable cutting blades, which may be reversible or reversible on the cutting edge and perimeter. But the slipper arrangement and curved blades provide better maneuverability than does a straight blade. However, a straight blade is preferred for finish work.

A typical scraper is a wheeled earth-moving machine. The principal type is a self-propelled single-engine vehicle with two axles. There is a scraper bowl with a front gate, a rear gate, and a cutting edge. The scraper bowl is equipped with a hydraulic system, which is used to raise the gate, lower the cutting edge, and operate the ejector. Such a scraper has a low rolling resistance and good maneuverability. The bowl is filled by the ejector, which is pulled by a cable and hydraulically. However, the

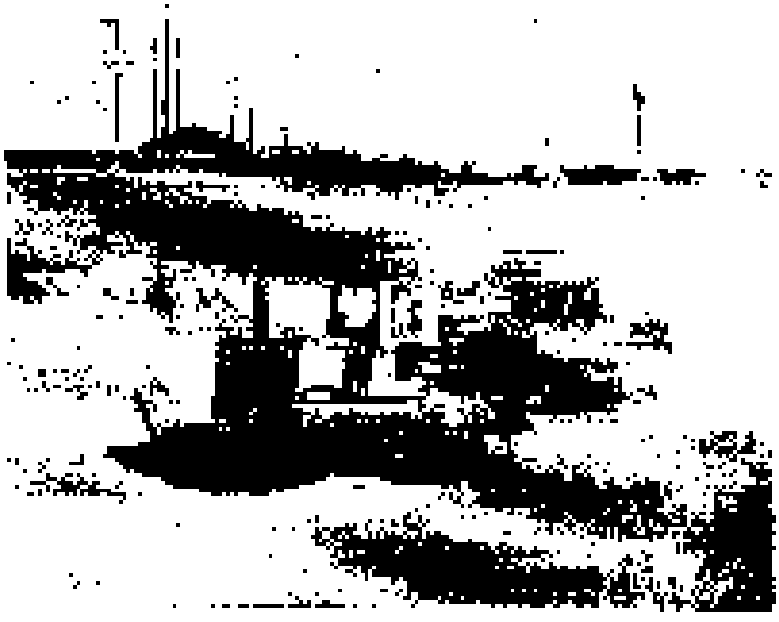

Figure 4-18 Jerstring screen (Co. tests of Costa de [illegible])

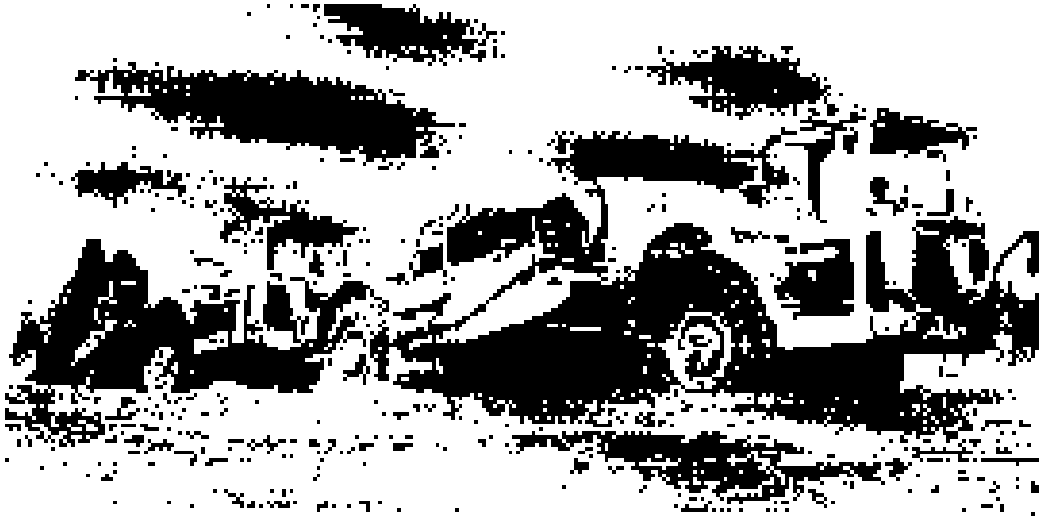

Figure 4-19 Twin [illegible] screen loading [illegible] (Oil [illegible] Corporation)

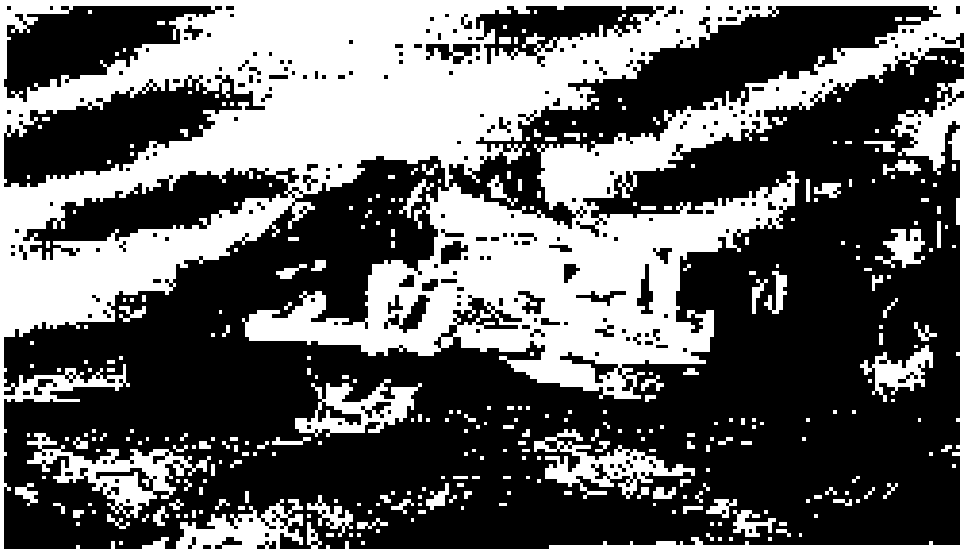

Figure 4-20 [illegible] Company

[illegible]

Estimating Scraper Production

Scraper cycle time is defined as the sum of fixed cycle time and variable cycle time. Fixed cycle time includes spotting, loading, maneuvering and dumping. Spotting represents the time required for a scraper to position itself in the material to be loaded, including any adjustments required. Table 4-[illegible] provides typical values of fixed cycle time for scrapers.

Variable cycle time is travel time, including loaded time, return time. As noted, loaded and return times are determined by the use of travel-time curves to be used for average speed [illegible] the scraper [illegible] is usually necessary to [illegible] a loaded [illegible] the [illegible] resistance rated. The rolling resistance rating is the total resistance rated. The rolling resistance rating is the total resistance rated. The rolling resistance rating is the total

Figure 4-21 [illegible] Scrapers. (Courtesy of [illegible] Company)

Table 4-7 Scraper fixed time (min)

	Spot Time	
Conditions	Single Pusher	Tandem Pusher
Favorable	0.7	0.[illegible]
Average	[illegible]	0.7
Unfavorable	0.5	0.5

	Load Time				
Conditions	Single Pusher	Tandem Pusher	Elevating Scraper	Auger	Push-Pull*
Favorable	0.7	0.4	0.0	0.7	0.7
Average	[illegible]	0.5	1.0	[illegible]	[illegible]
Unfavorable	[illegible]	0.6	1.5	[illegible]	[illegible]

	Maneuver and Dump Time	
Conditions	Single Engine	Twin Engine
Favorable	[illegible]	0.2
Average	0.7	0.5
Unfavorable	1.0	0.6

*Equipment [illegible]

EXAMPLE 4-8

Determine the economics of a single-equipment two-axle tractor-trailer combination [illegible] based on the following information:

Maximum heaped volume = [illegible] (24 LCM)

Maximum payload = 75,000 lb (34,020 kg)

Material: Stone [illegible] 2250 lb/LCY (1,338 kg/LCM)

[illegible] (per day)

Cycle time = 50 min/h

Operating conditions = [illegible]

Single-[illegible]

Hourly [illegible]

Section 1: Fixed hauling [illegible]

Section 2: [illegible] 15 grade, 20,000 ft (6,100 m)

Section 3: Fixed [illegible]

Section 4: [illegible] grade, 2,000 ft (610 m)

Section 5: Fixed [illegible] (30,000 ft (9,150 m))

SOLUTION

Load [illegible] cycle:

$$\text{Weight of hauler capacity} = [illegible] = [illegible] \text{ lb}$$

$$[illegible] = [illegible] \text{ LCY}$$

Weight exceeds rated payload so 75,000 lb (34,020 kg) therefore, maximum capacity is

$$\text{Load} = \frac{75{,}000}{2250} = [illegible] \text{ loads}$$

$$\left[= \frac{34{,}020}{1{,}338} = 25.4 \text{ loads}\right]$$

Estimated costs:

$$\text{Cost} = [illegible] + \frac{100}{20} = [illegible]$$

$$\left[= [illegible] + \frac{50}{10} = [illegible]\right]$$

$$\text{Return} = [illegible] + \frac{100}{20} = [illegible]$$

$$\left[= [illegible] + \frac{50}{10} = [illegible]\right]$$

$$\text{Turnaround} = \frac{D_{tl}}{S} = 8\%$$

$$\left[= 0 + \frac{52}{15} = 3.5 \right]$$

Total time:

Travel time = 1.07 min		(Figure 4-41)
Stations = 1.06 min		(Figure 4-41)
Stations = 0.75 min		(Figure 4-41)
Total = 3.07 min		

Fixed Operation/Delay time:

$$\text{Fixed operation} = 0.5\ \text{min}$$
$$\text{Load} = 0.6\ \text{min}$$
$$\text{Miscellaneous time} = 0.5\ \text{min}$$
$$\text{Total} = 1.6\ \text{min}$$
$$\text{Total cycle time} = 3.07 + 1.6\ \text{min} = 4.67\ \text{min}$$

$$\text{Estimated production} = 0.64 \times \frac{60}{4.67} = 8.2\ \text{BCY/h}$$

$$\left[= 0.55 \times \frac{60}{4.67} = 7.07\ \text{BCM/h} \right]$$

EXAMPLE 4-9

Solve the problem of Example 4-8 using the average speed method and the performance curves of Figure 4-38.

SOLUTION

$$\text{Payload} = 25.0\ \text{BCY} \times 0.9\ \text{BCM/BCY} = 22.5\ \text{BCM (from Example 4-8)}$$

Efficiency factor (from Example 4-8):

$$\text{Haul} = 0.95$$
$$\text{Return} = 0.95$$
$$\text{Turnaround} = 0.95$$

Maximum speed (Figure 4-39):

$$\text{Haul} = 0.95 \times 52\ \text{km/h}$$
$$\text{Return} = 0.95 \times 52\ \text{km/h}$$
$$\text{Turnaround} = 0.95 \times 15\ \text{km/h}$$

Average speed factor (Table [illegible]):

$$\text{Taxi} = 0.56 \times 0.85 = 0.74$$

$$\text{Climb} = 0.89$$

$$\text{Turnaround} = 0.68$$

Average speeds:

$$\text{Taxi} = 25 \times 0.74 = 19\ \text{mph}\ (31\ \text{km/h})$$

$$\text{Climb} = 15 \times 0.89 = 13\ \text{mph}\ (22\ \text{km/h})$$

$$\text{Turnaround} = 25 \times 0.68 = 17\ \text{mph}\ (28\ \text{km/h})$$

Travel times:

$$\text{Taxi out} = \frac{2.06}{21 \times 0.9} = 0.97\ \text{min}$$

$$= \left[\frac{6.0}{18 \times 0.7} = 0.95\ \text{min}\right]$$

$$\text{Climb out} = \frac{3.00}{19 \times 0.8} = 1.97\ \text{min}$$

$$= \left[\frac{6.0}{21 \times 0.7} = 1.27\ \text{min}\right]$$

$$\text{Turnaround} = \frac{4.0}{19 \times 0.8} = 2.63\ \text{min}$$

$$= \left[\frac{1.5}{21 \times 0.7} = 0.96\ \text{min}\right]$$

$$\text{Total} = 5.56\ \text{min}$$

$$\text{Average cycle} = 5.5\ \text{min}$$ (Example 8)

$$\text{Time cycle time} = 4.94\ \text{min}$$

$$\text{Estimated production} = 22 \times \frac{60}{1.06} = 1{,}245\ \text{flights/yr}$$

$$= 17.9 \times \frac{50}{4.06} = 1{,}245\ \text{flights/yr}$$

Note: The travel times of Example 4–4 (in. 5) seem to have resulted from an average velocity of 7 mph (9 km/h) upon leaving the gate, 11 mph (18 km/h) upon entering the runway, and 17 mph (28 km/h) upon entering the gate. The result of adding negative taxi times for several aircraft to become airborne or the use of the time for a takeoff and the time for a landing would have greater than [illegible] of the average speed method. The time estimate obtained by the use of the average speed method should be more realistic.

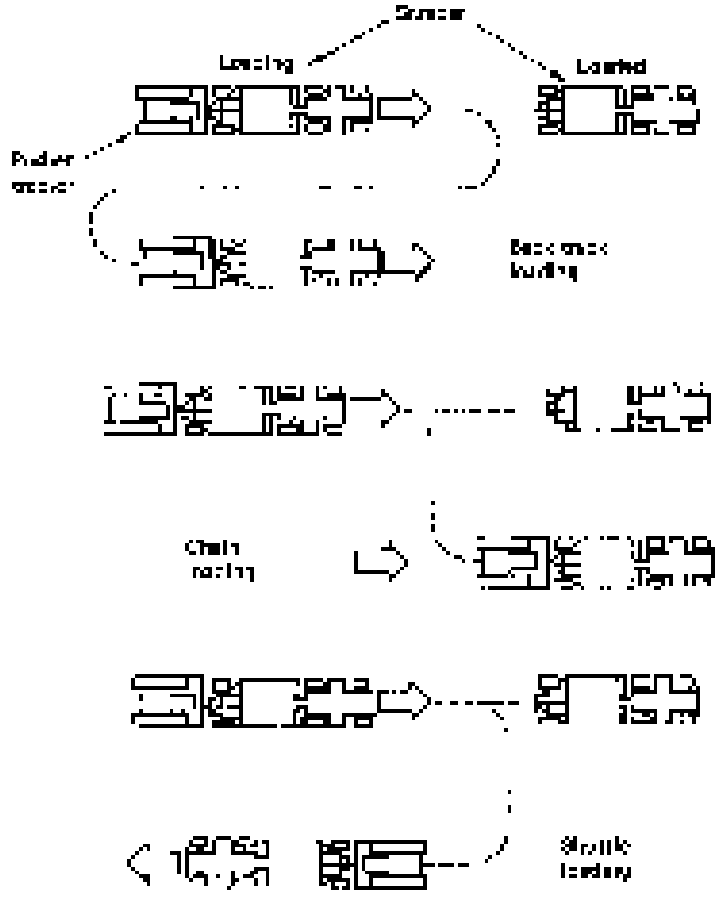

Figure 4.22 Mechanism of push-loading sensors.

Push-Loading

Except for loading pulleys, and cash pull, a space-wheel assembly requires [illegible] to present unused pulleys to the machine. [illegible] three basic methods of push-loading are presented in Figure 4.22. The back-stroke method is most commonly used since it permits all workers to add at the same time. However, it is also the slowest of the three methods because of its additional machine-level distance. Chain loading [illegible] machine, however, [illegible] shuttle loading requires [illegible] for [illegible] operations.

A typical state initial code consists of [illegible] while the pusher moves [illegible] and [illegible] the pusher [illegible] the sequence of [illegible] and [illegible]. The [illegible] pusher [illegible]

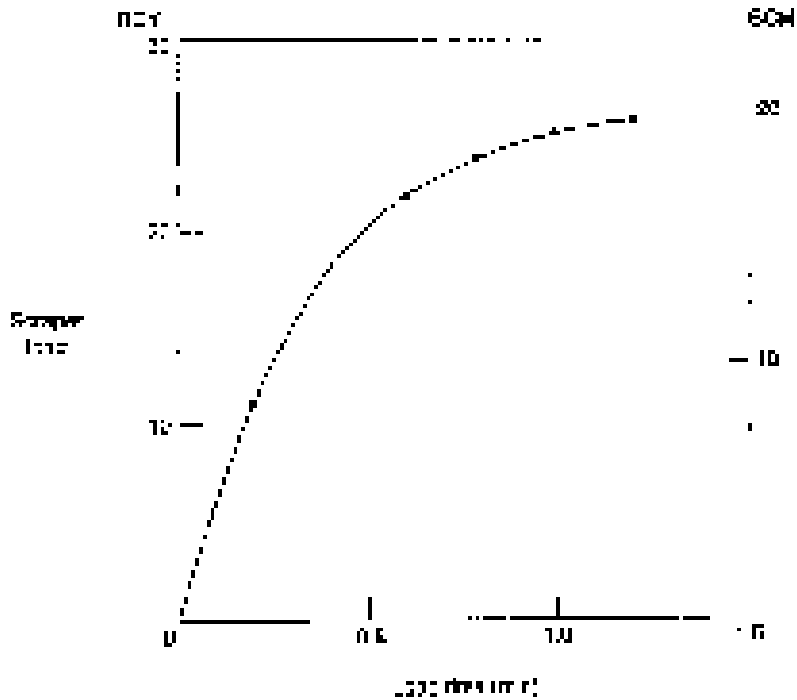

Figure 4-29 A load growth curve.

[illegible] probes reduce scraper load time and increase the results in exceeding target scraper loads. The data [illegible] described in section 4 [illegible] can be used to determine the optimum load time for a single operator and no more than in coordination between two operators.

Optimum Load Time

In field studies performed by Caterpillar Inc., it was found that the scraper loading curve which yielded the [illegible] production was given in [illegible] less than the loading time required to reach the maximum scraper load. Caterpillar called the loading time which yielded maximum production the optimum load time. A simple method for determining the optimum load time is described below.

To determine the optimum load time, it is first necessary to plot the volume of scraper load versus loading time. To do this, [illegible] permit the loader to operate at a given load weight, recording the loading time. The load weight is then increased and the process repeated. [illegible] Figure 4-29. [illegible] the shape of the load growth curve [illegible] loading [illegible].

A simple method [illegible] determining the optimum load time is illustrated in Figure 4-30. First, extend the horizontal axis of the load growth curve to the left of the origin. Next, locate a point (A) on this axis whose distance from the origin represents total

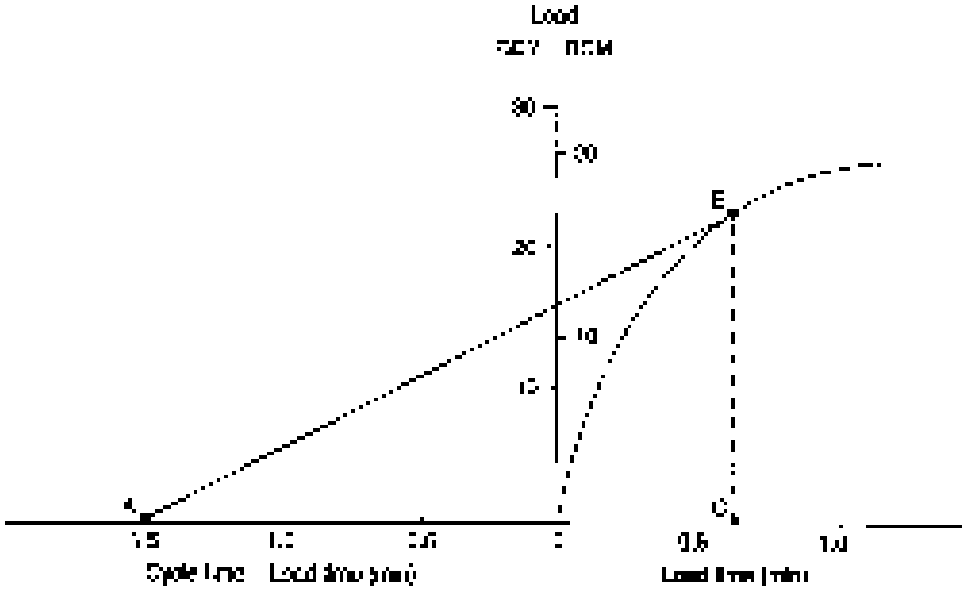

Figure 4–24 Finding the pusher cycle time

Table 4–6 Typical pusher cycle times (min)

Loading Method	Single Pusher	Tandem Pusher
Backscraper	1.5	.1
Shovel or dozer	1.0	[illegible]

cycle time less loading time." Finally, the [illegible] is plotted against the curve for [illegible]. Point A intersecting the curve at Point B. The loading time (C) [illegible] with the pusher cycle time. To [illegible] this value for the [illegible] A, represents total scraper cycle time and E–C represents the corresponding volume per cycle. The slope of the line A–E [illegible] represents the [illegible] per unit of time. When the slope of A–E is at a maximum, the scraper [illegible] permits the [illegible] to be used.

Calculating the Number of Pushers Required

The number of scrapers that can be [illegible] by one pusher without a scraper waiting is [illegible] and is calculated by the [illegible] Equation 4–11. The number of pushers required to fully [illegible] a given scraper fleet may [illegible] from Equation 4–12. It is suggested that [illegible] of [illegible] from Equation 4–[illegible]. The results [illegible] to one decimal place for [illegible] Equation 4–[illegible] [illegible] obtained from Equation 4–[illegible]. [illegible] the number to round the [illegible] number of pushers. [illegible] the [illegible] scraper cycle time has [illegible] been presented. Table 4–[illegible] may be used for estimating pusher cycle time.

$$\text{Number of scrapped parts} = \frac{\text{Scrap cycle time}}{\text{Product cycle time}} \qquad (4\text{–}11)$$

$$\text{Number of parts required} = \frac{\text{Number of scrapped parts}}{\text{Number scrapped by one machine}} \qquad (4\text{–}12)$$

When the number of parts actually produced is less than the number required, some of the parts must be scrapped later. Increased production is necessary to offset additional scrap. Equation (4–10) can be used for finding this calculation. Use the positive number of parts required rounded to integer value.

$$\text{Production} = \frac{\text{No. of parts required}}{\text{Scrapped parts}} \times \text{No. of scrapped parts} \times \text{Production per scrapped part} \qquad (4\text{–}13)$$

EXAMPLE 4–10

The estimated cycle time for a steel stamper is 0.5 min. Calculate the number of parts required to produce 1000 of the stamped parts using single punches. Determine the results for both scrapped and non-holding punches.

SOLUTION

Number of parts required per machine (Eq. 4–11):

$$\text{Rack mode:} \quad \frac{0.5}{1.5} = 0.3$$

$$\text{Chute:} \quad \frac{0.5}{1.0} = 0.5$$

Number of parts required (Eq. 4–12):

$$\text{Rack mode:} \quad \frac{3}{0.3} = 10 \text{ parts}$$

$$\text{Chute:} \quad \frac{4}{0.5} = 8 \text{ parts}$$

EXAMPLE 4–11

Determine the annual production of the stamped part of Example 4–10 if only one machine is available for the non-holding punch and chute. Expected production of a single stamped part is 0.5 lb/Min.

SOLUTION

Number of parts required for 1000 stamped parts = 10

$$\text{Production} = \frac{1000}{10} \times 0.5 \text{ lb} = 50 \text{ lb/yr} \qquad (\text{Eq. } 4\text{–}13)$$

$$\text{Production} = \frac{1000}{8} \times 0.5 \text{ lb} = 62.5 \text{ lb/Min} \qquad (\text{Eq. } 4\text{–}13)$$

Push-Pull Loading

[illegible]

1. The first scraper [illegible] the [illegible] load.
2. The second scraper arrives [illegible] and pushes the first scraper to assist in loading.
3. When the [illegible] scraper is loaded, the pusher is disengaged. The second scraper then begins to load with the first scraper pulling it [illegible].
4. The two scrapers [illegible] and [illegible] to the haul road [illegible].

[illegible]

Job Management

[illegible]

- [illegible]
- [illegible]
- [illegible]
- [illegible]
- [illegible]
- [illegible]

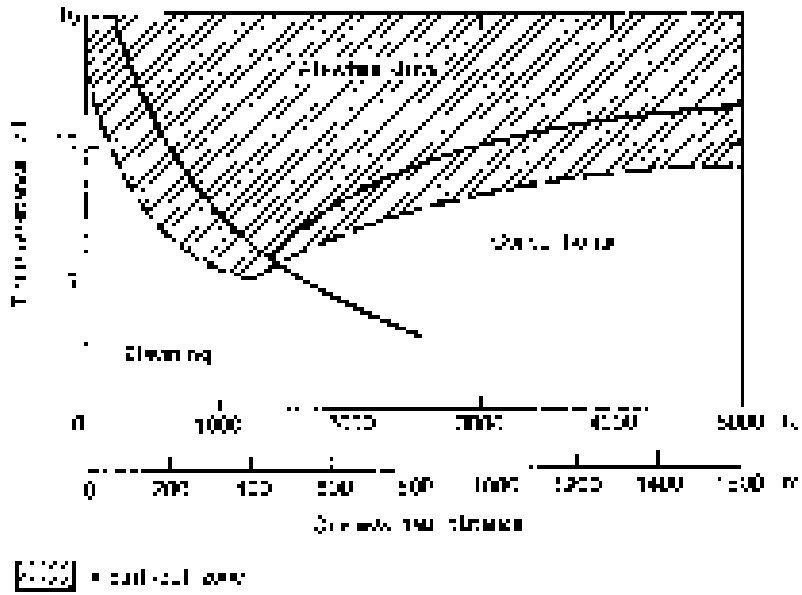

Figure 4-25 Scraper application zones.

- Keep the scraper cycle time as short as possible to minimize cycle time in the pit
- Reduce spillage and fill if spreading time is excessive

Supervisory control is a method of using a computer to control load and haul units to be used to maintain production. Scrapers can be logged by a spotter and the data sent to a central monitoring station. Scraper chalkboards have a counter attached to them so the crew can be replaced by a spotter or supervisor by radio units.

4-5 TRUCKS AND WAGONS

Operation and Employment

Haul trucks are the most versatile of all earthmoving equipment. They are used in many different types of mining operations and in other construction activities. In addition to rock, they can haul ore, coal, and other bulk materials. Because of their versatility, they are used in many different types of mining and construction operations. Trucks are used for the movement of bulk material in a small area, such as a stockpile, or over long distances, such as from a pit to a processing plant. However, trucks are capable of operating in a small area or over long distances. They

[illegible]

[illegible]

Figure 4-26 A 40-ton rear dump truck. (Courtesy of Volvo Construction Equipment North America, Inc.)

Figure 4-27 All-wheel-drive articulated dump truck. Courtesy of CNH Heavy Construction

[illegible]

Determining the Number of Haul Units Needed

[illegible]

$$\text{Load time} = \frac{\text{Haul unit capacity}}{\text{Loader production at 100\% efficiency}} \qquad (4\text{–}14)$$

$$\text{Load time} = \frac{\text{Number of buckets} \times \text{Bucket cycle time}}{\text{Bucket capacity}} \qquad (4\text{–}15)$$

Figure 4–28 Bottom-dump wagon. (Courtesy of LeTourneau Corporation)

Table 4-9 Spot, maneuver, and dump times for trucks and wagons (min)

Condition	Bottom Dump	Rear Dump
Favorable	[illegible]	0.5
Average	[illegible]	1.1
Unfavorable	2.0	2.5

The reason for using the maximum loading rate based on 100% volumetric efficiency in Equation 4–[illegible] is that excavators have been found in operation at less than 100% efficiency when actually loading. This fact and the 100% efficiency loading rate in order to insure that an adequate number of trucks is provided so that the excavator will not have to wait for a truck. Other sorts of loss factors may be used in Equation 4–[illegible] but in some cases must be used in both numerator and denominator.

The number of trucks theoretically required to keep a loader fully occupied and thus maximize the full production of the system can be calculated by the use of Equation 4–16. Although this method gives a minimum number of trucks to be required, it should be recognized that some increase in the number of trucks will actually be needed to cover the field overall's nonuniform cycle times. Thus, prior to the use of the formula, variations in haul and dump cycle times will need to be considered. More realistic results may be obtained by the use of computer simulation techniques or by the use of the modified Eckhoff formula, shown as governing theory (see reference 5).

$$\text{Number of trucks required (nearest 0.5)} = \frac{\text{Haul and dump cycle times}}{\text{Loading time}} \qquad (4\text{–}16)$$

The result obtained by using Equation 4–16 must be rounded up to the next integer. Using this method, the expected production of the loader/truck system is maximized, although the overall cycle times will simply increase and stay flat. Regardless of the procedure, system output is seldom equal to the loader output, considering the overall job efficiencies involved. However, the number of trucks required is calculated using 100% loader efficiency.

If more than the theoretically required number of trucks is supplied, no increase in system production will occur, because system output is limited to loader output. However, if it is found that the required number of trucks is supplied, system output will be increased because the loader will not have to wait for a truck.

The expected production of the shovel may be calculated by the use of Equation 4–17. In performing this calculation, use the average value of N_t not its maximum value.

$$\text{Expected production of the shovel (tons/hr)} = \frac{\text{Average number of trucks}}{t_s} \times \text{Payload of truck (tons)} \qquad (4\text{–}17)$$

EXAMPLE 4–12

Given the following information for a shovel-truck operation, (1) calculate the number of trucks theoretically required and the production of this combination, (2) calculate the expected production of the shovel, and (3) calculate the shovel production if the number of trucks allowed is only two.

Shovel truck cycle time (100% efficiency) = 0.71 hr (42.6 min)

Job efficiency = 0.75

Truck capacity = 20 BCY (15.3 BCM)

Truck capacity (in tons, excluding swell) = 27.1

SOLUTION

(1)

$$\text{Shovel time} = \frac{20}{27.1} = 0.7041 \text{ hr} \qquad (\text{Eq. } 4\text{–}1)$$

$$\left[\frac{15.3}{27.1} = 0.564\right]$$

$$\text{Truck cycle time} = 3.5 + 0.254 = 3.754\ \text{h}$$

$$\text{Number of trucks required} = \frac{3.754}{0.254} = 14.8 \approx 15 \qquad \text{(Eq. 12)}$$

$$\text{Equipment production} = 271 \times 0.75 = 203\ \text{BCY/h}$$

$$[= 98.7 \times 0.75 = 74.0\ \text{BCM/h}]$$

Crew and equipment are available.

$$\text{Expected production} = \frac{8}{15.0} \times 203 = 108\ \text{BCY/h} \qquad \text{(Eq. 13)}$$

$$\left[= \frac{8}{15.0} \times 74.0 = 39.5\ \text{BCM/h}\right]$$

Job Management

Job management consists of the selection of equipment and methods and the effect of the size of the crew. Human factors and management have a major effect on the efficiency of the operation. If the crew is not adequately trained and supervised, cycle times will be longer. Studies have shown that the actual hourly rate of production may range from 10 to 40% of the rated capacity of the equipment. Factors affecting the efficiency of the equipment include the operator's skill, the condition of the equipment, the job conditions, and the management of the job. Hard rock drilling equipment may operate at 30 to 50% of its rated capacity. Because of the time required for moving, standing, and drilling, equipment capacity is frequently less than 50% of the rated capacity

[illegible] [illegible] [illegible] [

a. [illegible] economically [illegible] maximum production?
b. What is the equal production of the system if [illegible] number of trucks?
c. What is the equivalent [illegible] $[illegible]/yr?

5. A [illegible] motor [illegible] weight [illegible] is 35,720 lb [illegible] 17,860 lb; has a gross weight of 70,400 lb [illegible] and surface [illegible] dry [illegible] with a rolling resistance factor of [illegible], what is the maximum grade the scraper could [illegible]?

6. What is the pull-in force? What is [illegible] conventional [illegible]?

7. Write a computer program to calculate the number of passes required in a specified scraper [illegible] Your program should include a [illegible] to perform hauling, [illegible] angle or [illegible] Using your program [illegible] Example [illegible]

REFERENCES

1. [illegible] Rubber [illegible] Report No. [illegible] U.S. Department [illegible] Federal Highway Administration [illegible] Virginia, [illegible].
2. [illegible] Dean & Company, Moline, Il.
3. [illegible] J. [illegible] and [illegible] Dalmar, [illegible] Report No. [illegible] Department of Transportation, Washington, D.C. [illegible].
4. [illegible] Dean & Company, Moline, Il.
5. [illegible] Cleveland, O.H.
6. [illegible] W. Management [illegible] Publ. Dover Publ. Inc., New York, N.Y., [illegible].
7. [illegible] Balkema [illegible]

5

Compacting and Finishing

5-1 PRINCIPLES OF COMPACTION

The Compaction Process

[illegible]

[illegible]

[illegible]

[illegible]

[illegible]

[illegible]

[illegible]

[illegible]

[illegible]

[illegible]

[illegible]

[illegible]

[illegible]

Optimum Moisture Content

Although [illegible] of the [illegible] in [illegible] compaction [illegible] is a very important [illegible] [illegible] called [illegible] [illegible] moisture [illegible] [illegible] [illegible]

[illegible]

[illegible]

[illegible]

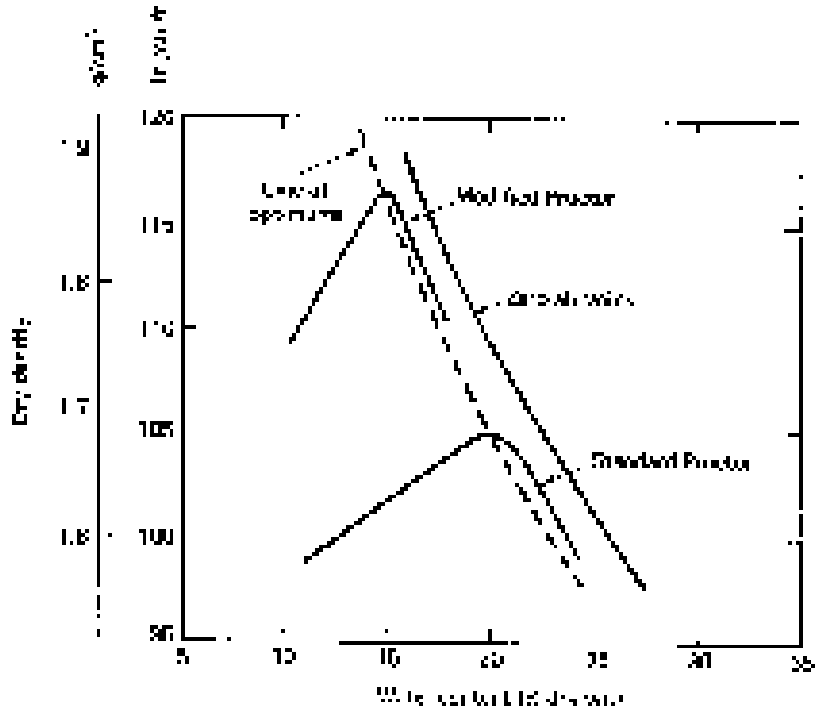

Figure 5–8 [illegible] test results.

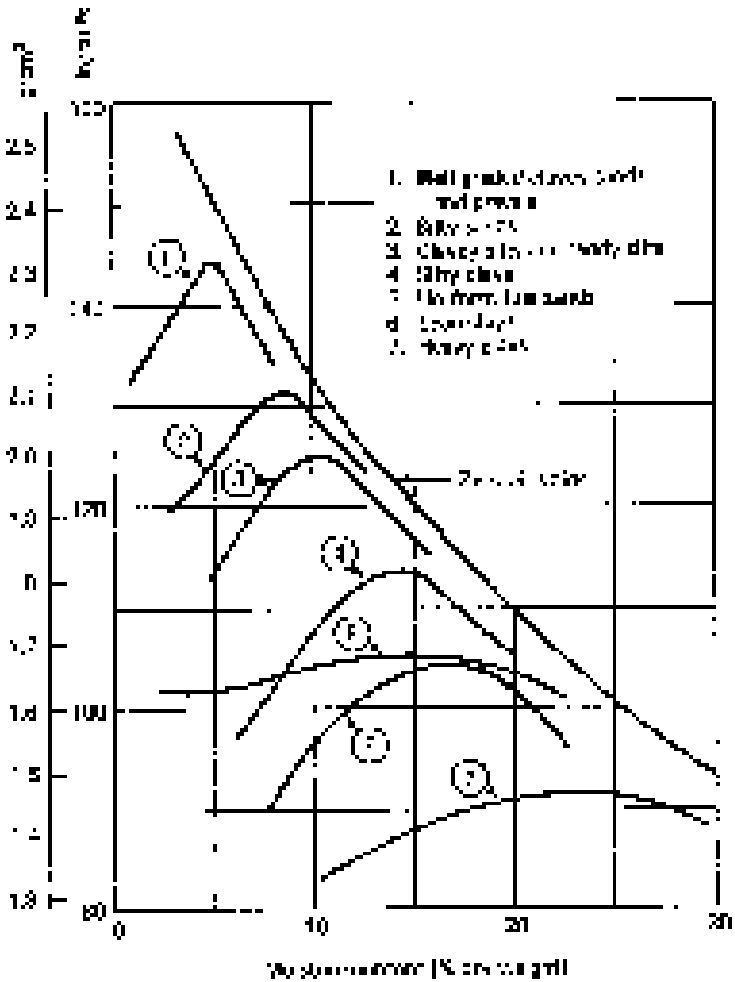

Figure 5–2 Modified Proctor Test results for various soils. (Courtesy of Dr. Harvey E. Wahls)

moisture content between 15 and 23. However, density of 105 pcf (16.5 kN/m³) can only be achieved at a moisture content of 23%. Relationships among field and laboratory results for various soils, or more typical equipment and varying degrees of compactive effort, are discussed in Section 5–2.

Compaction Specifications

Compaction specifications are intended to ensure that the compacted material provides the required engineering properties. A satisfactory level of uniformity is achieved by specifying limit values for properties or parameters intended to describe the characteristics of the material in its compacted condition. Uniformity of the achieved fill properties is ensured by specifying a maximum density requirement. The specifications

[illegible] density requirements. This is the specification of a state that a certain percentage of Standard Proctor or Modified Proctor density must be obtained. For the sake of [illegible] 100% of Standard Proctor density corresponds to a dry density of 105 lbs/ft³ (1.68 g/cm³). This specification requirement for 95% of Standard Proctor density corresponds to a minimum dry density of 99.8 lbs/ft³ (1.60 g/cm³).

Typical density requirements range from 90% of Standard Proctor to 100% of Modified Proctor. For example, 95% of Standard Proctor is often specified for earthwork in [illegible] and roadbeds, a requirement of 90% of Modified Proctor is typical for the upper [illegible] of a road. For the upper [illegible] and improvement zone, corresponding to a high-volume [illegible] 95 to 100% of Modified Proctor is commonly used.

A lack of uniformity in compaction may result in excessive settlement of structures or the pavement in the form of ruts in pavements. The aim, then, is to prevent the uniform compaction be achieved. Uniformity is commonly controlled by specifying a minimum variation of density between adjacent areas. Compaction specifications may range from performance specifications in which only a minimum dry density is prescribed to detailed specifications that state the exact equipment and procedures to be used. (See Section 15.4 for a discussion of specifications.)

Measuring Field Density

To verify the adequacy of compaction, the density for an inspection must be obtained in the field. Moisture is measured and compared with the specified range. (Comparison of original parameters in Section 15.2.) The methods available for performing in place density tests include a number of traditional methods: sand cone, sand area, drive cylinder, balloon, nuclear density gauges, and equipment-mounted compaction measurement systems. As for the traditional methods, the sand cone involves removing a material sample, measuring the volume of the hole, and then determining the dry weight of the material removed. Dry density is the dry weight of material removed divided by the volume of the hole.

Liquid displacement measures the volume of material removed by measuring the volume of liquid required to fill the hole. A liquid fluid such as water or oil is poured into the hole. Alternatively, a balloon can be used to measure the volume of the hole. A balloon is placed over the hole and inflated to fill the hole. The volume of the hole is found by dividing the weight of the material by its density. The volume of the hole is then used to calculate the dry density.

Nuclear density gauges measure the amount of radioactivity from a radioactive source that is reflected back from the material. The material in question has both moisture and moisture content. When property is designed and specified, these gauges can be used to provide results in a few minutes. The time required to perform traditional methods can be considerable. The portability of the equipment has greatly increased the use of nuclear density determinations. This will be especially beneficial when the density is being [illegible]. As a result, the use of nuclear density devices is becoming widespread.

Automation (GPS) systems that measure original density, temperature, and moisture content are also available. Manufacturers claim that they are highly accurate and easier to use than [illegible]

[illegible] devices. When properly calibrated, such devices [illegible] as the [illegible] devices.

Regardless of the method for field measurement of compaction results, comparison [illegible] to specific specifications and control systems are being utilized by a number of [illegible] equipment manufacturers. In addition to measuring and recording the material density actually achieved, some systems control the energy being delivered by the compactor [illegible] the adaptation of the material. Some systems also [illegible] the [illegible] of the [illegible] equipment. Measurement devices which provide a continuous record of compaction results over the entire area are [illegible] reliable for providing people with [illegible] information.

5–2 COMPACTION EQUIPMENT AND PROCEDURES

Types of Compaction Equipment

Principal types of [illegible] compaction equipment include the [illegible] rollers, vibratory compactors, smooth-wheel rollers, pneumatic-tire rollers, segmented pad rollers, and impact [illegible] (see Figure 5–9).

Tamping foot rollers utilize a [illegible] drum equipped with [illegible] tamping feet. Tamping foot rollers are available in a variety of [illegible] and sizes, ranging from very small rollers [illegible] through individual [illegible] collectively measure the [illegible] of and strike [illegible] the lower portion of the [illegible] penetrate the lower layers of the surface [illegible] of the soil. All tamping foot rollers [illegible] static weight and are [illegible] to achieve compaction. Therefore, they are most effective on cohesive soils. While the shape [illegible] produces some impact [illegible] and [illegible] the soil, the [illegible] and remove the soil. Many types of tamping foot rollers [illegible] original [illegible] material [illegible] soil [illegible] easily and [illegible]. These types of rollers are [illegible] compaction [illegible]. Highway [illegible] compactors [illegible] spaced [illegible] with [illegible] strength [illegible] these [illegible] impact [illegible] approaching [illegible].

Smooth-wheel rollers utilize a compactor drum made up of a heavy steel cylinder. Because of their design, they can be operated at high speed without [illegible] to move [illegible] compacted. Compaction is [illegible] static weight and [illegible] limited [illegible]. Smooth-wheel rollers are most effective [illegible] granular soils. They can also be used to break up [illegible] soil. They are [illegible] [illegible] compaction [illegible] soil [illegible] using [illegible] [illegible] Angeles [illegible] Test).

Vibratory compactors are available in a wide range of sizes and types. In size they range from small [illegible] operated compactors (Figure 5–9) through [illegible] self-propelled units (Figure 5–9). Many vibratory [illegible] include [illegible] compactors, smooth-drum rollers, and tamping foot rollers. Small walk-behind vibratory plate compactors and vibratory rollers are most [illegible] for [illegible] and other [illegible] areas. Vibratory plate compactors are also [illegible] for [illegible]. The [illegible] and self-propelled [illegible] are [illegible] compaction. Impact or [illegible] smooth-drum vibratory rollers are often [illegible] for [illegible] applications. Vibratory [illegible] with [illegible] vibratory compactors are most effective in compacting cohesionless soils.

SMOOTH, STEEL-WHEELED ROLLER

SELF-PROPELLED VIBRATING ROLLER

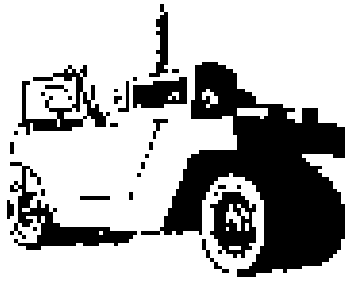

SMALL, MULTI-TIRED PNEUMATIC ROLLER

HEAVY PNEUMATIC ROLLER

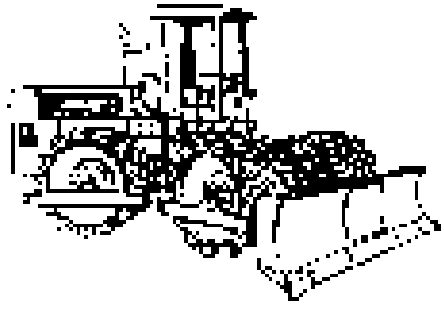

SELF-PROPELLED TAMPING FOOT ROLLER

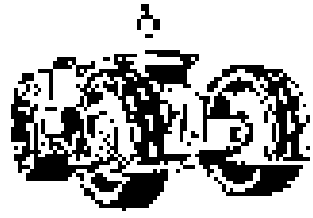

SELF-PROPELLED SEGMENTED STEEL-WHEELED ROLLER

TOWED SHEEPSFOOT ROLLER

GRID ROLLER

Figure 3-3 Major types of compaction equipment. (Reprinted by permission of Caterpillar Inc. 1975)

Figure 5.4 Walk-behind vibratory plate compactor. (Courtesy of Wacker Corp.)

they may also be effective in densifying cohesive soil when operated at low frequency and high amplitude. Many vibratory compactors can be adjusted to vary both the frequency and amplitude of vibration.

Small rollers or compactors are used for small or specialty projects, such as repairs, trenches, and asphalt overlays. Types available include steel-drum rollers, self-propelled rollers, self-propelled rollers (called "wheels"), pneumatic-tire rollers, and tandem rollers. The compaction force in a roller is primarily static weight.

Pneumatic-tire rollers are available in light-duty, medium-duty, and heavy-duty models. While rubber-tire rollers are multi-wheel units with each wheel mounted on an axle so that they operate independently of the other wheels, tandem rollers have two axles, one in front and one in back. Heavy and more active weights up to 20 tons are used for dam construction, compaction of sanitary landfills, and pavement rolling. Environmental concerns of noise and emissions have led to the use of electric motors and diesel engines.

Sheepsfoot and rollers are generally similar to smooth-drum rollers except that they have projections or protrusions on the drum. The projections are of different shapes, but they generally have a flat face that is perpendicular to the surface of the drum. The projections are effective in compacting cohesive soils.

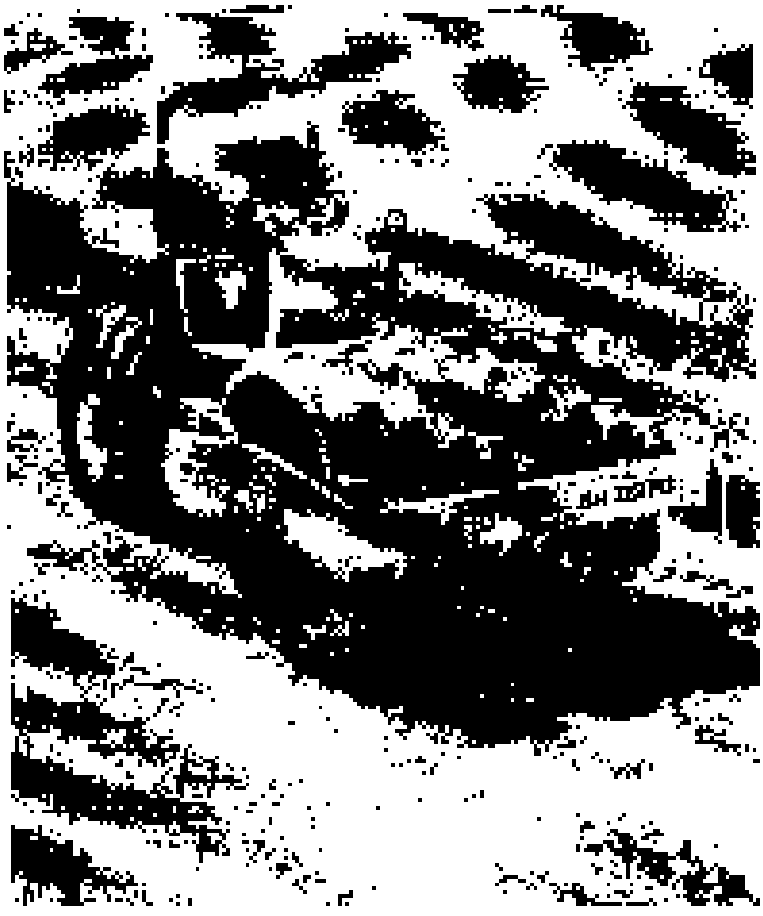

Figure 5–5 Vibratory tamping foot compaction. (Courtesy of Bomag GmbH)

Rollers are simple machines that compact primarily by their weight. Some are used for compaction in confined areas. Some rollers, like the one shown in Figure 5–6, are classified as vibratory rollers because of their operating frequency.

Compaction in Confined Areas

The equipment available for compaction in confined areas is very large. Some are around handheld. Includes small vibratory plate compactors (Figure 5–4), impact compactors (Figure 5–5), mechanical static or vibratory rollers (Figure 5–6), and attachments for wheel loaders, backhoes, etc.

Figure 5-6 [illegible] (Courtesy of Wacker Corp.)

Figure 5-7 [illegible] (Courtesy of Wacker [illegible])

Figure 5-8. Compactor from wheel mounted on hydraulic excavator. (Courtesy of American Compaction Equipment, Inc.)

Compactors which normally are used in conjunction with excavators include compactor wheels and vibratory plate compactors. These compactors are highly maneuverable and are especially suitable for compacting the material in deep excavations and narrow trenches. Due to safety considerations, operators often limit the safety hazards involved in having a compactor operator down in the trench.

Compactor wheels (Figure 5-8) are small compactors similar in design to a stamping foot roller. They are usually mounted on a standard hydraulic excavator.

Vibratory plate compactors (Figure 5-9) are small, manually guided compactors which are powered by the hydraulic system of the equipment on which they are mounted.

Characteristics of typical compactors for various areas are given in Table 5-2.

Selection of Compaction Equipment

The proper selection of compaction equipment is an important factor in obtaining the required soil density with a minimum expenditure of time and effort. The following Figure 5-10 provides a rough guide for the selection of compaction equipment based on soil type

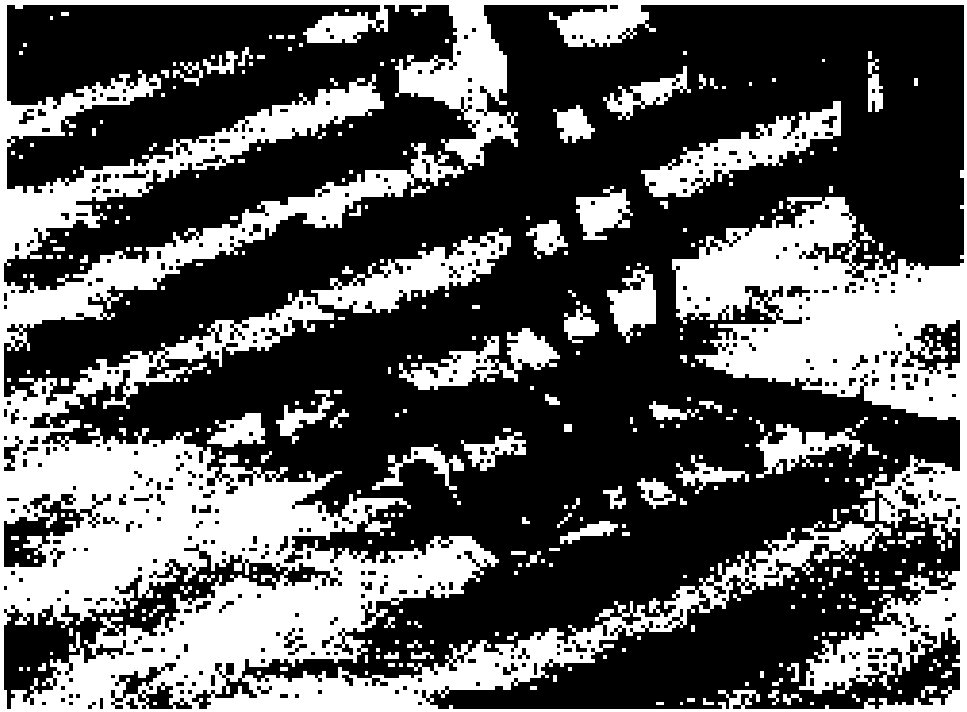

Figure 5-9 Vibratory plate compactor [illegible] (Courtesy of Ingersoll-Rand Company)

Table 5-2 Comparison for compacted [illegible]

Type	Weight [lb(kg)]	Power [hp(kW)]	Freq [vpm]	Force [lb(kN)]	Width [in.(cm)]
[illegible]	[illegible]	2–5	300–700	[illegible]	[illegible]
	[illegible]	[illegible]		[illegible]	[illegible]
Vibratory plate	[illegible]	3–14	2580–6325	1820–[illegible]	[illegible]
	[illegible]	[illegible]		[illegible]	[illegible]
Vibratory roller	1000–[illegible]	7–24	[illegible]	3400–[illegible]	[illegible]
	[illegible]	[illegible]		[illegible]	[illegible]
		Excavator Attachments			
Compaction wheel	[illegible]	NA	NA	NA	1–16
	[illegible]				[illegible]
Vibratory compactor	[illegible]	NA	1750–2400	5400–[illegible]	[illegible]
	[illegible]			[illegible]	[illegible]

[illegible]
[illegible]

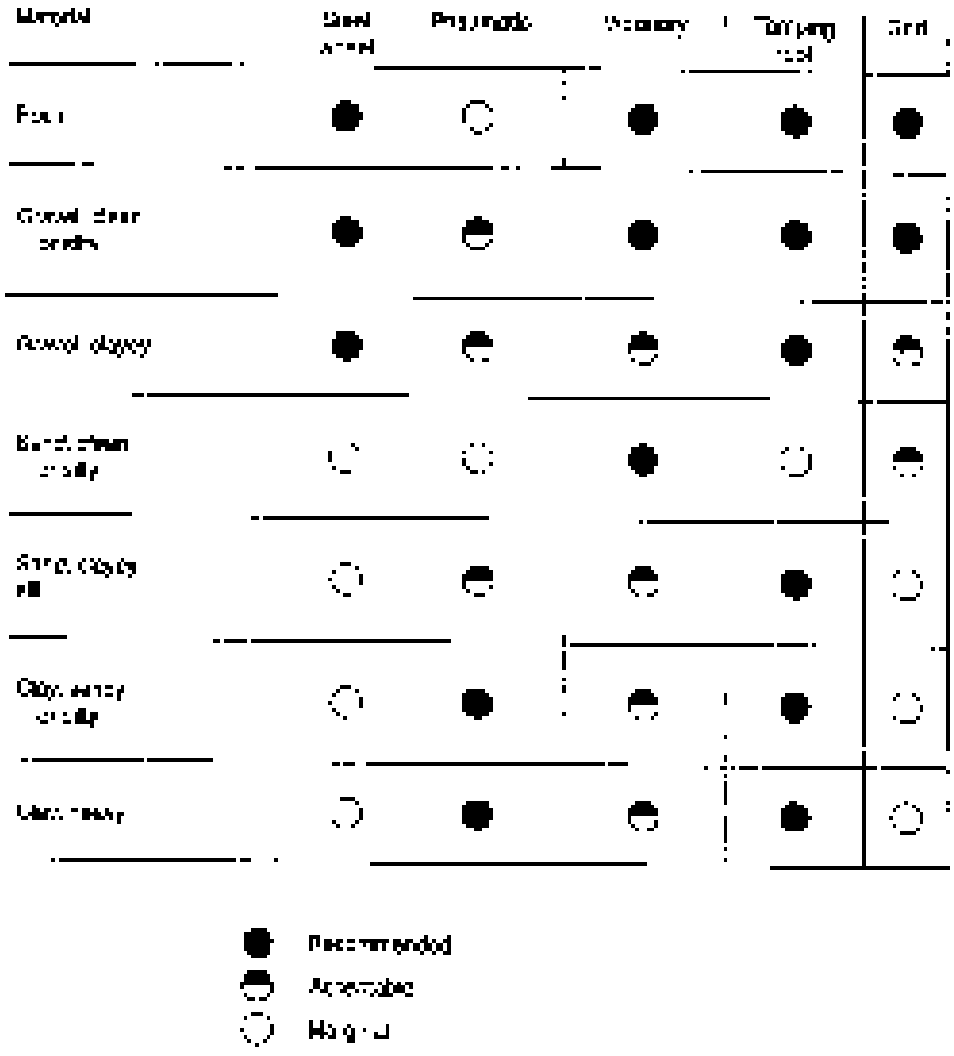

Figure 5-10 Compaction equipment selection guide

Compaction Operations

After selecting appropriate compaction equipment, recommended practices must be established. The major variables are operational parameters such as lift thickness, number of passes used, roller tire pressure, vibration weight, and compaction speed. For field heavy compaction, these variables are controllable by frequency and quality of field inspection or employee.

The general concept of operation consists of the relationship between compaction effort and soil density, as illustrated in Section 5-1. However, it must be recognized that

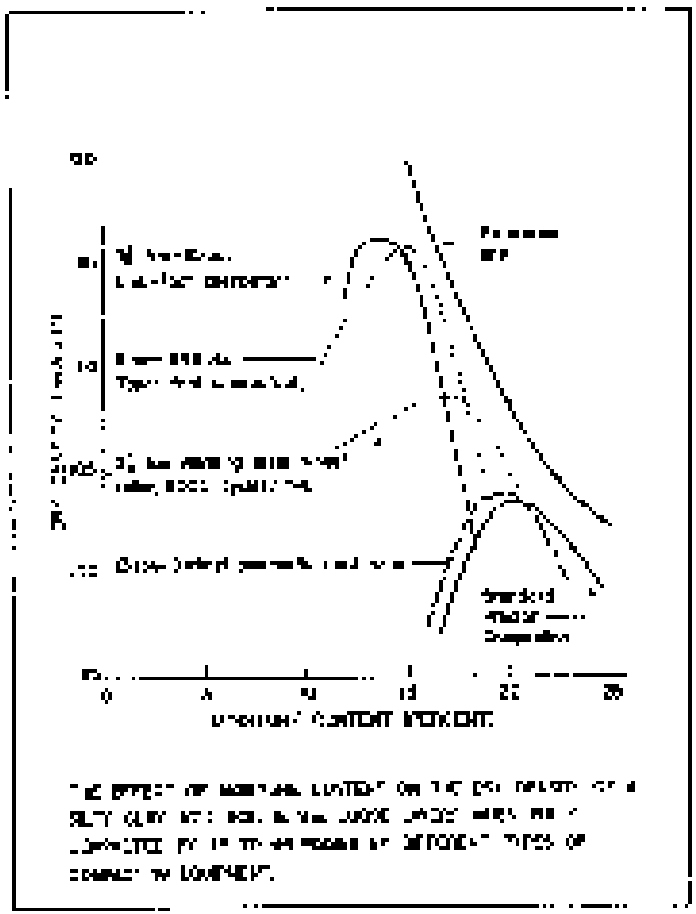

Figure 5.11 [illegible] moisture content [illegible] (from reference [illegible])

[illegible] equipment [illegible] the standard [illegible] field [illegible] moisture content [illegible] particular [illegible] compaction [illegible] laboratory optimum. This is illustrated by [illegible] the laboratory optimum [illegible] field optimum moisture [illegible] laboratory optimum. For plastic soils [illegible] field optimum moisture content is close to [illegible] optimum. For granular soils [illegible] optimum for [illegible] controllers. However, [illegible] field optimum [illegible] laboratory optimum [illegible] controllers. [illegible] soils [illegible] field optimum [illegible] laboratory equipment [illegible] the [illegible] Standard [illegible] optimum. The laboratory compaction equipment [illegible] types of soil [illegible] laboratory equipment.

[illegible] should be [illegible] laboratory compaction [illegible] laboratory [illegible] field [illegible]

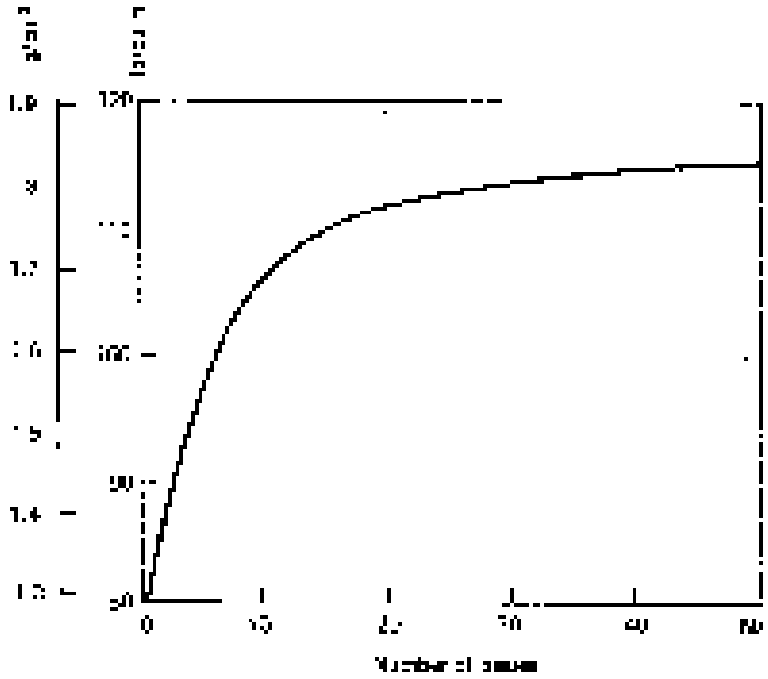

Figure 3-12 Typical sheet of number of passes

is squared. If the thickness of a sheet (or a stack of sheets) can be satisfactorily compacted, then a pass, accompanied with a light nip, may be required to prevent sticking when sheets are stacked. Also see notation for the maximum [illegible] for effective sheet compaction depends on the stable width of the compactor. Appropriate thicknesses for sheets and stacks are given in [illegible] for a [illegible] width [illegible] cylinder [illegible] compactor. Above sheet thickness [illegible] the thickness of [illegible]

The compaction achieved by repeated passes of a conventional dipped roll or roll with a grooved surface, utilized for some [illegible] is less than a roll with a smooth surface using a closer and [illegible] more [illegible] passes. However, as shown in Figure 3-12, the increase in density is [illegible] with the increase for more [illegible] passes.

Ground [illegible] may vary from [illegible] kN/m for a pressure roller [illegible] kN/m for a [illegible] roller. Will in [illegible] found that [illegible] water weight has a [illegible] effect on the compaction achieved, that is on the pressure. The remaining [illegible] roller will [illegible] maintaining a constant [illegible] pressure will be needed [illegible] normal [illegible] pass. Likewise, [illegible] pressure will [illegible] the [illegible] of compaction. The [illegible] [illegible] and dispersion of [illegible]

[illegible] compaction rate falls below [illegible] kg/h/m² (roughly 0.25 t/h/m²) of the surface at [illegible] rollers, it usually indicates that either the material presented is too wet or the roll gap is too tight.

Tests have shown quite a wide variation between roll pairs in the speed at which the same material behaves, even for roll pairs of the same nominal diameter. Some machines produce a dense, well-bonded compact at 0.4 m/s, others need 0.8 m/s to achieve the same density before the material begins to slip or blow through the gap. Because roll wear, surface hardening and bearing condition all change over time, the only reliable way to know the right speed for a particular roll pair is to run a sample of the feed material through it and measure the density of the compact. Manufacturers publish nominal speed ranges, but these should be treated as starting points for a commissioning trial, not as guarantees.

Roll compaction machines are typically specified by roll diameter and roll width. Common roll diameters range from 150 mm for small laboratory units to 800 mm for production machines. Roll widths range from 50 mm for pilot machines to 1 200 mm for large production units. The roll gap, adjustable by shims or by a hydraulic or mechanical stop, controls the thickness of the compact and the pressure applied to the material. Typical roll gap settings for fine powders are between 2 and 6 mm, depending on the bulk density of the feed and the required compact density.

Estimating Compactor Production

Equation 5-17 gives a rough estimate of roll compactor production based on roll width, roll diameter, roll speed, and effective bulk density of the feed. The accuracy of the result obtained will depend on the accuracy of the bulk density and roll gap figures. Roll speeds will usually be limited by the material's ability to enter the roll gap and be compacted before it slips over the roll surface. Typical commercial operating speeds are given in Table 5-3.

$$\text{Production (kg/h)} = \frac{W \times S \times \rho_b \times G \times 3.6}{1000} \qquad (5\text{-}17)$$

$$\text{Production (t/h)} = \frac{W \times S \times \rho_b \times G}{1000} \qquad (5\text{-}18)$$

where W = roll width (m)
S = roll surface speed (m/s)
ρ_b = effective bulk density of the feed (kg/m³)
G = roll gap (m)
3.6 = conversion factor (s/h)
1000 = kg/t

The power required to roll compact a powder is dominated by the work done on the material in the roll gap and by friction between the material and the roll surface. The specific energy consumption for roll compaction of most pharmaceutical powders is in the range 0.2–0.5 kWh/kg, depending on the material's compressibility and the roll gap. Machines with hydraulic roll pressure control can maintain a constant compaction force regardless of feed variation, which is preferred for materials with poor flow properties.

Job Management

[illegible]

Table 5-3 Typical operating speeds of compaction equipment

Compactor	Speed	
	mph	km/h
Tamping foot, crawler towed	3–5	5–8
Tamping foot, wheel-tractor towed	5–10	[illegible]
High-speed tamping foot		
First two or three passes	3–5	5–8
Middle part	5–12	[illegible]
Final passes	12–14	[illegible]
Heavy pneumatic	3–5	5–8
Multiple pneumatic	5–15	8–24
Vibratory		
Crawler-towed	3–5	5–8
Wheel-tractor towed	12–17	19–28
Segmented pad	5–15	8–24
Smooth-drum	2–4	3–6
Vibratory		
Plate	0.8–1.2	1–2
Roller	1–2	2–3

dam construction is simply not warranted. Do not use heavy compaction equipment on thin compacted layers or near trench walls, as it may damage the trench or structures above it.

Traffic patterns and material can improve the compaction practices. Heavy compaction equipment must be given the right of way without undue interfering with compaction operations. The use of high-speed compaction equipment may be necessary to avoid conflicts between hauling and compacting equipment.

5-3 GROUND MODIFICATION

The process of getting natural soils or rock to perform satisfactorily in a given application is commonly called ground modification. Ground modification includes mechanical methods, such as compaction, reinforcement, and reinforcement, and chemical methods. Some methods are suitable for a wide range of soils, while others are specialized for specific soil types. Table 5-4 lists some of the methods and their applications.

Mechanical Methods

As you saw, the compaction process increases the density of the soil. Compaction is a mechanical method of ground modification. Additional mechanical stabilization methods include dynamic compaction, vibroflotation, and dynamic compaction.

Table 5-4 Soil stabilization methods

Mechanical	Hydraulic	Reinforcement	Physicochemical
Compaction	Drainage	Geotextiles	Admixtures
Densification	Freezing	Inclusions	Freezing
Vibrocompaction	Electroosmosis	Nailing	Grouting
		Soil nailing	Heating
		Geosynthetics	

Dynamic compaction, or deep compaction, involves dropping a heavy weight from a height and can be used for general surface or subsurface soil densification. Typically, weights of 5 to 40 tons (5–36 Mg) are used with a drop height of 50 to 100 ft (15–30 m), producing densification to depths of up to 30 ft (9 m). The amount of energy imparted to the soil is on the order of 7 to 25 ton-m/m^2 (70–250 kJ/m^2).

Vibratory compaction, also called vibrocompaction and vibroflotation, is the process of densifying granular soil deposits by inserting a vibratory probe into the soil. After the probe is jetted to a depth slightly greater than the vibrator is turned on and the device is slowly withdrawn while the void space created by granular material is filled from the surface as the soil around the probe densifies and subsides. The process is repeated in a pattern such that the ground is densified in several lifts and horizontally in a grid. The process is most effective in granular soils containing less than 15% fines and effective in fine sands and silts up to a maximum of 20% fines. In such cases, vibratory compaction is usually less expensive than excavating and replacing poor soil. However, the process can also be used in conjunction with other methods to increase performance. A related technique is stone columns, which achieve soil improvement through densification, drainage improvement, or both, using compacted stone columns. The concept is similar to vibratory compaction in that the fill added to the probe is withdrawn in lifts and compacted to form a column. The resulting stone column is used to increase the density and strength of the surrounding soil. Stone column densities of 30 to 40 pcf (9–14 kN/m^3) are typically achieved.

Hydraulic Methods

Saturated cohesionless soils, in particular, fail to develop strength when the soil pore water cannot be dissipated under applied loads. Water can be removed from the soil pores by gravity (see Section 5-11). For example, a pavement subbase, weighing down on a soft soil, has been used to dewatering cohesive soils. However, this is very long term, sometimes impractical, unless a granular soil drainage layer is provided. Nonetheless, dewatering is a viable technique and is discussed further in the section on Ancillary Methods. Another method is to apply a flow of water to speed up the drainage process. This is called electroosmosis and is discussed in Section 5-7.

Reinforcement Methods

[illegible] reinforcement techniques, soil utilizing [illegible] reinforcement as described in Section [illegible]. Some [illegible] called "[illegible]" [illegible] is a technique for stabilizing [illegible] soil [illegible] mixed [illegible] previously, is similar to [illegible] compaction.

Physicochemical Methods

With [illegible] techniques [illegible] described [illegible] compaction [illegible] soil stabilization [illegible] improvement of the engineering properties of soil by use of [illegible] chemicals.

[illegible] physicochemical [illegible] used to stabilize [illegible] soil [illegible] and cement, lime and asphalt. Table [illegible] lists [illegible] materials [illegible] soil, typical [illegible] and curing [illegible]. Some [illegible] are described below. [illegible] been found [illegible] will usually increase the strength of a soil [illegible] 0.5 to 1.5 [illegible] strength of [illegible] soil [illegible].

Granular Admixtures

Soil blending with granular material is [illegible] product [illegible], without excessive [illegible], which is [illegible] compaction.

Table 5.5 Common stabilizing materials

Material	Size	Quantity (% by weight)	Curing time
Granular admixtures	Various	Various	None
Portland cement	Gravel	[illegible]	24 h
	Sand	[illegible]	
	Silt/clay soil	[illegible]	
	Clay	[illegible]	
Lime			
Hydrated	Clayey gravel	[illegible]	[illegible] days
	Silty clay	[illegible]	
	Clay	[illegible]	
Quicklime	Clayey gravel	[illegible]	[illegible]
	Silty clay	[illegible]	
	Clay	[illegible]	
Asphalt	Sand	[illegible]	
	Silty or clayey sand	[illegible]	8 days

[illegible]

Portland Cement

[illegible]

Lime

[illegible]

Asphalt

[illegible]

- Surface grading. [illegible]
- Roadbed [illegible]
- [illegible]

5-4 GRADING AND FINISHING

[illegible]

Figure 5.13 Modern motor grader. (Courtesy of Jim Shaw Construction & Forestry Company.)

equipment most widely used for finishing is the motor grader (Figure 5-13). Grade stakes and laser systems are frequently used on major highway and other projects because finishing a road is a precise function of the motor grader.

Hydraulic construction techniques are using ever higher and higher pressures to achieve a stable layer is called balance. Following the process of bulking and balance layer is actual grade. Typical tolerances range for final medium grades are [illegible] per 100 ft (1.25 cm/30 m) for single lane and [illegible] per 100 ft (2.5 cm/30 m) for two lane. Typical roadway cross-sections are illustrated in Figure [illegible].

Finishing is a key item in a construction contract because the quality of contractors involved is difficult to measure. As a result, the portion of finishing processes by hand is [illegible]. However, studies have shown that [illegible] performance and economics of finishing processes compare favorably to [illegible].

Motor Grader

The motor grader is one of the most versatile pieces of earthmoving equipment. It can be used for light stripping, grading, finishing, ditching, berm shaping, shaping back fill, and scarifying. It is also capable of [illegible] spreading soil and aggregate [illegible]

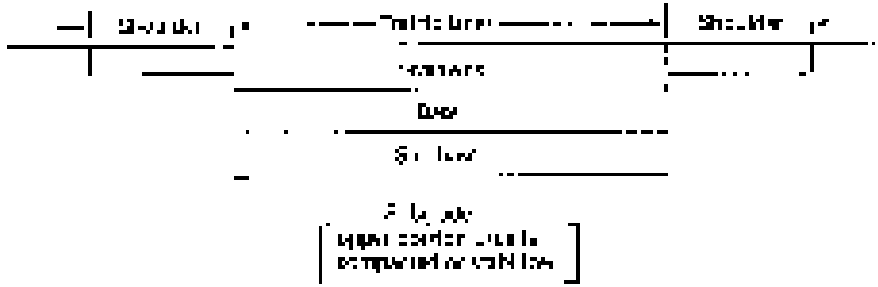

Figure 5-14 Typical roadway components

greater building [illegible] as well as in heavy and highway construction. It is frequently used for the maintenance of highways and roads.

[illegible] of [illegible] grader is recommended [illegible] equipped with removable cutting edges and blades for [illegible]. The wide range of powered blade positions is illustrated in Figure 5-15. The blade can be changed in a manner similar to dozer blades. Tilting the blade forward results in a cutting action of the cutting edge material and is used for trenching and for [illegible] materials, stirring the soil that is loosened in preparation for [illegible] but may also [illegible] the tip of the blade. Blade cutting edges are available in flat, curved, or serrated styles. Flat edges provide the least value, curved edges are recommended for cutting hard material, and serrated edges are used for breaking up packed gravel, frozen soil, and ice.

Some graders are [illegible] articulated frames that increase greater maneuverability. The three possible modes of operation for an articulated grader are [illegible] in Figure 5-16. The machine can operate in the conventional manner [illegible] in the straight mode (Figure 5-16a). The articulation mode (Figure 5-16b) allows the machine to [illegible] around curves. One of the [illegible] mode (Figure 5-16c) permits the rear driving wheels to be offset so that they remain on the ground while the machine [illegible] backslope, or [illegible]. The front wheels of both conventional and articulated graders may be turned [illegible] to side, which [illegible] from the cutting edge [illegible] soil pressure against the cutting blade. [illegible] may also be used to assist in turning the grader.

Graders are available with automatic blade control systems that can [illegible] precise [illegible]. Such graders [illegible] system that focuses on controlling [illegible] so that automatically raises or lowers the blade as required to achieve the desired grade. [illegible] used to [illegible] hard surfaces, finish grading and to break up [illegible] and lower soil. Their operation is similar to that of the [illegible] described in Chapter 6. However, [illegible] material for heavy duty use as compared [illegible] available in graders [illegible] is limited by the weight and power of the grader. Grader [illegible] are usually mounted on the rear of the machine.

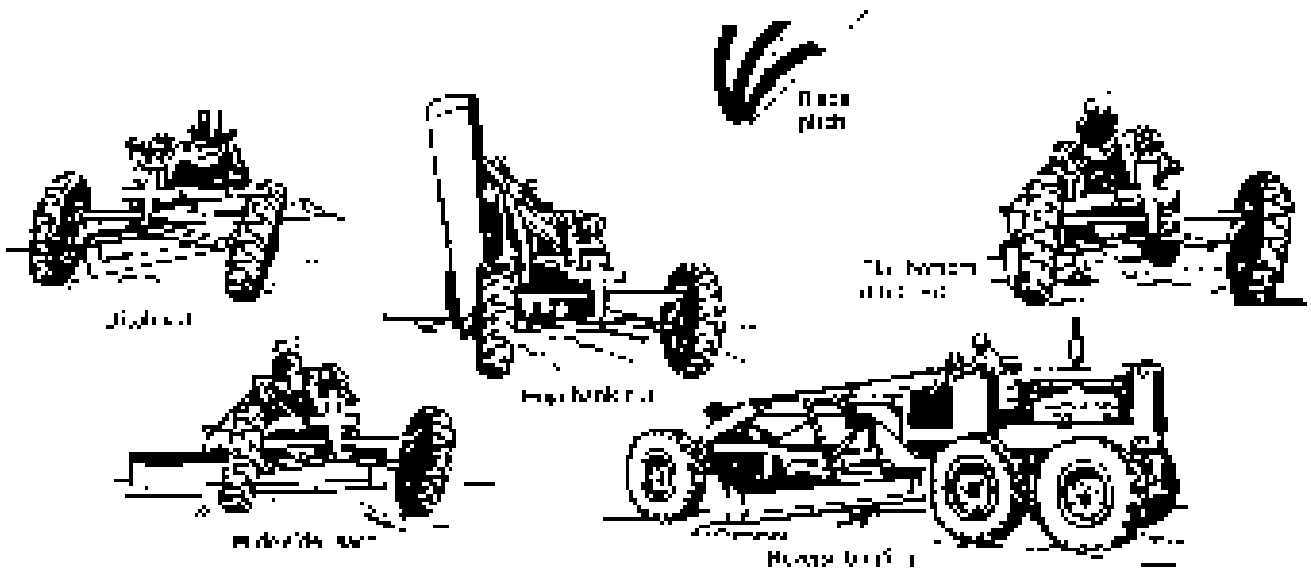

Figure 5-13 Blade positions for the motor grader (U.S. Department of the Army)

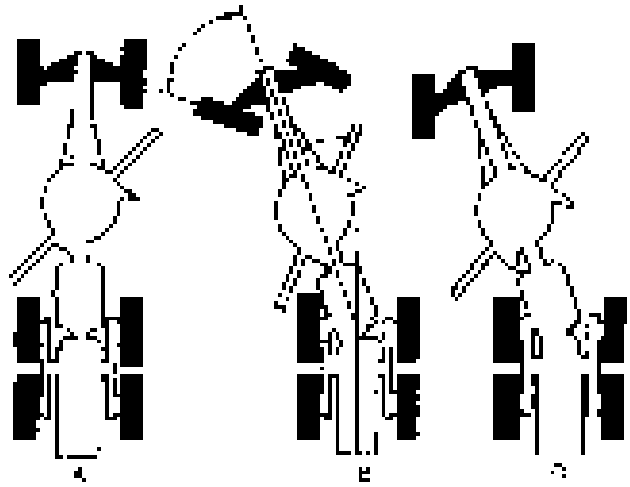

Figure 5-16 Articulated grader [illegible]

Grade Excavators and Trimmers

Grade excavators are heavy machines that are used to build roadways, [illegible] highways, and [illegible] and cut accurately [illegible]. Most of these machines also [illegible] [illegible] capacity of scarifying and removing soil [illegible] [illegible] Trimmers are relatively inexpensive machines equipped with [illegible] belt conveyors [illegible] [illegible] excavated material [illegible] [illegible] [illegible] inside the excavated area. The [illegible] machine shown in Figure 5-17 [illegible] [illegible] [illegible]

Figure 5–17 Large [illegible] (Courtesy of [illegible] Headquarters)

Table 5–6 General power operations speeds

Operation	Speed mph	Speed km/h
Bank sloping	2.5	1.0
Hitching	2.5–[illegible]	[illegible]
Filling	1.0–8.0	0.5–14.5
Grading and maintenance	4.0–8.0	0.1–3.7
Mixing	0.0–20.0	[illegible]
Snow removal	19.0–20.0	[illegible]
Spreading	[illegible]	0.7–14.5

EXAMPLE 5–1

[illegible]

[illegible] If the job labor efficiency is 0.8%, how many man hours will be required for the job?

SOLUTION

$$\text{Time (h)} = \left[\frac{(2 \times 12)}{(0.4)} + \frac{(2 \times 12)}{(0.8)} + \frac{(2 \times 15)}{(0.8)}\right] \times \frac{1}{0.85} = 23.1 \text{ h} \qquad 1.29 \times 10$$

$$\left[\frac{(2 \times 24.1)}{(0.4)} + \frac{(2 \times 24.1)}{0.8} + \frac{(2 \times 28.8)}{(0.8)}\right] \times \frac{1}{0.80} = 59 \text{ [illegible]}$$

Job Management

Careful job planning, the use of skilled operatives, and supervision are essential if costs are to be minimized under production efficiency. Use of maximum possible number of unskilled persons to complete the work. Limited space may prevent use of working platforms, so that [illegible] for [illegible] work up to [illegible] feet. Gradings are [illegible] for larger [illegible] which are [illegible] difficult or impossible. Second grades may work [illegible] if sufficient working [illegible]. This technique is especially useful for grading large areas.

PROBLEMS

1. What type of construction would you expect to be most suitable for compaction of clean sand?
2. Estimate the production of a compact of [illegible] yards per hour of a self-propelled tamping foot roller under the following conditions: average speed = 5 mph (8.0 km/h), compacted lift thickness = 6 in (15.2 cm), effective roller width = 10 ft (4.26 m), job efficiency = 0.75, and number of passes = 8.
3. Lists the core principal methods for achieving ground modification and stabilization. Provide a brief description of each.
4. a. What is compaction?
   b. What is the typical lift thickness for an excavator or manual compaction method?
   c. State the minimum page [illegible] that should be used when compacting with an excavator or manual compaction method.
5. List the types of cement mixes that are suitable for compaction in [illegible] uses.
6. A [illegible] contractor has [illegible] in a fine [illegible] of 2500. The [illegible] of the [illegible] and back of the [illegible] [illegible] the [illegible] [illegible] the [illegible] [illegible] [illegible]

[illegible] percent 95% of standard AASHTO density is to be achieved. The Mississippi roller is not "breaking down" and the compactors are [illegible] and [illegible] [illegible] Why is it so difficult to achieve the required density? What would you suggest [illegible] improve the compaction process?

7. [illegible] 150 mm of gravel road requires [illegible] and hauling. You assume the [illegible] will require two passes of 5 km/h [illegible] and one pass of 5 km/h [illegible] second lift. The [illegible] will be required for the work if the job efficiency is 0.83?

8. Why might the [illegible] field moisture content [illegible]?

9. The data in the accompanying table resulted from performing Modified Proctor Tests [illegible] the Gradation [illegible] Laboratory [illegible] moisture content. What minimum field density must be achieved on this job to ensure that at least [illegible] percent 95% [illegible] AASHTO density?

Dry Density		
lb/cu ft	g/cm³	Moisture Content (%)
1[illegible]	1.740	10
1[illegible]2	1.797	12
1[illegible]	1.[illegible]	14
1[illegible]	1.842	16
1[illegible]	1.792	18
105	1.680	20

10. Write a computer program to calculate the [illegible] required to perform a [illegible] operation. Input data should include [illegible] and [illegible] speed and [illegible]. Solve Problem 7 using your computer program.

REFERENCES

1. Corporation [illegible] Bulletin [illegible] Milwaukee, WI.
2. [illegible] Corporation, Peoria, IL.
3. [illegible] Corporation, [illegible] Pa.
4. [illegible] Principles [illegible] New York [illegible] 1947.
5. [illegible] Company [illegible] Upper Saddle River, NJ [illegible] 2000.
6. [illegible] D. J. [illegible] Bureau of [illegible] Washington, DC [illegible] 1950.
7. [illegible] B. E. [illegible] Report No. [illegible] U.S. [illegible] Washington, DC, 1966.

6 Rock Excavation

6–1 INTRODUCTION

Rock Characteristics

Rocks may be classified as igneous, sedimentary, or metamorphic according to their origin. Igneous rocks are formed when molten material cools. Depending on its origin, it is quite heterogeneous and is the most difficult type of rock to excavate. Sedimentary rocks are formed when material from water or air is deposited. It is highly stratified and has many planes of weakness. Thus it is the most easily excavated type of rock. Examples include sandstone, shale, and limestone. Metamorphic rocks originated as igneous or sedimentary rocks but have been changed by heat, pressure, or chemical action into a different type of rock. Metamorphic rocks are more difficult to excavate than igneous rocks and sedimentary rocks in a manner similar to sedimentary rocks. Examples of metamorphic rock include slate, marble, and schist.

The difficulty involved in excavating rock depends on a number of factors including the type of rock. Some of these factors include the presence of fractures and other planes of weakness, the direction of machining that has occurred, the predominant grain size, whether the rock has any other structure, its toughness, and its hardness.

Rock Investigation

Before beginning a rock excavation project, it is important to know the type of rock, and the rock that can be excavated by a single duty [illegible] machine is usually determined by trying to other mechanical methods. For [illegible], additional investigation is required to verify the lack of [illegible] to [illegible] and [illegible]. The [illegible] rock [illegible] investigation taken from [illegible] [illegible] [illegible] and [illegible] [illegible] [illegible]

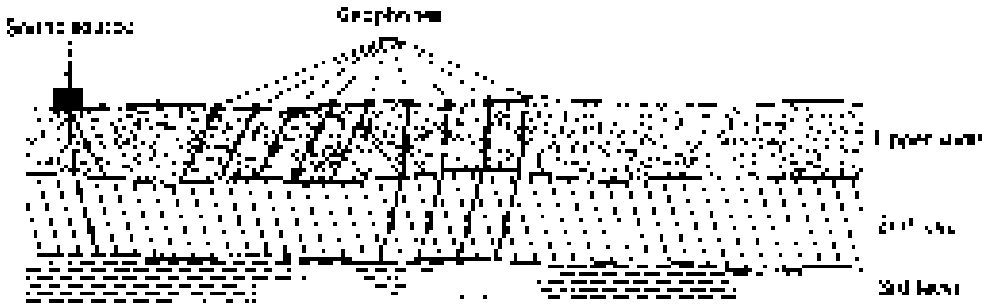

Figure 6-8 Schematic representation of seismic refraction test.

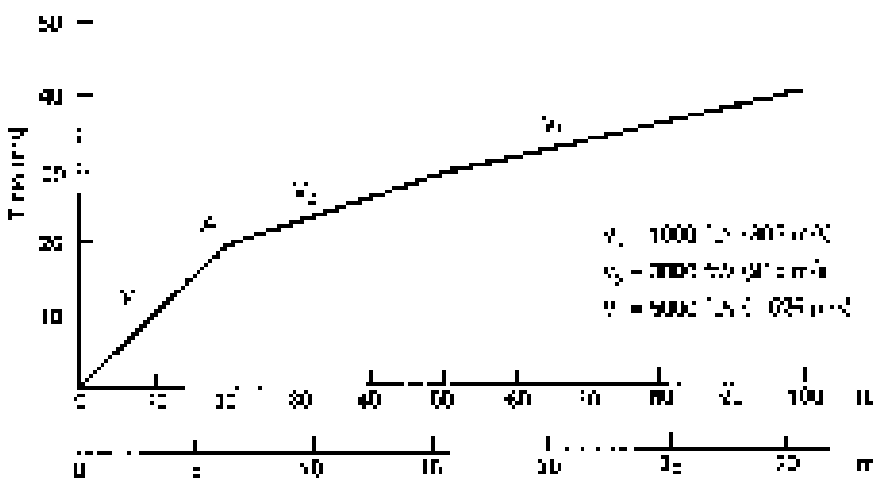

Figure 6-9 Typical seismic refraction test data.

Figure 6-9 is a typical seismograph plotted for determination of the sound velocity, measuring the velocity at which sound travels through the rock.

In performing a seismic refraction test, a small seismic shock is produced by a sledge hammer or explosion at the source as illustrated in Figure 6-8. The time required for the sound wave to travel from the source to each geophone is recorded and plotted against the distance from the source, as shown in Figure 6-9. In this particular case, the rock site has been found to have three layers with the corresponding sound velocities. The rock site has been found to have three layers with the corresponding sound velocities. The rock site has been found to have three layers with the corresponding sound velocities. The

the thickness of each layers. Equation (6-1) may be used to determine the thickness of the upper layer, [illegible] velocity increases with depth, [illegible] that is when the velocity in the top layer is less than the velocity in the second layer which is the usual case in the field.

$$h_1 = \frac{x_1}{2}\left[\frac{v_2 - v_1}{v_2 + v_1}\right]^{1/2} \qquad (6\text{-}1)$$

where h_1 = thickness of the upper layer [illegible]

x_1 = distance between sound source and receiver at the point of intersection of lines [illegible] graph [illegible] Figure 2.

v_1 = velocity in upper layer (ft/sec)

v_2 = velocity in second layer (ft/sec)

EXAMPLE 6-1

Find the velocity, type velocity, and depth of the upper layer based on the following refraction seismograph data:

Distance from Sound Source to Geophone		
ft	m	Time (ms)
10	3.05	5
20	6.10	10
30	9.15	15
40	12.20	20
50	15.25	22
60	18.30	24
70	21.35	26
80	24.40	28

SOLUTION

Plot [illegible] distance versus time as shown in Figure 6-3

$$v_1 = \frac{\Delta x_1 - 0}{\Delta t_1 - 0} = 2000\ \text{ft/s}$$

$$\left[= \frac{10\ \text{m}}{0.005\ \text{s} - 0} = 610\ \text{m/s}\right]$$

$$v_2 = \frac{\Delta x_2 - x_1}{\Delta t_2 - t_1} = \frac{80 - 10}{0.028 - 0.005} = 3043\ \text{ft/s}$$

$$\left[= \frac{24\ \text{m} - 3.05\ \text{m}}{0.024\ \text{s} - 0.005\ \text{s}} = 1110\ \text{m/s}\right]$$

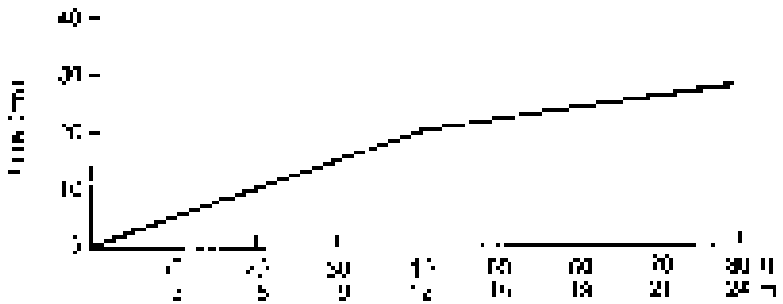

Figure 6–1 Graph of [illegible] test data. Example 6–1

$$[illegible]$$

$$[illegible]$$

Rock-Handling Systems

[illegible] rock handling must be considered in five processes: loading, hauling, hoisting, and conveying. The materials equipment for these components are reviewed in Chapter 5. [illegible] discussion of rock handling systems will be limited to the phases of loading, hauling, and hoisting. The principal methods and equipment available for accomplishing each of these processes are listed in Table 6–1.

The traditional method of excavating rock in a close drilling boreholes in the rock, loading the broken rock into explosives, detonating the explosives, hoisting the fractured rock [illegible] and dumping the rock into a crusher or conveyor. Some alternate methods include the use of [illegible] equipment [illegible] such as the use of wheel

Table 6–1 Principal Rock Handling Systems

Operation	Equipment and Processes
Loading	[illegible]
	Rip
[illegible]	[illegible]
	[illegible]
[illegible]	[illegible]
	[illegible]
[illegible]	[illegible]

Figure 6–4 Large tunneling machine (Courtesy of the Robbins Company)

[illegible]

Tunneling

Tunneling in rock is a space-saving method of rock excavation that has traditionally been a complicated by drilling and blasting. Recently, several tunneling machines have been developed which can drill and excavate a tunnel in one operation. The machines have been used in [illegible] tunneling projects. The tunneling machine shown in Figure 6–4 weighs 230 tons (209 t), produces a tunnel 15 ft (4.6 m) in diameter, and drills a 19 ft (5.8 m) in diameter hole.

Some of the auxiliary operations in tunneling include systems for probes, and machine machines. A probe is a [illegible] equipped with [illegible] drill and [illegible] the bit [illegible] The system [illegible] in Figure [illegible] self propelled [illegible] equipped with a number of [illegible] drilling holes [illegible] the [illegible] machine [illegible] drilling holes [illegible] the [illegible] machine [illegible] [illegible] machine [illegible] [illegible]

Figure 6-5 Hydraulic jumbo (Courtesy of Atlas Copco)

6–2 DRILLING

Drilling Equipment

Common types of drilling equipment include percussion drills, rotary drills, and rotary percussion drills, as listed in Table 6-1. Percussion drills penetrate rock by impact action alone. While the life of these drills is shorter when drilling the hard rock portion of the tunnel, under ideal conditions rotation takes place on the impact. This is called percussive drilling or percussive drilling. Common types of percussion drills include wagon drills, jumbo drills, which are mounted on a frame on wheels, and wheel rock drills. Wagon drills are relatively large units mounted on crawler tracks for mobility. They have been used extensively for construction and quarry drilling but are larger and heavier than jumbo drills. Those drills are now being replaced by smaller units equipped with hydraulic equipment and automatically powered by compressed air or electricity. In 2000.

Rotary drills (Figure 6-2) are the most suitable for use in soft rock. Rotary percussion drills combine rotary and percussion drilling, using no percussion unless necessary. Rotation takes place per revolution of the drill. Rotary drills (Figure 6-3) are the

Table 6-2 Typical characteristics of rock drilling equipment

Type of Drill	Maximum Drill Diameter		Maximum Depth	
	ft	cm	ft	m
Percussion				
Jackhammer	2.5	6.4	50	0.1
Drifter	4.5	11.4	15	4.6
Wagon drill	6.0	15.2	50	15.3
Horizontal	6.0	15.2	30	9.3
Rotary roll	9	15	1000	305
Rotary percussion	6.0	15.2	100	45

a percussion drilling device not more than eight above the rock, but at the bottom of the hole. Downhole drills have several advantages over surface percussion drills. Drill cuttings are flushed out of the hole by compressed air, so no separate compressor is required. In addition, the high-pressure drill exhaust can be used for other purposes, such as cooling the bit and removing cuttings. There is less loss of energy between the compressor and the bit. Although downhole drills are available for rock drills, they are usually mounted on rotary drilling equipment. Since rotary drills have diameters of less than 6 in (15 cm), they are used for blasting holes in the down-hole drill only in conjunction with a rotary drill. Rotary percussion drills are a combination of percussion and rotary drilling. A percussion drill is a percussion drill with a rotary drill. A percussion drill is a percussion drill with a rotary percussion drill.

Drilling rate of a percussion drill depends on rock hardness, drill type and size, and the type of drill bit used. Table 6-3 lists the approximate drilling rate for various drilling equipment.

Increased air pressure in the drill will result in increased drill penetration (percussion drills) as shown in Figure 6-9. However, for safety purposes, the drill should not exceed the maximum drilling pressure specified by the manufacturer. In addition, as pressure increases, the cost will also increase, as the life of the equipment, as well as increases in maintenance and repair costs. Thus, a decision should be made to determine the drilling pressure that results in minimum cost per unit of rock removed.

In addition to preliminary operations, such as removal of vegetation, removal of topsoil, or removal of overburden, drilling operations, and the removal of large boulders and other obstacles, the use of the rotary drill, rotary percussion drills, and percussion drills, as well as other equipment, have been used to drill holes of 6 ft (2 m) or more in diameter. Drilling operations

Figure 6.6 Hydraulic back drill. (Courtesy of Alaska Tanker)

Figure 6-7 Rotary-percussion drill. (Courtesy of Ingersoll-Rand Company)

Figure 6-8 Downhole drill mounted on a rotary drill. (Courtesy of Ingersoll-Rand Company)

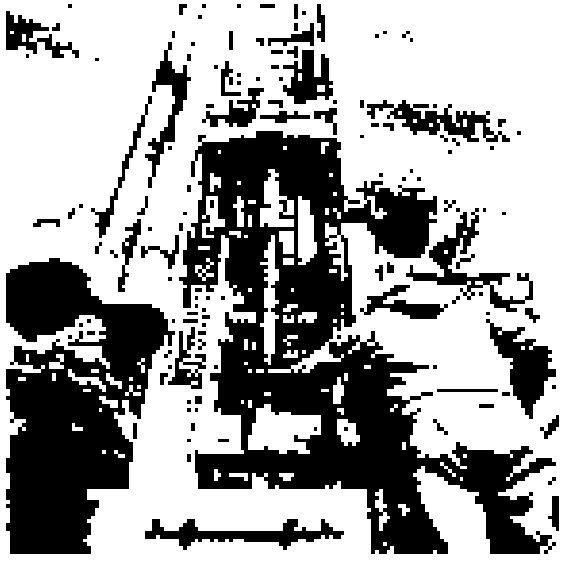

Table 6-3 Typical drilling rates (cubic cm/h)

Bit Size		Hand Drill		Wagon Drill		Crawler Drill		Hydraulic Drill	
in.	cm	ft/h	m/h	ft/h	m/h	ft/h	m/h	ft/h	m/h
[illegible]	4.1	14–24	4.2–7.2						
[illegible]	4.4	11–2[illegible]	3.4–6.4						
2	5.1	10–13	3.[illegible]–6.2	8[illegible]–[illegible]	7.[illegible]–[illegible]	[illegible]–[illegible]	[illegible]–[illegible]	[illegible]–[illegible]	[illegible]–[illegible]
2½	6.4			19–48	5.8–14.6	39–102	21.7–54.6	[illegible]–[illegible]	[illegible]–[illegible]
3	7.6			[illegible]–[illegible]	[illegible]–[illegible]	[illegible]–[illegible]	[illegible]–[illegible]	[illegible]–[illegible]	[illegible]–[illegible]
[illegible]	10.2			[illegible]–[illegible]	[illegible]–[illegible]	[illegible]–[illegible]	[illegible]–[illegible]	60–120	24.4–36.6
8	15.2					[illegible]–[illegible]	[illegible]–[illegible]	[illegible]–[illegible]	[illegible]–[illegible]

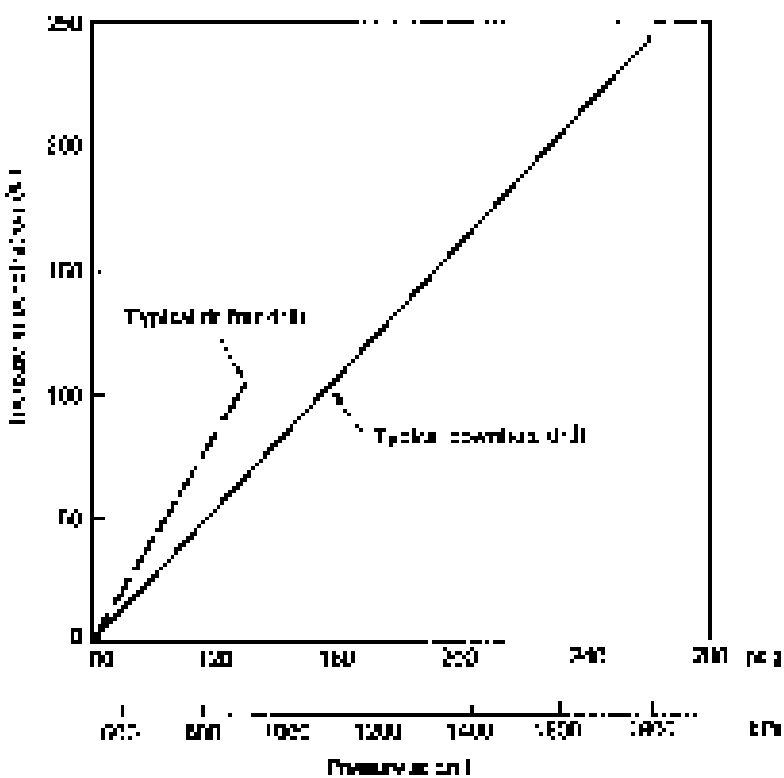

Figure 6-8 Drill penetration versus air pressure.

Figure 6–10 Major types of rock drill bits

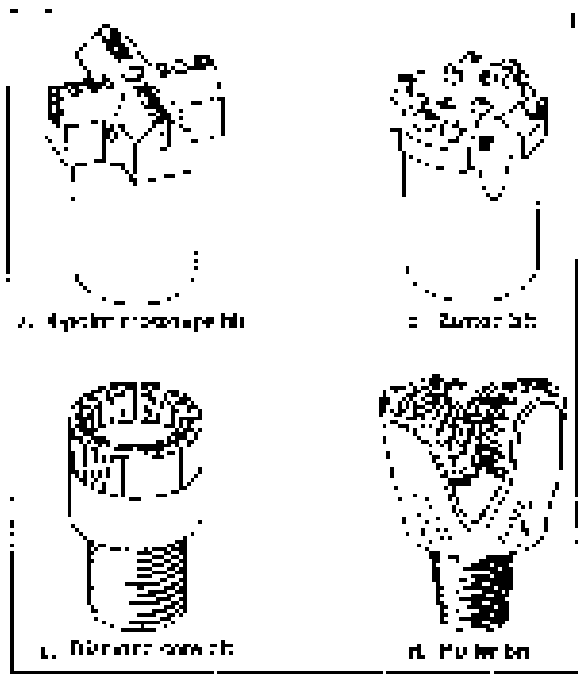

Rock drills have multiple cutting points and be composed of [illegible]. [illegible] hybrid [illegible] Hybrid [illegible] and [illegible] [illegible] Roller cones also produce [illegible] drill bits.

Drill Bits and Steel

Many types of rock drill bits are illustrated in Figure 6–10. The original [illegible] drill bits were [illegible] type [illegible] Later, X-type bits and bits [illegible] differed [illegible] that the points of the X-type bits [illegible] 90° angle [illegible] the shape of the X. X-type bits are [illegible] drill [illegible] than do cross-type bits. Both types of bits are available with [illegible] cutting edges. Since [illegible] bits [illegible] per [illegible] bit [illegible] X-type bits are [illegible] preferred [illegible] X-type bits are [illegible] likely to [illegible] bits. Button bits do not [illegible] sharpening. Bits [illegible] X-type [illegible] X-type [illegible] other special designs for the cutting edges.

Common types of bits for [illegible] drill [illegible] are [illegible] Diamond [illegible] are [illegible] Diamond [illegible] small [illegible] the [illegible] rotary [illegible] to achieve rapid rock [illegible] Diamond bits are also [illegible]

[illegible] to drill conventional holes. The shaped charge drilling bit is similar to the [illegible] bit. However, [illegible] the hole [illegible] the explosive [illegible] the drilling agent. The jet [illegible] of the shot drill bit is stopped to assure [illegible] the rock [illegible] the [illegible] drilling [illegible] normally [illegible] permitting the rock is the drill bit [illegible]

The [illegible] drill [illegible] in [illegible] in [illegible] in

Figure 6–11 Principal drilling patterns.

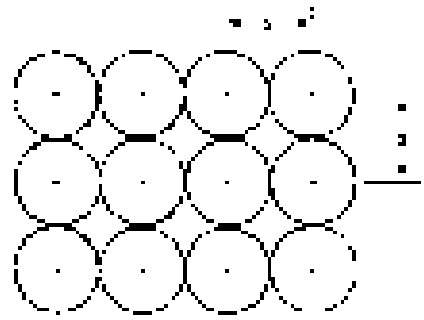

a. Rectangular pattern

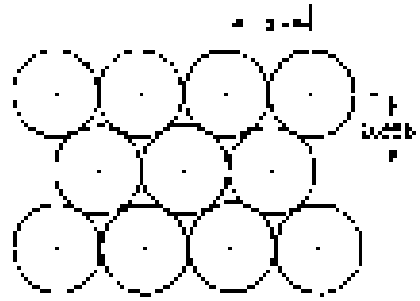

b. Staggered pattern

$$\text{Volume/foot of hole} = \frac{S^2 \times d}{27} \qquad (6\text{–}24)$$

$$\text{Volume/unit length} = S^2 \times d \qquad (6\text{–}25)$$

where S = hole spacing (feet)
d = drill hole depth (feet)

Effective hole depth should be determined for drill holes. Measurements should be taken from the top of the projected 90% of original hole depth.

The total predicted cut hole may be divided by the original hole depth to yield the volume per unit of hole drilled.

$$\text{Volume/foot of hole} = \frac{\text{Volume per hole (cu yd)}}{\text{Actual hole depth (ft)}} \qquad (6\text{–}26)$$

$$\text{Volume/unit of hole} = \frac{\text{Volume per hole (cu yd)}}{\text{Actual hole depth (in.)}} \qquad (6\text{–}27)$$

The amount of blasting required to produce a given volume of broken rock and the fragmentation obtained is the subject of the remainder of this chapter.

EXAMPLE 6–2

Trial blasting indicates that a blast hole pattern of 6 m × 7.5 m (20 ft × 25 ft) with a spacing of 9 m (30 ft) by a burden of 7.5 m (25 ft) will produce a satisfactory rock breakage for a particular explosive loading. The effective rock density in the blasting zone is 2.6 t/m³ (162 lb/ft³). Determine the rock volume produced per hole (in cubic meters).

SOLUTION

$$\text{Volume/hole} = \frac{\text{Spacing} \times \text{Burden} \times \text{Bench height}}{\text{Stiffness factor}} \quad \text{(Eq. 6–24)}$$

$$= \frac{(9.0\ \text{m})(7.5\ \text{m})(10.0\ \text{m})}{1.0} \quad \text{(Eq. 6–24)}$$

$$\text{Volume/unit depth} = \frac{\text{Volume}}{\text{Bench height}} = 675\ \text{m}^3/\text{m of depth} \quad \text{(Eq. 6–25)}$$

$$\left[= \frac{675\ \text{m}^3}{3.3\ \text{ft/m}} = 204\ \text{yd}^3/\text{ft}\right] \quad \text{(Eq. 6–25)}$$

G–3 BLASTING

Explosives

The principal explosives used for rock excavation include dynamite, nitroglycerine, ammonium nitrate–fuel oil (ANFO), and slurries. For construction use, dynamite is largely being replaced by ammonium nitrate, ANFO, and slurries. Nitroglycerine explosives are seldom used because it is unstable that dynamite, ammonium nitrate and ANFO are the most popular of the explosives used. ANFO is an inexpensive, easy to handle, because it is not sensitive to shock, and is simply poured into the hole. However, ammonium nitrate–fuel oil slurries are more sensitive and they require an auxiliary explosive primer for detonation. Slurries are mixtures of gelled explosives and water. These mixtures contain powdered metals (aluminum, ferrosilicon) to increase the energy. Slurries are charged hydraulically and are most expensive. Unlike the ammonium nitrate explosives, water resistance and density are the principal advantages over ammonium nitrate and ANFO. Slurries are available as liquids or packaged in plastic bags. Slurries are sensitive to primer detonation.

Dynamites have been the most popular explosive in the past, but they are being replaced by ANFO. Blasting caps are commonly used for small or medium-sized blasts. Electric blasting caps are commonly used for large, complex or medium-sized blasts.

[illegible] delay [illegible] from a few milliseconds [illegible] [illegible] [illegible]

Table 8–5 Representative current measurements for firing electric blasting caps

	Minimum Current (A)				
	Normal		Leakage		
Typical Circuit	[illegible]	[illegible]	[illegible]	[illegible]	Maximum Current
Single cap	0.5	0.5	—	—	—
Series	1.0	2.0	0.0	0.0	
Parallel	[illegible]	[illegible]	—	—	[illegible]
Parallel-series	[illegible]	[illegible]	[illegible]	[illegible]	—

[illegible] electric blasting caps and blasting machines. Blasting caps have an overall dependence on capacitive [illegible] ICD units designed especially for firing [illegible] circuits.

When designing a blasting circuit, it is necessary to determine the total [illegible] resistance and the current requirements [illegible]. Total current [illegible] same current flows through all elements of the circuit. In a parallel circuit, the current in the main [illegible] is the sum of the currents in all the parallel branches (Ohm's law). Consequently, [illegible] power [illegible] current [illegible] voltage [illegible] current [illegible] resistance [illegible] caps:

$$\text{Voltage (volts)} = \text{Current (amperes)} \times \text{Resistance (ohms)} \qquad (8\text{–}4)$$

or

$$E = IR$$

Conversely, if the power source voltage and circuit resistance are known, the current [illegible] can be used to determine whether sufficient current will be produced to fire the cap. Best known and common requirements for firing electric blasting caps are given in Table 8–5. Note that a maximum current per cap is specified to prevent premature [illegible] during handling of the explosives. Injury is prevented in case of high current [illegible] result in [illegible] premature firing of the cap [illegible] and therefore must be avoided.

If the same number and type of caps are used in each series, the resistance of the cap circuit may be calculated as follows:

$$R = \frac{\text{Number of caps per series} \times \text{Resistance per cap}}{\text{Number of parallel branches}} \qquad (8\text{–}5)$$

Representative values of individual cap resistances are presented in Table 8–6. Note that cap resistance depends on the length of cap lead wires used. Caps are normally available with lengths ranging from [illegible] ft (1.2 m–[illegible] m). Caps with longer lead wires are available on special order. Blasting caps with lengths greater than [illegible] ft (1.2 m) are seldom used. Total resistance between the hole to the surface and the blasting machine depends on the length of the lead wire. Minimum lead wire length may be calculated on a basis of allowable voltage drop, conductor size, and temperature. Resistance may be calculated using the resistance factors of Table 8–7. The effective length is determined by multiplying the actual length by the factor taken from the Table and adding

Table 6-6 [illegible]

Lagwire Length		
ft	m	Nominal Resistance (Ω)
4	1.2	1.5
5	1.8	1.0
6	[illegible]	1.7
10	[illegible]	1.0
12	[illegible]	1.6
16	[illegible]	1.9
20	[illegible]	[illegible]
[illegible]	[illegible]	[illegible]
25	[illegible]	[illegible]
30	[illegible]	[illegible]
40	[illegible]	[illegible]
50	[illegible]	[illegible]
60	[illegible]	[illegible]
80	[illegible]	[illegible]
100	[illegible]	[illegible]

Table 6-7 [illegible]

American Wire Gauge Number	Ohms/1000 ft (305 m)
[illegible]	[illegible]
5	[illegible]
6	[illegible]
[illegible]	[illegible]
[illegible]	[illegible]
9	[illegible]
11	[illegible]
20	[illegible]

[illegible] the wire [illegible] the end of the [illegible] and [illegible] the [illegible] and [illegible] the [illegible] and end of the [illegible] wire.

The steps in performing [illegible] are listed below. This [illegible] illustrated by Example [illegible]:

1. [illegible] resistance of the [illegible].
2. Determine [illegible] of the [illegible] and [illegible].
3. Determine [illegible] the [illegible].

4. Calculate the total circuit resistance and the open-circuit voltage, including shot and firing hole resistances.
5. Determine the total current and the current required to initiate a detonator, I_{det} (see Table 6.5).
6. Solve Equation 6.4 for the open-circuit voltage. If the power source voltage is known, solve Equation 6.4 for the circuit current and compare it to the value in step 5.

EXAMPLE 6.3

Analyze the top circuit shown in Figure 6.[illegible] to determine minimum voltage requirements. Assume the power source is nominal voltage necessary for the blasters. Cable is equipped with 20 to 0.12 m. leg wires. Assume normal firing conditions.

Solution

$$R_{det} = \frac{5 \times 2.22}{1} = 11.10\ \Omega \quad \text{(Eq. 6-5)}$$

Effective length of the circuit: $(4 \quad 8' \quad 6' \quad 50) = 80\ \text{ft}\ (24.4\ \text{m})$

$$R_{wire} = \frac{80 \times 0.08}{1000} = 0.0064\ \Omega$$

$$R_{shot\ wire} = \frac{2 \times 1000 \times 0.29}{1000} = 0.58\ \Omega$$

$$R_{tot} = 2.22 + 0.0064 + 0.58 = 13.86\ \Omega$$

Minimum current per detonator = 1.5 A (Table 6.5)

Minimum current per circuit = 1.5 A

Recommended minimum firing line = 5 × 1.5 = 7.5 A

Minimum voltage required per circuit = 1.5 × 13.86 = 20.79 V (Eq. 6-4)

The current range and the recommended minimum value (approximately 5 times the value required to initiate the detonators) are adequate to match wet ground. Actual leakage conditions [illegible] the current to the blasters. Assuming the resistance of the cable and the electrical ground [illegible] wet [illegible] the current leakage [illegible] the current leakage indicates values of Table 6.5.

Nonelectric Blasting Circuits

There are many [illegible] in use. Since a blasting system is a chain, the reliability of nonelectric explosives with the precise timing and flexibility of the electric blasting system. Several nonelectric systems have been [illegible] in recent years. Although [illegible] of these systems are [illegible] of these. All [illegible] of the [illegible] Nonelectric [illegible]. With all of these systems, [illegible] firing [illegible] back in the blasting circuit.

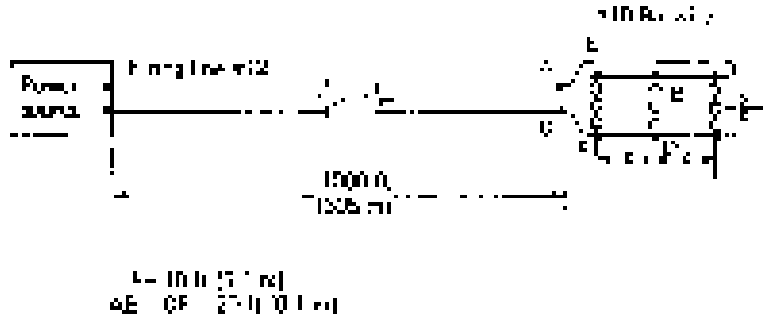

Figure 6-14 Circuit for Experiment 6-1.

[illegible] conventional type of [illegible] detonating cord [illegible] conventional [illegible] firing [illegible] firing time [illegible] detonating cord [illegible] special [illegible] detonating cord [illegible] special [illegible] detonating cord [illegible] special

Controlled and Secondary Blasting

Secondary blasting is blasting used to break up boulders and oversized fragments resulting from primary blasting. The two principal methods of secondary blasting are block holing and mudcapping. Block holing involves secondary drilling and blasting techniques to fragmentize oversized boulders. Mudcapping involves an explosive charge placed on the surface of the rock and dropped from a mobile crane. Mudcapping uses

Figure 8-14 [illegible] demolition [illegible] (Courtesy of Allied Construction Products, Inc.)

- [illegible]
- [illegible]
- [illegible]
- [illegible]
- [illegible]
- [illegible]
- [illegible]
- [illegible]

6–4 ROCK RIPPING

Employment of Rippers

Ripping is a relatively new method of excavating rock to backfill or fill walls. However, only since the advent of the crawler-mounted ripper has it been economically feasible to rip rock. The availability of powerful heavy machines such as the one shown in Figure 6–15 has made it possible to rip all but the toughest rock. When ripping can be satisfactorily employed, it is usually cheaper than drilling and blasting. Additional advantages of ripping over drilling and blasting include increased production, better safety records, and reduced surface wear.

Ripping Equipment

Although crawler-type tractors are still the most common ripper units, wheel-mounted ripper units are also available, as shown in Figure 6–16. This type of ripper consists of a mounting over the frame of a wheel-mounted tractor. Generally, the ripper hydraulic cylinder permits the tip angle to be varied to obtain optimum results. The tip angle that produces the best ripping results is usually different for each rock structure encountered. Hydraulic ripper mounts are available that automatically vary tip angle as the ripper is raised or lowered.

Ripper tips are made of cast steel or manganese steel. Tips are available in a variety of shapes and sizes. As a rule, tips are selected to match the rock characteristics and the power of the tractor. Tips are also available with replaceable points. Some tips have a pointed shape, while others have a flat tip. Increase in tip penetration

Figure 6–15 Heavy-duty crawler-mounted ripper. (Courtesy of Caterpillar, Inc.)

Figure 6-16 Adjustable parallelogram ripper.

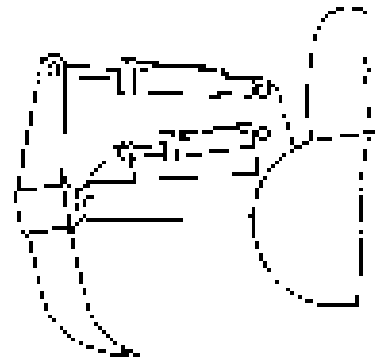

[illegible] tip and shank [illegible] ripper production.

Ripper shanks and tips are available in several different styles and in a variety of lengths for various different types of [illegible]. Shank protection, which fits over the front of the ripper shank to [illegible] the tip and [illegible] shank protection are [illegible] to be easily replaced when necessary.

Ripper Production

The amount of energy [illegible] (Stockton [illegible]) provides a good indication of the rock's ripperability. Charts such as those shown in Figure 6-[illegible] have been created to [illegible] ripper [illegible] rock over a range of [illegible]. When ripping [illegible] the ripper [illegible] will often produce a substantial increase in production and reduce fuel consumption.

Equations for [illegible] to provide ripper production when effective ripping [illegible] and speed are established. Unfortunately [illegible] accurately [illegible] data are available. [illegible] equations under [illegible] conditions.

$$\text{Production (loose yd}^3\text{/hr)} = \frac{[illegible]}{T} \qquad \text{(Eq. 6-[illegible])}$$

$$\text{Production (loose m}^3\text{/hr)} = \frac{[illegible]}{T} \qquad \text{(Eq. 6-[illegible])}$$

where [illegible] = average [illegible]
$\overline{w}$ = average [illegible]
L = length of [illegible]
E = job efficiency factor
T = time for one ripper pass, including [illegible]

D8H RIPPER PERFORMANCE ESTIMATED BY SEISMIC WAVE VELOCITIES
Multi or Single Shank No. 8 Series D Ripper

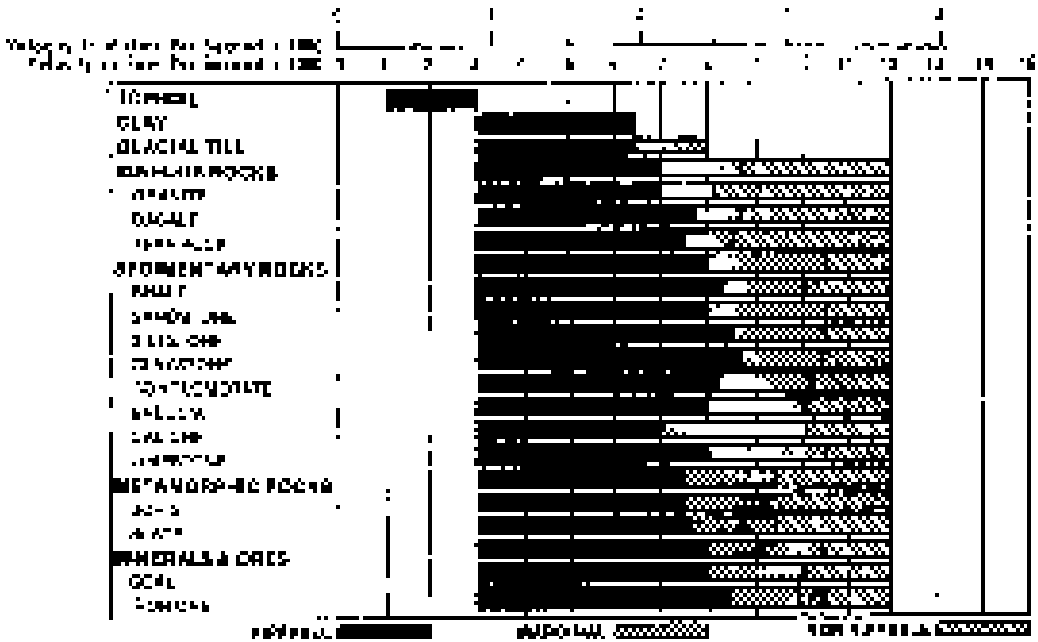

Figure 6-17 Ripper performance vs. seismic velocity of various types of Caterpillar ripers

Considerations in Ripping

Ripping speed and depth are functions of ripper power, shank design, and the material characteristics. The maximum ripper production depends on rock type and structure, and material moisture. The presence and inclination of discontinuities will also affect ripping production. In general, ripping is most efficient in the direction of dip. However, when ripping semi-vertical strata, it may be necessary to rip parallel to the dip to avoid undercutting the layers. The number of shanks to be used on a ripper should be determined by yields that depend on material characteristics, for example. Depth of ripping will vary with the number of shanks used and the power of the machine. Generally, a shank can rip deeper than a layer thickness. Ripping speed should be set to maximize production for the material and shanks. Usually, per is usually best when ripping tough materials. The spacing of ripper passes will depend on material characteristics and the number of shanks used.

When ripping rippable material, always leave a thin layer of material in the excavation to provide a good working surface. For example, 30 cm ripping accuracy is a rock production [illegible] and such an excavation [illegible] ripping.

6-5 ESTIMATING PRODUCTION AND COST

[illegible] production and cost for a typical [illegible] by Example 6-4 and 6-5. Example 6-4 employs [illegible] production for rock hauling, while Example 6-5 employs a more [illegible] approach.

EXAMPLE 6-4

[illegible] the hourly production and the unit cost of a [illegible] in preparing an underground [illegible] drilling and blasting. The [illegible] (12.19 m) [illegible] average depth [illegible] 0.98 m. The material to be excavated is a highly fractured shale with a [illegible] of [illegible] MPa. The drilling equipment will consist of an air-powered rock drill, [illegible] equipment, including steel, [illegible] is estimated at [illegible] 30.5 m/h.

Trial stripping shows that [illegible] drills in a 12 ft (3.66 m) [illegible] provide a [illegible] of [illegible] yd³/h (1.19 m³/h) [illegible] 0.98 m (3.66 m) [illegible] depth. The blasting agent is ANFO (a dual power [illegible] powder with a density of [illegible] lb/ft³ (0.29 kg/m³). [illegible] provide [illegible] 0.5 lb/BCY (0.297 kg/BCM).

A labor force of one drill operator [illegible] is required for drilling, one blaster and two helpers will be employed for blasting.

Cost information:

Labor	Blaster	= $[illegible]
	Helper	$[illegible]
	Drill operator	= $[illegible]
	Compressor operator	$[illegible]
Equipment	Track drill and compressor	= $[illegible]
Material	ANFO	= $[illegible]
	Primer, cap, and standing	= $[illegible]

SOLUTION

(a) Production

$$\text{Trial volume} = \frac{[illegible] \times 0.98}{27} = [illegible] \text{ BCY}$$

$$[illegible] = [illegible] \times [illegible] = [illegible] \text{ BCY}$$

$$\text{Track} = \frac{12^2 - 12}{27} = [illegible] \text{ BCY/m}$$

$$= [illegible] \times 3.66 = [illegible] \text{ BCY/m}$$

$$\text{Drilling yield} = \frac{[illegible]}{[illegible]} = [illegible] \text{ yd}^3/\text{h}$$

$$\left[= \frac{4{,}500}{4{,}117} = 1.09 \text{ BCM/m} \right]$$

$$\text{Production} = 4{,}500 \text{ BCM/h} \times 10.5 \text{ h/d} = 47{,}250 \text{ BCM/d}$$

$$[= 1{,}968 \times 10.5 = 20{,}664 \text{ BCM/d}]$$

$$\text{Time required} = \frac{20{,}664 \text{ BCM}}{2{,}711 \text{ BCM/h}} = 7.62 \text{ h}$$

$$\left[= \frac{20{,}664}{2{,}711} = 7.62 \text{ h} \right]$$

(c) Drilling cost

$$\text{Labor} = \$[illegible]/\text{h}$$

$$\text{Equipment} = \$[illegible]/\text{h}$$

$$\text{Drilling cost/volume} = \frac{\$[illegible]/\text{h}}{[illegible] \text{ BCM/h}} = \$[illegible]/\text{BCM}$$

$$= \frac{\$[illegible]}{[illegible]} = \$[illegible]/\text{BCM}$$

(d) Blasting cost

Material:

$$\text{ANFO} = 0.[illegible] \text{ BCM} \times [illegible] \text{ BCM} \times \$[illegible] = \$[illegible]/\text{hole}$$

$$[= [illegible] \times [illegible] \times [illegible] = \$[illegible]/\text{hole}]$$

$$\text{Powder consumption/hole} = [illegible]$$

$$\frac{\$[illegible]}{[illegible]} = \$[illegible]/\text{BCM}$$

$$\frac{\$[illegible]}{[illegible]} = \$[illegible]/\text{BCM}$$

Labor:

$$\text{Unit cost} = \frac{\$[illegible]}{[illegible] \text{ BCM/h}} = \$[illegible]/\text{BCM}$$

$$\left[= \frac{\$[illegible]}{[illegible]} = \$[illegible]/\text{BCM} \right]$$

$$\text{Total blasting} = \$[illegible] + \$[illegible] = \$[illegible]/\text{BCM}$$

$$[= \$[illegible] + \$[illegible] = \$[illegible]/\text{BCM}]$$

(e) $\text{Total cost} = \$[illegible] + \$[illegible] = \$[illegible]/\text{BCM}$

$$= \$[illegible] + \$[illegible] = \$[illegible]/\text{BCM}$$

EXAMPLE 6–5

[illegible] monthly production [illegible] work [illegible] by [illegible] per [illegible] [illegible] [illegible]

PROBLEMS

1. [illegible] rectangular [illegible] 24 ft (7.4 m) deep [illegible] will yield a [illegible] of 215 ft (58 m). Determine the [illegible] per foot (meter) of [illegible].

2. A [illegible] dipper will be used for excavating [illegible] weighing [illegible] (1876 m³). Field tests [illegible] had the [illegible] rock excavating [illegible] of [illegible] (391 m³/h) [illegible] 480 to 122 min per [illegible] 1.5 mph (2.4 km/h). [illegible] 0.70. Measure cost including the operator's [illegible] the hourly production and unit [illegible].

3. [illegible] consists of [illegible] each [illegible] Each side chute [illegible] by a [illegible] The [illegible] Find the [illegible] required to safely [illegible] conditions.

4. [illegible] will have and will produce? What [illegible] must be chosen [illegible] the divide [illegible] the [illegible]?

5. Using the [illegible] find the [illegible] and the [illegible] of the [illegible]

Distance		Time (min)
(ft)	(m)	
10	[illegible]	[illegible]
20	[illegible]	22.0
30	[illegible]	22.3
40	[illegible]	[illegible]
50	[illegible]	[illegible]
60	[illegible]	33.3
70	[illegible]	[illegible]
80	[illegible]	[illegible]

6. [illegible] rock excavated by [illegible] the rock [illegible] moving a [illegible] velocity of [illegible] (1530 m/s). [illegible] indicate [illegible] [illegible] Assume [illegible] 30 [illegible] [illegible] 30 [illegible] (60 [illegible]) [illegible] will be used.

Cost estimation

Labor:	Drilling crew	= $[illegible]/hr
	Blasting crew	= $[illegible]/hr
Drilling equipment		= $[illegible]/hr
Material:	ANFO	= $[illegible]/lb ($[illegible]/kg)
	Fuses, caps, and detonating	$[illegible]/shot

7. [illegible] velocity of [illegible] m/s ([illegible] ft/s) [illegible] probe by a DPH [illegible] equipment [illegible] 50 ft/s [illegible] and [illegible] impact [illegible] Excavating [illegible]

8. A parallel series [illegible] consisted of six branches of eight [illegible] Holes were spaced [illegible] m apart in a [illegible] gauge is [illegible] by a No. 16 gauge [illegible] Finally [illegible] gauge [illegible] m [illegible] Finally [illegible]

9. [illegible] estimate hourly production [illegible] be [illegible] length of [illegible] time [illegible] of each [illegible] job [illegible] and [illegible] for [illegible] computer program

10. [illegible] estimate hourly production [illegible] drilling [illegible] should include [illegible] equipment [illegible] average [illegible] and [illegible] power [illegible] and equipment costs, personnel [illegible] and [illegible] explosives and [illegible] fuses, caps, and detonating [illegible] computer program

REFERENCES

1. [illegible] Washington, DC
2. Clark, [illegible] Handbook, 3rd ed. New York: McGraw-Hill, 1966.
3. [illegible] Rock Drilling, Princeton, NJ
4. [illegible] Dallas, TX
5. [illegible] Peoria, IL
6. [illegible] Washington, D.C.
7. [illegible] Rock Tools, Rock [illegible]

7

Production of Aggregate, Concrete, and Asphalt Mixes

[illegible]

7–1 PRODUCTION OF AGGREGATE

[illegible]

Rock Crushers

[illegible]

[illegible]

Figure 7-1 Aggregate processing plant. (Courtesy of Cedarapids, Inc.)

bers, roll crushers (Figure 7-3c) produce relatively cubical shapes by crushing the particles between two relatively smooth rolls. Roll crushers are smaller than ball mills but are designed to produce a fine product from fine feed.

The production of crushed stone depends on crusher type and the crusher setting, feed size, crushing speed, and operating conditions. The best combination of these variables is particular to each application. It is obtained through trial and error by the manufacturer's engineers using expensive equipment. However, Tables 7-2 and 7-3 present representative values of product size for jaw and roll crushers respectively. These tables also present the average and problem sizes which result. Notice that a standard jaw crusher is larger than the roll crusher but the roll crusher consumes more power.

The crusher which the material first enters is known as the primary crusher. The product is passed to another crusher, this crusher is known as a secondary crusher. Similarly, a third crusher may be required, the three crushers in line are known as a tertiary crusher. Screens are used in conjunction with crushers to ensure that only the material which is small enough passes through the crusher and material is fed back to the crusher which is too large. Screening is discussed later in this chapter. When screens are used to feed back to the crusher, the crusher is operating in "closed circuit".

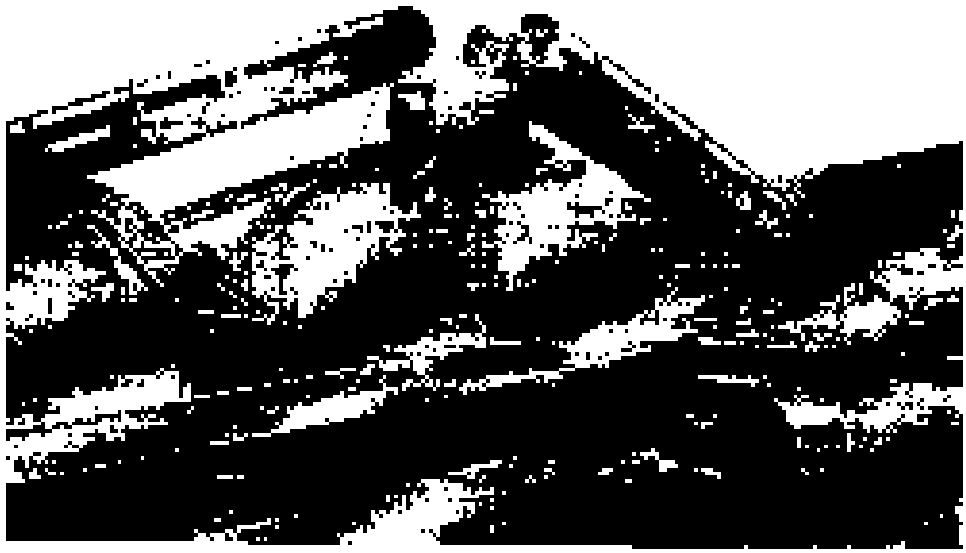

Figure 2–2 Portable cone crusher (Courtesy of Telsmith, Inc. and Johnson Crushers International)

Table 2–1 Principal types of rock crushers and their characteristics

Crusher Type	Maximum Feed Size	Reduction Ratio	Product Size	Crushing Stage
Jaw crusher	[illegible]	6 to 1	[illegible]	Primary
Impact crusher	[illegible]	[illegible]	[illegible]	Primary
Horizontal shaft impactor	[illegible]	[illegible]	[illegible]	Secondary, Tertiary
Standard cone crusher	[illegible]	[illegible]	[illegible]	[illegible]
Hammermill	[illegible]	[illegible]	[illegible]	
Gyratory cone	[illegible]	[illegible]	[illegible]	[illegible]
Tri-roll	[illegible]	[illegible]	[illegible]	[illegible]
Roll crusher	[illegible]	[illegible]	[illegible]	
Impact	[illegible]	[illegible]	[illegible]	[illegible]
Vertical shaft impactor	[illegible]	[illegible]	[illegible]	[illegible]

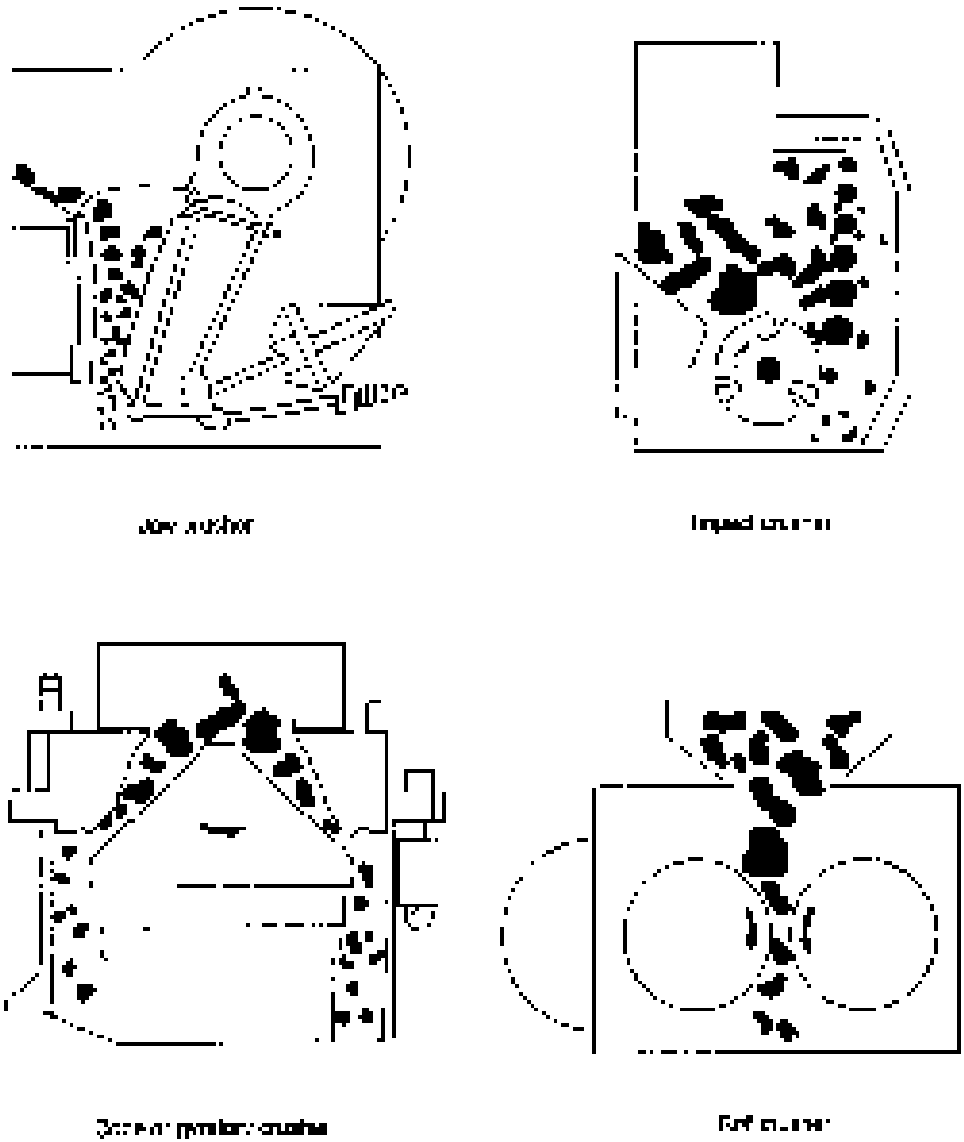

Figure 7.3 Major types of rock crushers.

Feeders and Screens

Feeders (Figure 7.4) are used to uniformly [illegible] crushers. Types of feeders [illegible] grizzly feeder, reciprocating plate feeder, vibrating [illegible] belt feeder, rotary [illegible] apron feeder consists of a [illegible] plate [illegible] which [illegible] like a conveyor belt and which [illegible] feeders [illegible] reciprocating grizzly [illegible] crusher [illegible] which [illegible] which [illegible] material which [illegible]

Table 7–2 Gradation of jaw crusher output (percent passing—[illegible])

Screen Size		in.	5/8	1	1½	1¾	2	2½	3	4	5	6	7	8
			Crusher Closed Side Setting											
in.	mm	mm	19	25	32	38	51	64	76	102	127	152	178	203
10	254										[illegible]	[illegible]	[illegible]	[illegible]
8	203										96	92	81	73
7	178									100	94	87	74	65
6	152								100	94	88	80	64	55
5	127							100	96	91	75	70	57	47
4	102							97	93	[illegible]	62	[illegible]	[illegible]	33
3	76						100	90	76	66	47	37	32	27
2½	64				100	100	92	[illegible]	66	[illegible]	[illegible]	[illegible]	35	27
2	51			100	90	86	82	64	52	36	29	25	21	16
1½	38		100	89	80	74	66	47	36	26	22	20	17	14
1	25		98	81	69	74	52	40	32	25	20	17	15	12
¾	19		94	72	60	70	43	31	26	19	15	14	11	10
½	13		80	61	55	43	31	23	20	15	12	11	9	7
⅜	10		55	51	37	30	22	16	14	11	9	8	7	6
¼	6		41	32	25	20	12	11	9	8	7	6	5	5
3/16	5		27	22	16	13	12	9	8	6	5	5	4	3
#4	4.8		21	15	12	10	9	7	6	5	4	4	3	2
#8	2.4		10	8	6	7	5	4	4	3	3	3	2	1
#16	1.2		7	5	6	6	3	3	3	3	2	2	2	1
#30	0.6		4	3	3	3	2	2	1	1	1	0.8	0.8	0.8
#50	0.3		2	2	2	-	-	-	-	-	0.6	0.6	0.4	[illegible]
#100	0.2		1	1	1	1		0.8	0.8	0.4	0.3	0.2	[illegible]	0.2

Table 7-5 : Calculation of roll crusher cut-size (screen passing—screen oversize)

Screen Size		In	Crusher Closed Side Setting										
			7	7	8	8	1	1	1	2	2	3	4
In	mm	mm	6	10	13	19	25	32	38	51	64	76	102
6	150											100	100
5	127										100	96	93
4	102									100	90	81	75
3	75								100	90	81	66	55
2½	64							100	93	82	72	64	49
2	51						100	95	87	77	67	57	37
1½	40						87	79	70	54	45	35	23
1	32					100	65	60	60	43	42	33	20
	25				100	90	79	66	59	39	37	27	11
¾	19			100	89	70	50	49	38	27	25	21	10
½	13		100	80	61	58	41	32	27	22	15	6	19
⅜	10		97	62	52	[illegible]	28	25	21	13	14	12	5
¼	6		52	50	42	38	17	12	16	12	10	9	7
#4	4.8		38	43	37	27	16	11	15	9	11	7	7
#8	2.4		33	28	17	17	10	7	7	6	5	4	3
#16	1.2		10	10	7	7	6	5	4	3	2	2	2
#30	0.6		7	7	5	4	3	3	3	2	1	1	1
#50	0.3		3	1	1	1	1	2	2	1	0.8	0.7	0.6
#100	0.15		1	1	2	2	1	1	1	0.7	0.7	0.7	0.7

Figure 7–4 Apron feeder.

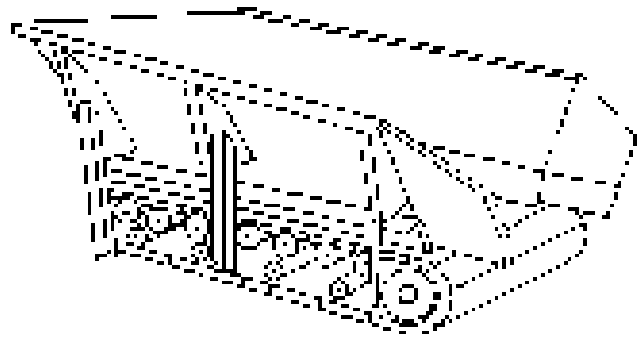

Figure 7–5 Three dec
[illegible]

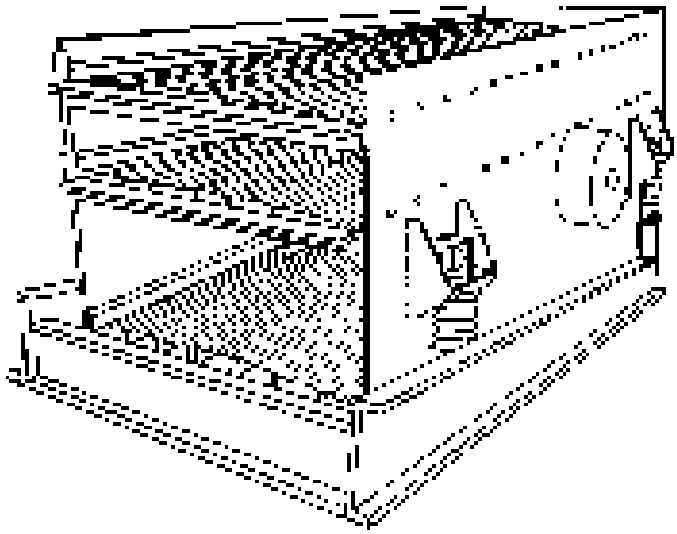

[illegible]

Figure 7–6 [illegible] of points in [illegible] aggregate processing system [illegible] aggregate by size for storage. Building [illegible] types of [illegible] during horizontal and inclined [illegible] and [illegible] for [illegible] of [illegible] simply [illegible] from the [illegible] system.

The capacity of a screen is determined by a number of factors including screen [illegible] and screen opening size, depth of the screen, position in the deck, amount of [illegible] material, and material condition (dry and wet). The relative complexity of the problem of estimating screen capacity [illegible] methods used [illegible] simplified. [illegible] capacity of the screen presented in Figure 7–6 is [illegible] in Example 7–1

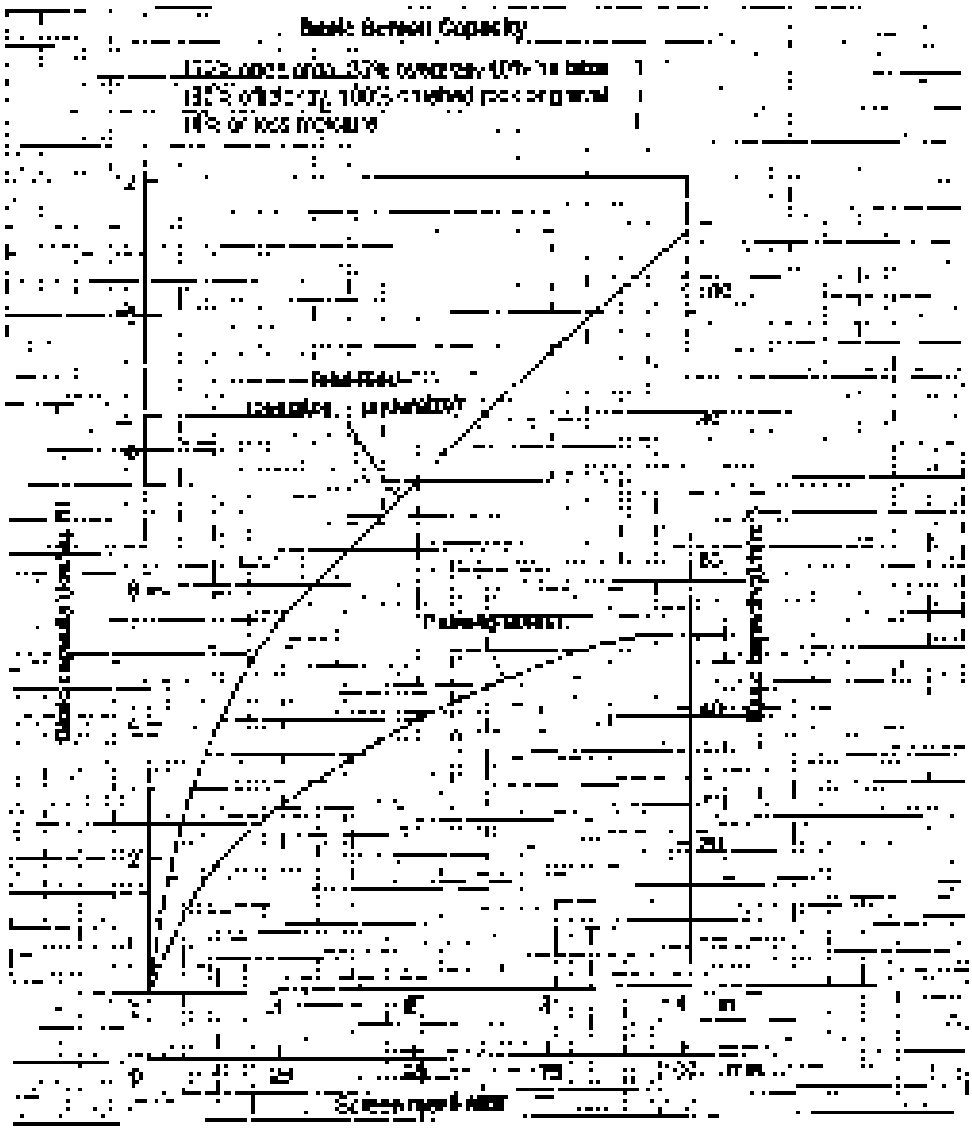

Modifying Factors

Deck Factor		Moisture Factor		Oversize Factor	
Position	Factor	% Passing Mesh Indicator	Factor	% Over Screen Opening	Factor
Top	1.0	1	0.8	0	1.0
Second	0.5	25	0.9	10	0.9
Third	0.3	45	1.0	20	0.8
Fourth	0.2	65	0.9	30	0.6
		85	0.8	40	0.4

Weight Factor

$$W = \frac{\text{Weight (lb ft}^3\text{)}}{100}$$

$$W = \frac{\text{Weight (kg m}^3\text{)}}{1600}$$

Figure 7.6 Estimating screen capacity.

EXAMPLE 7–1

A gravel mixture is produced from a bank (225 tph) of a total gravel and attempting to produce [illegible] Screen above. The top screen is the deck of a [illegible] screen. The gravel to be screened is shown [illegible] passing 3 in. (76 mm), 225 passing [illegible] and 50% passing [illegible] mm). Material weight is [illegible] (1842 kg/m³). Determine the size of the [illegible] mm screen to be used. Check half [illegible] and [illegible] capacity.

SOLUTION

Static capacity (Figure 7–6):

$$\text{Material feed} = 0.5\ \text{tons/ft}^2\ \text{(}[illegible]\ \text{kg/m}^2\text{)}$$

$$\text{Passing screen} = [illegible]\ \text{tons/ft}^2\ \text{(}[illegible]\ \text{kg/m}^2\text{)}$$

Deck position factor (top) = 1.0
Half-size factor (deck) = 1.0
Oversize factor (8%):

$$\text{Top: feed} = 0.55 \quad \text{oversize factor} = 1.04$$

$$\text{Material factor} = \frac{1.5}{0.5} = 3.0$$

$$\left[= \frac{[illegible]}{[illegible]} = [illegible]\right]$$

Total feed = 210 tons/h ([illegible] kg/h)
Passing screen = 225 × 0.02 = 4.5 tons/h ([illegible] kg/h)
Bed feed capacity = [illegible] × 1.0 × 0.55 × 1.04 × 3.0 = 12.5 tons/h/ft²

$$\left[= [illegible] \times 1.0 \times 1.8 = [illegible] \times 1.35 = [illegible]\ \text{kg/h/m}^2\right]$$

$$\text{Required screen area for total feed} = \frac{210}{12.5} = 16.8\ \text{sq ft}$$

$$\left[= \frac{[illegible]}{[illegible]} = 1.8\ \text{m}^2\right]$$

$$\text{Passing capacity} = 5.5 \times 1.0 \times 1.0 \times 1.04 \times 1.15 = 7.1\ \text{tons/h/ft}^2$$

$$\left[= [illegible] \times 1.0 \times 1.04 \times 1.15 = [illegible]\ \text{kg/h/m}^2\right]$$

$$\text{Required screen area for passing} = \frac{4.5}{7.1} = 0.63\ \text{sq ft}$$

$$\left[= \frac{[illegible]}{[illegible]} = 0.0\ \text{m}^2\right]$$

Therefore, the minimum screen area required for this screen is necessary for the passing capacity and is equal to 20.7 sq ft (1.9 m²).

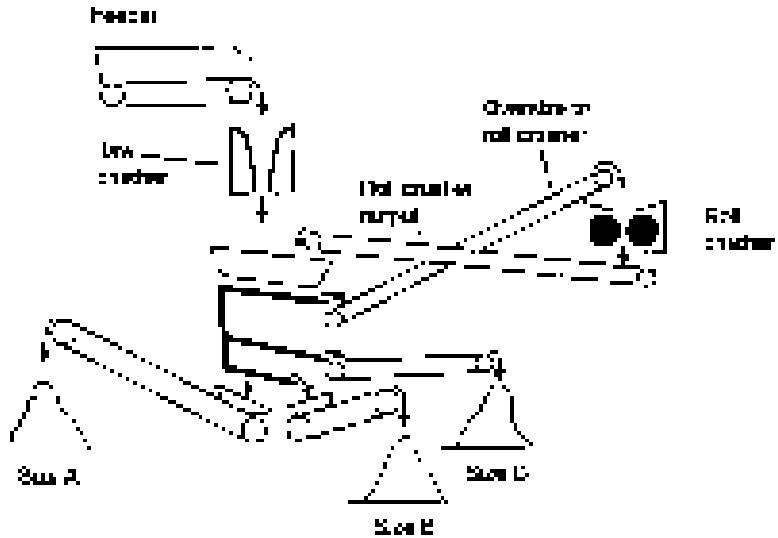

Figure 7-7 Aggregate flow through crushers.

The Crushing Cycle

A typical flow of rock through a primary jaw crusher and a secondary roll crusher is shown in Figure 7-7. Notice that the capacity of the primary crusher is controlled by screening the output of the jaw crusher ahead of the roll crusher. The capacity of both crushers is further controlled by recycling oversized material.

Estimating capacity and power requirements for crushers involves complex calculations. Crushers are usually less than manufacturer's data and provide accurate estimates. However, computer programs such as the one shown in Example 7-2 have been developed to assist in making preliminary estimates.

EXAMPLE 7-2

A primary jaw crusher with a closed setting of 1 in. (25 mm) is processing 200 tons/h (181 t/h). The crusher output is to be screened into the following sizes: 2 in. (51 mm) and over, 1 in. (25 mm) to 2 in. (51 mm), 3/8 in. (9.5 mm) to 1 in. (25 mm), and under 3/8 in. (9.5 mm). Oversize material will be recycled to the jaw crusher. A roll crusher will be used to reduce the material to 3/4 in. (19 mm). The output from the roll crusher will be screened to 3/8 in. (9.5 mm) and under. Determine the capacity of the screen if it is to be 90% efficient for the following sizes:

Size A: 2 in. (51 mm)

Size B: 1 in. (25 mm)

Size C: 3/8 in. (9.5 mm)

SOLUTION

Distribution of primary crusher output (table 7-2):

Size		Output
inches	mm	tons per hour (%)
+2	+51	(0.36 − 0.20) × 250 = 40.0 (16.0)
1½ to 2	38–51	(0.55 − 0.36) × 250 = 47.5 (19.0)
¾ to 1½	19–38	(0.95 − 0.55) × 250 = 100.0 (40.0)
−¾	−19	(1.00 − 0.95) × 250 = 12.5 (5.0)

Distribution of secondary crusher output (table 7-3):

Crushed rock used to yield 125 tons/h (113 mt/h) passing 2 in (51 mm)

$$\text{secondary} = \frac{125}{0.7} = 178.6 \text{ tons/h } (162.1 \text{ mt/h})$$

Size		Output
inches	mm	tons per hour (%)
+¾	+19	(0.36 − 0.20) × 178.6 = 28.6 (16.0) recycle
½ to ¾	12–19	(0.77 − 0.40) × 178.6 = 66.0 (37.0)
¼ to ½	6–12	(0.98 − 0.77) × 178.6 = 37.5 (21.0)
−¼	−6	(1.00 − 0.98) × 178.6 = 3.6 (2.0)

Combined output:

Size		Output
inches	mm	tons per hour (%)
+2	+51	0
1½ to 2	38–51	47.5 + 0.16 × 28.6 = 52.1 (26.0)
¾ to 1½	19–38	100.0 + 0.37 × 28.6 = 110.6 (55.3)
−¾	−19	12.5 + 0.21 × 28.6 = 18.5 (9.2)
		Total = 201.2 (100.0)

Note that the total feed to the secondary crusher is the sum of the two crushers plus the larger than 2 in (51 mm) fraction coming from the screen. The recycle which is not fed to the secondary crusher is the material between ¾ in and 2 in (19 mm and 51 mm). The 28.6 tons/h (25.9 mt/h) is the material between ¾ in and 1½ in (19 mm and 38 mm). Although the full-capacity output of the secondary crusher is 178.6 tons/h (162.1 mt/h), it is not necessarily the output of 200 tons/h (181.4 mt/h).

Washers and Other Equipment

Aggregate [illegible] washing [illegible] of organic impurities [illegible] coating. Common types of washing equipment include [illegible] washers, and drum washers, and [illegible] washing [illegible] equipped with [illegible] screens. Underwater [illegible] to the aggregate [illegible] with water and [illegible] machine [illegible]. Wet screens are [illegible] washing [illegible] equipped with [illegible] spray bars to remove [illegible] material to the aggregate [illegible] screen. Any [illegible] dissolve [illegible] material to the aggregate [illegible] through the [illegible] the screen bodies. [illegible] consist of [illegible] screens [illegible] through. [illegible] material [illegible] of [illegible] through [illegible] the [illegible] conveyors, the [illegible] material [illegible] essentially [illegible] material [illegible] gate [illegible] the tank [illegible] where it can be [illegible].

The other major [illegible] processing equipment [illegible] conveyors [illegible] washers, and [illegible] processed [illegible] conveyor [illegible] conveyor [illegible] stockpile.

7–2 PRODUCTION OF CONCRETE

Concrete [illegible] portland cement, aggregate, and water. [illegible] components, [illegible] may be [illegible] in part. [illegible] properties of the concrete mix. The [illegible] involved in the production of concrete include batching, mixing, transporting, placing, consolidating, finishing, and curing. The production and transporting of plastic concrete are [illegible] in this section. The placing, consolidating, finishing, and curing operations are described in Chapter [illegible] and in Chapter 12 for [illegible] construction.

[illegible] equipment [illegible] facilitating [illegible] that concrete possesses certain properties. [illegible] and [illegible] uniformity, workability, [illegible] and [illegible]. Desirable properties [illegible] workability and [illegible]. All of these properties are in turn affected by the [illegible] components and the design [illegible] as well as the construction techniques employed.

Types of Concrete

Concrete [illegible] classified into several categories according to its application and density. Normal-weight [illegible] usually weighs from [illegible] pounds per cubic foot (2240 to 2500 kg/m³). Depending on the [illegible] and type of aggregate used, it can weigh as little as 150 lbs/ft³

[illegible] specified is used by designers for design purposes. Typical 28-day compressive strength ranges from 20,000 to 40,000 psi (138 to 276 MPa). Advanced technologies [illegible] unit weight [illegible] 150 lbs/ft³ (2400 kg/m³) with 28-day compressive strength greater than [illegible] psi (70 MPa). Its lightweight is achieved by using lightweight aggregates such as expanded shale, clay, slate, and slag. Lightweight structural concrete may weigh from [illegible] lbs/ft³ (1600 kg/m³) and have a 28-day compressive strength from about [illegible] psi (6.9 to 34.5 MPa). As [illegible] is primarily a [illegible] material, its properties depend on those of its components. Aggregate proportions used for structural concrete are [illegible] and [illegible]. In some [illegible] is used in the [illegible] of [illegible] aggregate particles.

Most concrete is formed into a structure such as a slab in which the weight of the concrete provides most of the strength of the structure. Thin-walled reinforced concrete [illegible] is usually similar to that of regular concrete. Mass concrete is concrete made with heavy aggregates such as barite, magnetite, and steel punchings [illegible] provide [illegible] shielding. Unit weight may range from 90 to [illegible] lbs/ft³ (1440 to [illegible] kg/m³). Air-entrained concrete is concrete containing [illegible] Strength is measured in [illegible] by testing specimens in accordance with [illegible] ASTM C 39. Flexural strength is measured by testing a beam of the sample when the concrete is used in applications involving [illegible] such as pavements and floors.

Remarkably, concrete is a versatile material suitable for high-temperature applications such as boilers and furnaces. The maximum service temperature for structural concrete depends on the type of cementitious aggregate used. Portland cement is [illegible] that [illegible] can [illegible] the chemical [illegible] prior to placement. [illegible] concrete to contract [illegible] and reverse [illegible] surface [illegible] to achieve the desired [illegible]. [illegible] cement may be used in these applications. Such [illegible] may include expanded aggregates, [illegible] produced by [illegible] calcined [illegible], and [illegible] surfaces. Anti-[illegible] are also [illegible] and [illegible] in walls and [illegible].

Concrete Components

The essential components of concrete are portland cement, aggregate, and water. Another component, air, [illegible] to improve certain desirable properties in the concrete. The [illegible] and effects of each of these components are [illegible] in the following paragraphs.

Cement

There are five principal types of portland cement recognized by the American Society for Testing and Materials (ASTM). Types I and II are used in construction. Type I cement is [illegible] and is suitable for all general applications. Type II cement [illegible] and is suitable for use in structures such as dams, piers, and drainage systems where groundwater contains a moderate sulfate. Type III cement

[illegible]

[illegible]

Aggregates

Aggregates are hard, granular materials, mostly made of sand and gravel or crushed rock. The aggregates make up about 70–80% of concrete volume. Poor aggregates simply fill space and do not contribute much to the properties of the finished concrete. To produce quality concrete, each aggregate particle must be completely covered with cement paste and properly fill the voids between larger aggregate particles. The quantity of fine cement paste could be reduced if the aggregate particle sizes are well distributed and the aggregates are free of impurities. Aggregates must be strong, resistant to crushing and thermal cycling, and free of substances that would interfere with bonding of the cement paste to the aggregate.

Water

Water is required in the concrete mix for several purposes. Primarily, it is needed for the chemical reaction between cement and water which produces a material bond. The bond is primarily the result of a chemical reaction called hydration. If aggregates are not saturated, some of the water will be absorbed by the aggregates, and they will either add or subtract water from the mix. Mixture proportioning therefore must account for the amount of water added or removed by the aggregates. Moisture in the aggregates must be considered when proportioning the amount of water to be added to the concrete.

The water-cement ratio controls the strength, workability, and durability of the concrete. The lower the water-cement ratio, the higher the concrete strength and durability, provided that the mix has adequate workability. The water-cement ratio is selected by trial mixes to meet the requirements of the concrete mix. Water-cement ratio should be kept as low as

[illegible] 0.45 to 0.55 by weight. In [illegible] of water quality, almost any water suitable for drinking will be satisfactory as mixing water. However, impurities [illegible] in the water may affect setting time and interfere with hydration. Salt water may be used for mixing concrete, but it will usually result in concrete compressive strengths 15 to 20% lower than normal. The use of lower salinity water [illegible] improve the final strength [illegible]. However, exposure [illegible] will [illegible]. When [illegible] it is recommended that [illegible] mixing [illegible] 25% strength.

Additives

A number of types of additives [illegible] concrete mixtures. Some of the principal types of additives [illegible] retarding agents, water reducing agents, [illegible] agents, air-entraining agents, and workability agents. Accelerators [illegible] significantly increased [illegible] freezing and thawing as well as [illegible] caused by the use of deicing chemicals. Entrained air also increases the workability and plasticity [illegible] of fresh concrete. For these reasons air entrained concrete is widely used for [illegible] and other structures exposed to freezing and thawing.

Water reducing agents [illegible] workability of concrete [illegible]. This [illegible] a water-reducing agent. The amount of water in the mix [illegible] without changing the consistency. However, [illegible] agents [illegible] retarding agents [illegible] slow the rate of hydration of cement. Retarders are [illegible] to offset [illegible] high temperatures during mixing, [illegible]. They are also used [illegible] by retarding the setting of concrete when pumping concrete over long distances. The use of retarders to produce exposed aggregate surfaces is discussed in Section [illegible]. Accelerators act in the opposite manner to retarders. They shorten the setting time and increase the early strength of concrete. Since the rate of hydration [illegible], calcium chloride, is an [illegible] it should not be used in [illegible] with [illegible] prestressing steel or aluminum or galvanized steel.

Pozzolans are finely divided materials, such as [illegible] ash, calcined clays, and silica fume, which react with hydrated lime [illegible]. Pozzolans are used to reduce the heat of hydration, increase the workability, and reduce the segregation of mixes. Workability agents improve the workability of mixes. However, air-entraining agents, water-reducing agents, pozzolans, and retarders will also increase the workability of mixes.

Mix Design

The mix design is the [illegible] problem of selecting the most economical concrete that meets the required [illegible] and workability. The most economical mix is normally the one that uses the highest type of aggregate [illegible] while providing acceptable workability at the required water-cement ratio.

Table 7–4 Maximum water-cementitious material ratios and minimum design strengths for various exposure conditions (Courtesy of Portland Cement Association)

Exposure condition	Maximum water-cementitious material ratio by mass for concrete	Minimum design compressive strength f'_c, MPa (psi)
Concrete protected from exposure to freezing and thawing, application of deicing chemicals, or aggressive substances	Select water-cementitious material ratio on the basis of strength, workability, and durability requirements	Select strength based on structural requirements
Concrete intended to have low permeability when exposed to water	0.50	31 (4500)
Concrete exposed to freezing and thawing in a moist condition or to deicers	0.45	31 (4500)
For corrosion protection of reinforcement for concrete exposed to chlorides from deicing salts, salt water, brackish water, seawater, or spray from these sources	0.40	35 (5000)

Adapted from ACI 318 (1999)

Table 7–5 Recommended slumps for various types of construction (Courtesy of Portland Cement Association)

Concrete construction	Slump, mm (in.) Maximum[1]	Minimum
Reinforced foundation walls and footings	75 (3)	25 (1)
Plain footings, caissons, and substructure walls	75 (3)	25 (1)
Beams and reinforced walls	100 (4)	25 (1)
Building columns	100 (4)	25 (1)
Pavements and slabs	75 (3)	25 (1)
Mass concrete[2]	50 (2)	25 (1)

[1] Slump can be increased 25 mm (1 in.) for methods of placement or consolidation other than vibration.
[2] Mass concrete is defined as any massive placement.
Adapted from ACI 211.1

A typical mix design procedure is: Translate the specification requirements into concrete properties, such as strength, durability, and workability requirements. Select the maximum water-cementitious material ratio. Select the maximum aggregate size. Select the slump. Estimate the mixing water requirement. Calculate the cement content. Estimate the amount of coarse aggregate. Estimate the amount of fine aggregate. Make adjustments for moisture in the aggregates. Make trial batches and test the properties of the fresh and hardened concrete. Make adjustments in the mix design if necessary.

[illegible] and the amount of each component required for a batch of concrete may be calculated by the method described.

Batching and Mixing

The process of proportioning cement, water, aggregates, and admixtures prior to mixing concrete is called batching. Since concrete specifications commonly require a batching accuracy of 1 to 3%, capacity of the mixer components must be sized so that they can be proportioned by weight. Central batching plants that serve several aggregate and cement batching units are often used for large mixing tasks such as dam construction. Central mixing plants in such batching plants operate in a manner similar to that of the stationary mixer. The addition of water to the mix may be controlled by the batching plant or it may be accomplished by the mixer operator. Batching for small construction projects is accomplished by having the required quantity of cement and aggregate directly from the skip hoist of the mixer. Water is added by the mixer operator. Cement for small projects is usually measured by using sack (94 lbm of the bag).

A wide variety of classification systems for concrete mixers have been developed in the United States to identify mixer type and capacity. In this system, the mixer capacity is the rated capacity of the mixer in cubic feet (0.028 m³) of plastic concrete. Safe working capacity should be distinguished as the portion of the mixer capacity that can be mixed. Safe working capacity is generally taken as 80% of the mixer capacity by more than 10% [illegible] the mixer. [illegible] Mixers are classified by the method of mixing, the method of discharge, and the method of charging. The most common types of mixers are the tilting drum mixer, the rotating drum mixer, and so on.

Concrete mixers are available as stationary, semi-stationary, or mobile units. Stationary units are used in central mixing plants, for concrete pipe, and for large construction projects. Mobile units are used for small projects, such as single-family dwellings. Mixer capacities range from 10 ft³ (0.28 m³) for the smallest mixer to 30 ft³ (0.85 m³) for the largest. The most common type of construction mixer is the tilting drum mixer. It is used for small projects where ready-mix concrete is not available or not economical. For projects such as dams, it is used in supply concrete for projects such as dams, which require large quantities of concrete.

Truck mixers or transit mixers (Figure 3-8) are multipurpose mixers capable of mixing and transporting concrete. The product they deliver is a uniform mixture. The total amount is limited by the mixer's capacity, which is usually 10 to 15 yd³ (7.6 to 11.5 m³). Truck mixers are also capable of operating as a volumetric mixer for supplying plastic concrete from a central batching plant. A truck mixer can also be used as a mixer to blend large quantities of concrete. Truck mixers are capable of mixing. Water tank capacity must be sufficient to provide the required water for mixing and for flushing equipment. Truck mixers are equipped with a drum that rotates at a speed of 10 to 15 rpm. Mixing blades are attached to the drum and serve to the drum when used for mixing. Truck mixers are also capable of operating as a volumetric mixer for supplying plastic concrete from a central batching plant. A truck mixer can also be used as a mixer to blend large quantities of concrete. Truck mixers are capable of mixing. Water tank capacity must be sufficient to provide the required water for mixing and for flushing equipment. Truck mixers are equipped with a drum that rotates at a speed of 10 to 15 rpm. Mixing blades are attached to the drum and serve to the drum when used for mixing.

Paving mixers are self-propelled vehicles that are used for small-scale paving operations. They are equipped with a drum that rotates at a speed of 10 to 15 rpm.

Figure 7–8 Truck mixer (courtesy of Kenworth Truck Company)

[illegible] paving mixers are now more often used to supply dispersion [illegible] stationary mixers. Truck mixers [illegible] drum mixer. When a worker [illegible] pavement [illegible] pavement [illegible] 0.5 to 0.7 m³ per [illegible].

A commercial mixing unit [illegible] 0.76 m³. Its [illegible] specified [illegible] 2.0 J/m. A mixing procedure [illegible] has been found to help [illegible] uniform [illegible] 10% of the [illegible] drum. After charging the drum, all [illegible] charging, and the mixing [illegible] 15 [illegible] after charging is completed. Time [illegible] shaft not begin until [illegible] mixer [illegible] from the [illegible]. All water should be added before [illegible] mixing time [illegible] spread. Slumps of the truck mixer [illegible] truck unless [illegible] concrete [illegible] equipment also [illegible] all [illegible] including [illegible] speed, [illegible] mixer [illegible] equipment [illegible] in truck mixers should be discharged within 20 [illegible] after the [illegible] mixing and [illegible] 300 times.

Estimating Mixer Production

Although a concrete mix design has been established, the volume of portland cement produced by the mix may be determined by [illegible]. A [illegible] method for calculating the cement content is established by summing the absolute volume of mix components. The [illegible] conversion [illegible] following formula:

$$\text{Volume (cm}^3\text{)} = \frac{\text{Weight (lb)}}{62.4 \times \text{specific gravity}} \qquad (7\text{–}11)$$

$$\text{Volume (L)} = \frac{\text{Weight (kg)}}{1000 \times \text{specific gravity}} \qquad (7\text{–}12)$$

When calculating the volume of aggregate using equation 7–11 or equation 7–12, the weight must be based on a saturated, surface dry (SSD) condition, such as, after a [illegible] absorption [illegible] water in the mix. [illegible] time flow [illegible] more [illegible] quantity of water [illegible] equation 7–[illegible] uses these procedures.

EXAMPLE 7–3

(a) Calculate the volume of absolute concrete that will be produced by the mix design given in the table.

Component	Specific Gravity	Quantity lb	Quantity kg
Cement	3.15	340	154
Sand (SSD)	2.65	940	426
Gravel (SSD)	2.60	1210	549
Water	1.00	310	141

(b) Determine the actual weight of each component to be used in a cubic yard of concrete if the sand contains 3% moisture and the gravel contains 2% excess moisture.

(c) Determine the weight of each component required to make a cubic yard of concrete if the mix contains

SOLUTION

(a) Cement volume $= \frac{340}{3.15 \times 62.4} = 1.73$ ft^3

$$\left[= \frac{154}{3.15 \times 1000} = 0.05 \text{ m}^3\right]$$

$$\text{Sand volume} = \frac{640}{2.65 \times 62.4} = 3.87\ \text{cu ft}$$

$$\left[= \frac{1.75}{2.65 \times 1000} = 0.0661\ \text{m}^3 \right]$$

$$\text{Gravel volume} = \frac{1010}{2.65 \times 62.4} = 6.11\ \text{cu ft}$$

$$\left[= \frac{1.75}{2.65 \times 1000} = 0.1102\ \text{m}^3 \right]$$

$$\text{Water volume} = \frac{250}{1.00 \times 62.4} = 4.01\ \text{cu ft}$$

$$\left[= \frac{0.25}{1.00 \times 1000} = 0.0250\ \text{m}^3 \right]$$

$$\text{Mix volume} = 1.00 + 0.50 + 3.87 + 6.11 + 4.01 = 15.49\ \text{cu ft}$$

$$\left[= 0.06 + 0.20 + 0.066 + 0.110 + 0.025 = 0.431\ \text{m}^3 \right]$$

(b) Excess water in sand = 640 × 0.05 = 32 lb

$$\left[= 1.75 \times 0.05 = 0.088\ \text{kg} \right]$$

Excess water in gravel = 1010 × 0.02 = 20 lb

$$\left[= 1.75 \times 0.02 = 0.035\ \text{kg} \right]$$

Total excess water = 32 + 20 = 52 lb

$$\left[= 0.088 + 0.035 = 0.123\ \text{kg} \right]$$

Field mix quantities:

$$\text{Water} = 250 - 52 = 198\ \text{lb}$$

$$\left[= 0.25 - 0.123 = 0.127\ \text{kg} \right]$$

$$\text{Sand} = 640 + 32 = 672\ \text{lb}$$

$$\left[= 1.75 + 0.088 = 1.838\ \text{kg} \right]$$

$$\text{Gravel} = 1010 + 20 = 1030\ \text{lb}$$

$$\left[= 1.75 + 0.035 = 1.785\ \text{kg} \right]$$

(c) Adjustment for batch mix.

$$\text{Cement} = 5.00 \times 94 = 470\ \text{lb}$$

$$\left[= 5.0 \times 42.6 = 213.0\ \text{kg} \right]$$

$$\text{Sand} = \frac{700}{1.00} \times 0.97 = 679\ \text{lb}$$

$$\left[= \frac{317}{1.00} \times 0.97 = 308\ \text{kg} \right]$$

$$\text{Cement} = \frac{[illegible]}{[illegible]} \times [illegible] = [illegible]$$

$$\left[= \frac{[illegible]}{[illegible]} \times [illegible] = [illegible] \right]$$

$$\text{Water} = \frac{[illegible]}{[illegible]} \times [illegible] = [illegible]$$

$$\left[\frac{[illegible]}{[illegible]} \times [illegible] = [illegible] \right]$$

$$\text{Mix volume} = \frac{[illegible]}{[illegible]} \times [illegible] = [illegible]$$

$$\left[= \frac{[illegible]}{[illegible]} \times [illegible] = [illegible] \right]$$

After mixing, which has been carried out, producer [illegible] calculation:

$$\text{Mix-water content (gal/ft}^3\text{)} = \frac{[illegible]}{V} \qquad (7\text{–}21)$$

$$\text{Mixer production (yd}^3\text{/h)} = \frac{[illegible]}{T} \qquad (7\text{–}22)$$

where V = [illegible]
T = [illegible]
A = [illegible]

Transporting and Handling Concrete

A number of different [illegible] equipment [illegible] available for transporting concrete from the mixer to its place of use. Some equipment commonly used includes [illegible] pumps, [illegible] buckets, drums, [illegible] and [illegible]. Special [illegible] are also available, [illegible] equipment [illegible] such as concrete [illegible].

Regardless of the equipment used, concrete [illegible] must be [illegible] the right [illegible]. The right [illegible] may be [illegible] to [illegible] or [illegible] [illegible] be used at the end of [illegible]. Other [illegible] equipment [illegible] may limit the [illegible] speed and maximum [illegible] distance that may be used. Temperature and [illegible] [illegible] [illegible]

7–3 PRODUCTION OF ASPHALT MIXES

Asphalt and Other Bituminous Materials

Bituminous materials include asphalt and tar. Although tar is not a bituminous material, it is included because it is a liquid, and tars are sometimes used. Some properties of petroleum asphalt are similar to those of coal tar, which is produced as a by-product of the manufacture of coke for steel production. Tar is not used as much as asphalt because the pavement industry is more interested in asphalt than in tar. Tar is used in small quantities—for example, in fog seals and tack coats and in surface treatments. A major disadvantage of tar is its tendency to oxidize and become brittle with age. Tar is also more toxic than asphalt. Tars, when used in road construction, are produced by mixing two or more tars to obtain a product with the desired properties. Tars, when used in road construction, are used in the same manner as asphalt. Tars are used in small quantities in the United States because of the small contribution they make to the total pavement. However, there are some regions where tar is used in substantial amounts. Since asphalt and tar are both viscous liquids, they are sometimes referred to as bituminous materials. Asphalt and tar are sometimes referred to as petroleum products.

Bitumen is a viscous liquid or near-solid form of petroleum used to coat the aggregate in asphalt mixtures to protect the aggregate from moisture. Bitumen is also used in other applications. Bituminous materials are referred to as flexible pavements, as opposed to concrete pavements, which are identified as rigid pavements. Bituminous mixtures are produced by mixing solid particles (aggregates) and a bituminous material. Some mixtures contain, in addition, mineral fillers such as the aggregate, particles less than 0.075 mm in size.

The aggregate in a bituminous mixture actually provides the strength and stability of the pavement. The aggregate consists of a mixture of coarse and fine aggregate. Coarse aggregate is defined as material retained on a 2.36-mm sieve, and fine aggregate is defined as material passing the 2.36-mm sieve. Material such as mineral filler, cement, or lime may be added to the aggregate to improve the properties of the mixture. Coarse aggregate can be gravel, crushed gravel, or crushed stone. Fine aggregate can be sand, crushed stone, or other material. Mineral filler is a finely divided material passing the 0.075-mm sieve. Material such as cement, lime, or other material may be added

Colorado. Some of the laboratories used equipment which is required to classify asphalt binder under the Performance Graded (PG) system include the following:

- The Rotational Viscometer which measures asphalt binder viscosity at high temperatures.
- The Dynamic Shear Rheometer which provides a measure of the resistance to deformation and fatigue cracking of asphalt binder at intermediate and high temperatures.
- The Bending Beam Rheometer which provides a measure of low temperature asphalt binder stiffness.
- The Rolling Thin Film Oven which simulates the short-term aging of asphalt binder during production and construction of the pavement.

Two other methods which are based on the original modified Marshall (MM) procedure, called the Hveem and Marshall methods, are used in the United States for mix design as well as for measuring the stability and stiffness of hot mix asphalt (HMA) mixtures. Both methods are based on the concept that the stability of the mix is a function of the internal friction and cohesion of the mix.

Asphalt cement, which is liquid at room temperature, is produced when petroleum distillates are mixed with asphalt cement. Asphalt emulsions are classified as medium-curing (MC), rapid-curing (RC), depending on the solvent used in the manufacture. Rapid-curing (RC) asphalt may be used to capture oils or may be modified by blending with petroleum products such as diesel oils. The modifier controls the rate of the cure. Viscosity grades range from 30 (relatively low viscosity) to 3000 (very viscous). Viscosity grades are based on the viscosity of the material.

Asphalt emulsions are prepared by mixing asphalt cement with water and an emulsifying agent. Asphalt emulsions are used in place of cutbacks because they can be applied to wet surfaces and do not release volatile organic compounds (VOC) to the atmosphere. Asphalt emulsions are classified as rapid-setting (RS), medium-setting (MS), or slow-setting (SS).

Road oils are designed for the special RT purpose of further reducing viscosity. Twelve grades are available, ranging from RT-0 (low viscosity) to RT-12 (very viscous). Two other grades, RTCE-5 and RTCE-6, are also available.

Handling Bituminous Materials

When asphalt cement or other bituminous materials are heated above the flash point, the flammable vapors of the liquid in the container are ignited by an open flame or other ignition source. The process of heating the material and the flammable vapors can take place in the liquid and in the vapor space. Some of the flammable vapors are released into the atmosphere and take the place of the liquid and, consequently, form a flammable mixture. Flammable vapors are released when the material is being heated and when the material is being poured into the kettle. Kettles and other equipment specifically designed for the purpose of heating bituminous materials are required. Kettles and other equipment should be kept in good condition and equipped with safety devices such as pressure gauges, temperature gauges, and safety valves. Thermostatic controls should be used to prevent burns when handling hot bituminous materials. Personal protective equipment should be used by workers during the handling of bituminous materials.

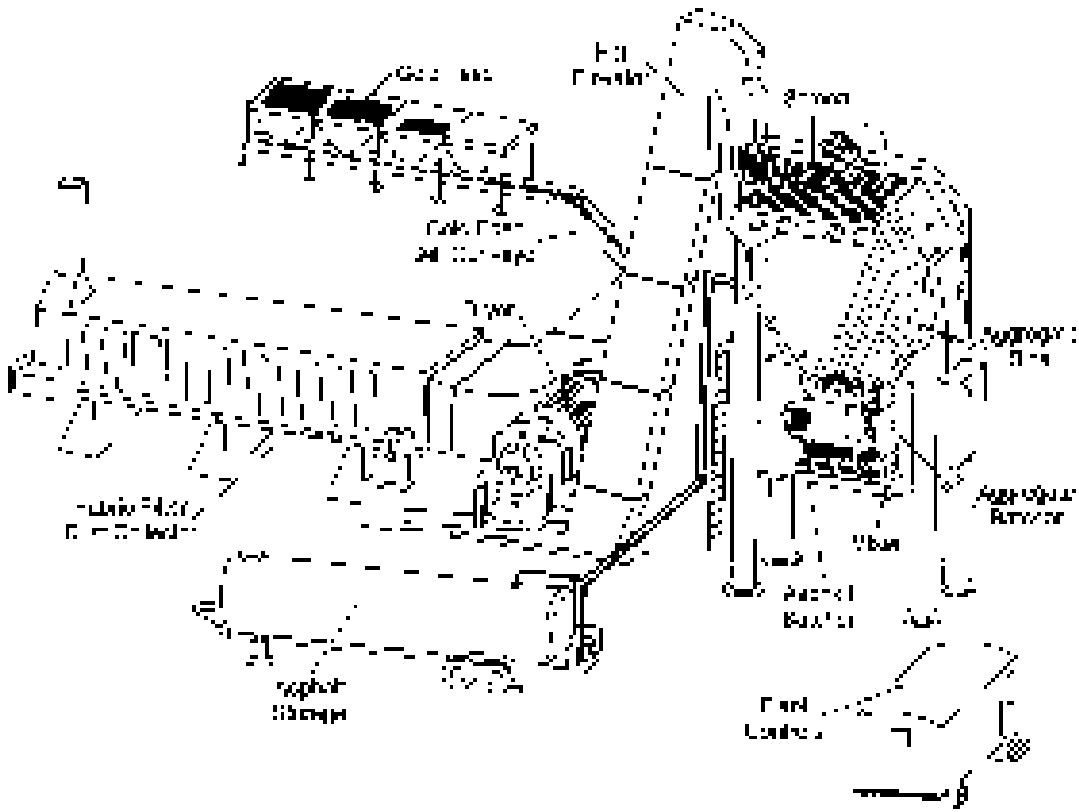

Figure 7-9 Asphalt batch plant.

Asphalt Plants

While small batches may be produced using asphalt emulsions or cutbacks, most hot mix asphalt plants are actually used to produce conventional asphalt (HMA) from a black cement. The principal types of asphalt plants are batch plants and drum mix plants. The basic process of [illegible] is to [illegible] and fuel hoppers and cold feed bins [illegible] aggregate from the hopper to the aggregate is [illegible] by a belt elevator [illegible] aggregate is [illegible] by screening and placed into [illegible] bins. Then the hot aggregate is [illegible] by weighing and placed into the mixer. Calibration tests provide a [illegible] of aggregate and cement [illegible] the original quantities of the asphalt cement. Asphalt is injected into the aggregate and the cement is [illegible] in the mixer. The basic batch mix operation is [illegible] and fuel [illegible].

[illegible] operation shown in Figure 7-[illegible] is [illegible] and has [illegible] continuous flow plant. As you see, both drying and mixing take place in the mixer. The process [illegible] aggregate [illegible] and [illegible] of the batch plant. The [illegible] by [illegible] because the asphalt cement [illegible] in the lines inside the mixer.

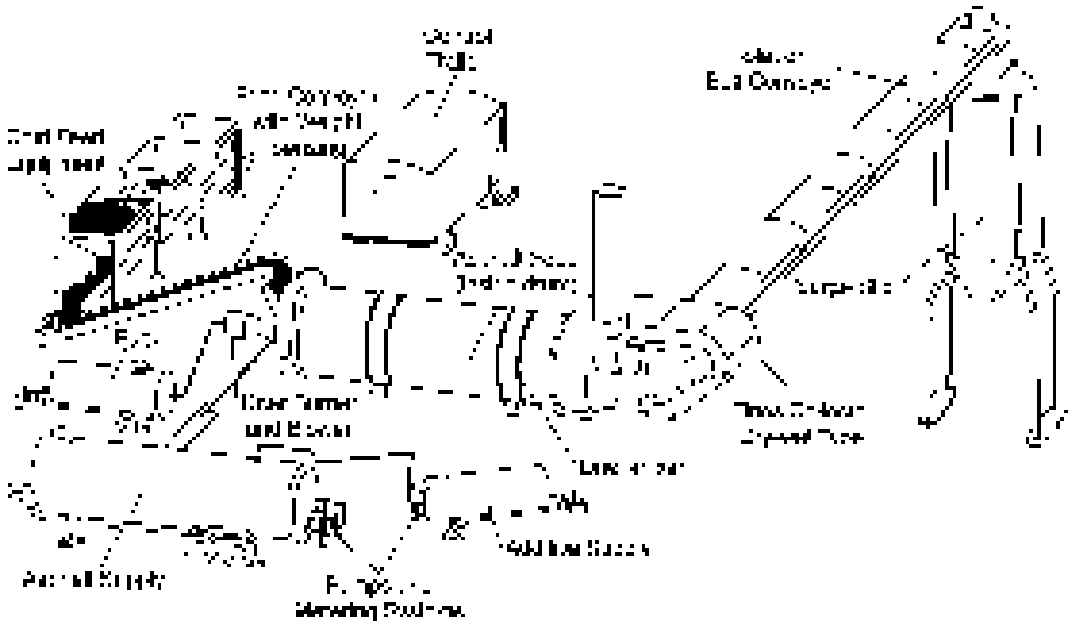

Figure 7-10 Components of a continuous asphalt mixer

This reduces the amount of pollution control equipment needed. Some recent innovations include mixer improvements and controllers. Controllers have led to increased mixer throughputs. The high mixing intensity, efficiency, accuracy, and portability of these plants make them attractive to asphalt producers.

Increased complexity and costs of asphalt plant mixers are worthwhile to ensure asphalt quality control. Troublesome storage mixers such as that shown in Figure 7-11 are unacceptable to some plant engineers because [illegible] capacity of mixers [illegible] mixing and storage time leads to stiffs and [illegible] degradation of the mix. Trucks should be clean and dry before loading. Incidents of loaded trucks [illegible] asphalt [illegible] are rare [illegible] to the job [illegible] equipment.

Estimating Asphalt Plant Production

An asphalt mix is composed of asphalt, and aggregate (gravel, crushed stone, and fine sand). The amount of asphalt in a mix is expressed as percentage of total mix weight. Aggregate is sized at the dryer, stored and heated prior to the hot asphalt. Since mixes are largely [illegible] the quality of material fills is [illegible] closely [illegible] along with the aggregate and not separately.

Dryer capacity, which depends on aggregate moisture content, is normally the controlling factor in asphalt plant capacity. Thus, the maximum hourly dryer capacity must be calculated taking into account the percentage of aggregate and fines in the mix. The procedure is illustrated in Example 7-6. Notice that [illegible] are based on dry

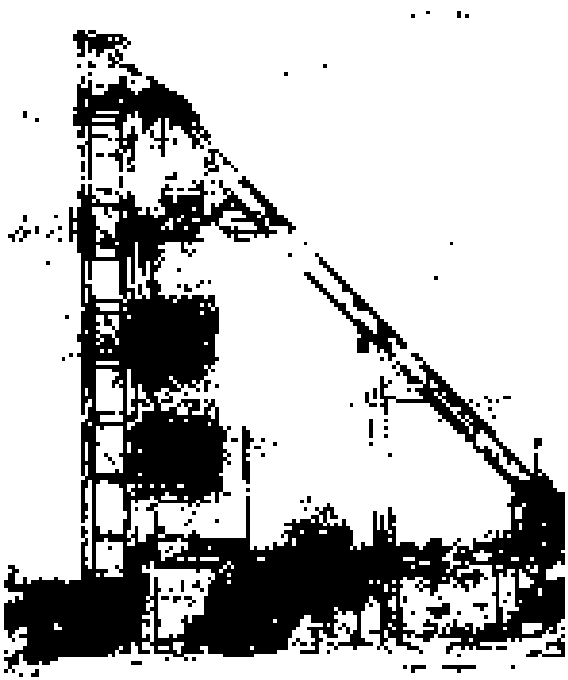

Figure 7-11 [illegible] hot mix asphalt storage [illegible] plant [illegible] steel building.

[illegible] aggregate weights. The weight of coarse aggregate and sand must be corrected to a moisture-free basis [illegible] field weight of [illegible] to feed the dryer. Aggregate moisture [illegible] graphed point calibration [illegible].

EXAMPLE 7-4

(a) Calculate the maximum theoretical specific gravity of an asphalt concrete based on the data in the following list.

(b) [illegible] the [illegible] specification.

Mix composition:

Asphalt	[illegible]
Aggregate composition:	
Coarse A	42%
Coarse B	[illegible]
Sand	[illegible]
Mineral filler	[illegible]
Aggregate volume	85
Dry aggregate at 85 [illegible]	[illegible]

SOLUTION

(a) Plant capacity = $\dfrac{\text{Dryer capacity} \times 10^3}{\text{Unit weight of mix (lb/yd}^3\text{)} \times \text{Dryer time (s)}}$

$$= \frac{110 \times 10^3}{(150) \times (0.200) \times 51} = 1{,}080 \text{ tons/h} \qquad (15.3)$$

(b) Proportion of mix:

Component	Fraction	Total	Rate
Asphalt	0.05	150.0	7.4
Aggregate (dry)	0.94	1,200.0	115.6
	1.00	1,350.0	1,200.0
Aggregate components (dry weight)			
Coarse A	0.40	115.6	10.0
Coarse B	0.35	115.6	40.5
Sand	0.15	115.6	20.8
Mineral filler	0.05	115.6	5.8
	1.00	115.6	115.6

PROBLEMS

1. What are the characteristics of a Portland cement concrete and asphalt binder?

2. Determine the fresh unit weight (kg/m³) of a concrete made with 400 kg/m³ of cement, 1,000 kg/m³ of coarse aggregate, 800 kg/m³ of sand, and 200 kg/m³ of water. The specific gravities of the cement, coarse aggregate, sand, and water are 3.15, 2.65, 2.65, and 1.00, respectively. The air content of the concrete is 2%. Assume that the specific gravity of the air is zero.

Component	Weight lb (kg)	Specific Gravity
Cement	94 (42.6)	3.15
Coarse	410 (186.0)	2.65
Sand	2[illegible] (1[illegible])	2.65
Water	54 (24.5)	1.00

3. Calculate the asphalt feed rate (tons per hour) for a continuous asphalt plant under the following conditions.

Asphalt content = 6%
Aggregate composition:
Coarse A = 35%
Coarse B = 20%
Sand = 24%
Mineral filler = 6%
Field moisture content of sand and sand = 4%
Drum capacity at optimal moisture content = 100 tons/h (22.7 kg/s)

4. Calculate the [illegible] required for an asphalt batch plant producing [illegible] (tons) per hour under [illegible] conditions.

Asphalt content	= 5%
Aggregate composition:	
Coarse A	= 45%
Coarse B	= 44%
Sand	= 15%
Mineral filler	= 3%

5. Using the computer program [illegible] calculate the percentage for an asphalt plant [illegible] maximum passing, [illegible] the [illegible] coarse [illegible], sand and fine aggregate, mineral filler and asphalt cement. For batch plants, compute the dry weight in [illegible] per batch for aggregates in mineral filler and asphalt cement. Input should include the aggregate composition, asphalt content, field moisture in sand and coarse aggregate, and the capacity in [illegible]. Since Problem 4 is using your program.

6. a. Determine the [illegible] of the sieve [illegible]

   b. Why [illegible] might result from [illegible] the maximum size of the mix or how might [illegible] be avoided?

7. Seven [illegible] for primary [illegible] and secondary [illegible] crushed [illegible] aggregate [illegible] the following [illegible] [illegible] per hour [illegible] and [illegible] percentage [illegible] the specified sieve [illegible].

Screen Size in. (mm)	Percent Passing
2 (64)	[illegible]
1 (25)	[illegible]
[illegible]	[illegible]

8. The output from a closed-circuit [illegible] is shown. Three decks horizontal vibrating screen is [illegible] to separate the aggregate output. The screen [illegible] 16 ft [illegible] 8 ft [illegible] to the 3/8 inch screen [illegible] smaller than [illegible] determine the [illegible] required for the [illegible] screen.

Screen Size in. (mm)	Screen Load tonnes (lb)	Passing tonnes (lb)
[illegible] (64)	[illegible] (79.8)	[illegible] (51.7)
[illegible] (38)	[illegible] (5.2)	[illegible] (0.1)
[illegible] (19)	[illegible] (38.8)	[illegible] (14.8)

9. A concrete mix that meets [illegible] requirements has the [illegible] shown. Determine the quantities of each ingredient by weight required to build a 156

[illegible] with [illegible] aggregate [illegible] aggregate is [illegible], surface dry, and allowed 10% overload.

Component	Weight lb	Weight kg	Specific Gravity
Cement	94	[illegible]	[illegible]
Gravel	365	165.2	2.65
Sand	[illegible]	[illegible]	2.65
Water	[illegible]	[illegible]	1.00

II. Developing mix proportions: [illegible] the [illegible] weight of each component. [illegible] concrete mix and mortar equation. Input data will include the [illegible] property [illegible] local materials, [illegible] proportions. [illegible] calculation. Input [illegible] SSD weight for the component, [illegible] and the field [illegible] moisture. Solve problem. Finding [illegible] proportions.

REFERENCES

1. [illegible] The Asphalt [illegible] Lexington, KY.
2. Asphalt Pavement [illegible] Lexington, KY.
3. [illegible] Concrete [illegible] Vol. II, 1992.
4. [illegible] Minneapolis, MN, 19[illegible].
5. [illegible] New York: American Society of Civil Engineers, [illegible].
6. [illegible] Chemical Equipment [illegible] Upper Saddle River, NJ: Prentice Hall, 200[illegible].
7. [illegible] Reference Book [illegible] Boston, [illegible].
8. [illegible] Construction [illegible] Lexington, KY.
9. [illegible] Specifications and Tables [illegible] Lexington, KY.

8

Paving and Surface Treatments

Pavements and surface treatments are used to provide a relatively wearing surface and to protect the underlying material from weather. Both concrete and asphalt pavements are used by secondary pavements. Pavements either positive or negative movement and flexible movements in contrast to movements prevent which are inherently rigid movements. Surface treatments on the other hand are produced by applying liquid asphalt or some other viscous material on a relatively stable base or soil. The choice of pavement and surface treatments is based on the following sections.

8-1 CONCRETE PAVING

Form-Riding Equipment

The frequently used concrete paving highways and airfields involved in the development of specialized concrete paving equipment. While it is true that the construction of pavements and surfacing increasingly involve complicated finishing operations to convert the plastic concrete which is placed into finished, [illegible] equipment is designed to deliver the concrete [illegible]. The equipment is called form-riding equipment. The pieces of equipment used to perform the operations of moving, placing, finishing, and curing are often mounted to a pavement, because they must travel on the finished pavement.

Powered mechanical vibrating [illegible] equipment [illegible] 20 to 30 cm in height. Metal pans driven into the ground along both sides of the road and the form and screed are [illegible] alternate. Form-riding screed is similar to the grade [illegible] described in Chapter 5 and [illegible] the pavement surface [illegible] process [illegible] Concrete is placed within the forms [illegible] or a back mixer. A hydraulic concrete spreader is used to spread [illegible] to distribute the concrete. Construction placement needs [illegible] equipment with conveyor belts and [illegible] to deliver rapidly [illegible] for moving [illegible] equipment.

Finishing follows screeding, floating, and troweling. Form riding equipment of the finishing machine and a longitudinal finisher. The transverse screed finisher is used to bring the surface to final grade and provide initial finishing. The longitudinal finisher provides final machine finishing. Some finishing machines follow, employing a transverse finishing bridge or screed which works across the entire surface of the pavement. Finishers may be followed by an immersion compacter equipped with a power spray for applying curing compound.

When constructing longitudinal joints, dowels or tie bars may be placed by dowelers, baskets, or other devices for longitudinal joints. Mechanical finishing may be supplied by transverse oscillating screed finishers, vibratory screens, or other types of finishers.

Slipform Paving

A slipform paver is capable of spreading, consolidating, and finishing concrete safe without the need of conventional forms. The concrete slips out behind the machine and is shaped by the mold boards in the paver, as shown in Figure 8–1. Since the paver has completely enclosed the pavement, which is finished, it may be stored ahead of the paver. Typical slipform pavers are capable of placing slabs up to 60 in (150 cm) thick and 24 ft (7.3 m) wide in a single

Figure 8–1 Large slipform paver in operation. (Courtesy of Texas Roadbuilder Group.)

Figure 8-2 Slipform pavers for curbs and gutters. (Courtesy of CONMAC Corporation.)

[illegible]

Small slipform pavers are used to place curb and gutter. Figure 8-2 is a commonly used for pavement curb and gutter. Some machines can be used in both directions, grade controls and power capacity allow for preparing the subgrade and placing the curb and gutter. Slipform pavers have a central core. Until the concrete is placed, the core is thoroughly [illegible] to prevent the concrete from adhering to the machine. Small slipform pavers are also used for the construction of pedestrian walks, bicycle paths, and small structures.

Concrete saws equipped with diamond or carbide blades are used to cut joints in pavements. Joints are made to control the location of cracks. The depth of the initial joint should be one-quarter of the slab thickness, but not less than the maximum size of the aggregate plus one inch. Sawing should be done when the concrete is still green but hard enough so that the joints do not ravel. This is usually in 12 to 24 hours after the concrete has been placed.

Roller Compacted Concrete

Roller compacted concrete (RCC) is a relatively new type of concrete mixture. It is used in a variety of ways, from the construction of concrete dams to use as a base for pavements

Figure 8-3 [illegible] power [illegible] (Reprinted Courtesy of Caterpillar Inc.)

[illegible] Basically [illegible] and spending [illegible] personal [illegible] or higher level [illegible] advantages [illegible] and mobility. In the case of [illegible] it has been [illegible] RCC [illegible] of [illegible] conventional concrete construction.

[illegible] construction, [illegible] RCC [illegible] RCC [illegible] heavy [illegible] surface [illegible] and [illegible] for [illegible] RCC [illegible] Section 8 [illegible] However [illegible] placed [illegible] the [illegible] placed [illegible] the ship and [illegible] between the [illegible] Before pouring [illegible] the edge of [illegible] should be [illegible] vertical [illegible] Comments [illegible] pouring [illegible] Colorado by [illegible] 1977

8-2 ASPHALT PAVING AND SURFACE TREATMENTS

[illegible] bituminous material (asphalt and tar) [illegible] [illegible] [illegible]

Table 8-1 Volume Correction Factor for Asphalt[1]

Temperature °F	°C	To Obtain Standard Volume, Multiply Measured Volume by:
60	16	1.0000
80	27	0.9841
100	38	0.9682
120	49	0.9523
140	60	0.9364
160	71	0.9205
180	82	0.9046
200	93	0.8888
220	104	0.8731
240	116	0.8574
260	127	0.8418
280	138	0.8262
300	149	0.8107
320	160	0.7953
340	171	0.7800

[1]Specific gravity assumed 1.000. Applicable to all grades of asphalt cement and liquid asphalt products. [illegible]

where S = total gallons (liters) of material
G = gallons per square yard (liters per square meter) of material
W = square yards (square meters) of surface
R = application rate in gallons per square yard (liters per square meter)

Bituminous Surface Treatments

Bituminous surface treatments are used in local streets and low-volume rural roads to provide a fresh wearing surface. A wide variety of bituminous surface treatments are available, including prime coats, tack coats, dust palliatives, and seals, such as chip seals, slurry seals, and multiple-layer surface treatments.

A prime coat is a coating of light bituminous material applied to a porous granular surface. The purpose of the prime coat is to seal the existing surface and to provide a bond between the existing surface and the new bituminous surface. Bituminous materials commonly used for prime coats include SS-1, RT-2, MC-30, EC-70, RC-250, MC-70, MC-250, RC-70, and SC-250. The normal rate of bituminous application varies from [illegible] gallons per square yard (0.45 to 2.25 liters per square meter) and is governed by the material, the surface texture, and the porosity of the surface.

A tack coat is a thin coating of light bituminous material applied to a previously paved surface to provide a bond between layers. Bituminous materials commonly used for tack coats include RC-70, RC-250, SS-1, CSS-1, RT-2, RT-3, RT-5, RT-8, and [illegible]. The normal rate of application varies

[illegible] gal/yd² (0.45 to 0.[illegible] L/m²). The tank contents are allowed to drain to a [illegible] condition before the [illegible] agent is placed.

A dry application [illegible] is a [illegible] surface treatment that [illegible] by [illegible] before and [illegible]. Emulsions that [illegible] are the [illegible] to penetrate and coat particles in the upper [illegible] and prevent [illegible]. Slow-[illegible] emulsions are [illegible] MS-2, MS-2h, MS-2P, and diluted [illegible] emulsions. [illegible] are [illegible] emulsions [illegible] magnesium chloride, calcium chloride, [illegible] and petroleum [illegible]. While [illegible] reflection [illegible] are [illegible] conditions [illegible] applied [illegible] accuracy. The [illegible] are [illegible] and [illegible] differences [illegible].

A dry application [illegible] is a slow setting, [illegible] emulsion [illegible] by [illegible] of water. [illegible] are [illegible] small [illegible] and [illegible] and [illegible] surfaces. The usual [illegible] is [illegible] gal/yd² ([illegible] L/m²).

A [illegible] slurry seal is composed of a mixture of slow-setting [illegible] emulsion, fine-aggregate material, filler, and water. Typical mixtures contain [illegible] percent asphalt emulsion, 30 to [illegible] percent fine aggregate, 1 to 15 percent mineral filler, and [illegible] percent water. The slurry is placed in a layer [illegible] in. (10 [illegible] mm) or more in thickness using [illegible] squeegees, squeegee [illegible], or [illegible] machines.

A [illegible] is composed of a light application of a medium-viscosity liquid asphalt covered with fine aggregate. Similar materials commonly used include [illegible] RT-9, RC-250, RC-800, MC-250, MC-800, RS-1, and SS-1. The rate of application varies from [illegible] gal/yd² ([illegible] L/m²) for fine aggregate to a typical rate of 10 to 15 gal/yd² (54 to [illegible] L/m²).

Single- and Multiple-Pass Surface Treatments

Single- and multiple-pass surface treatments are [illegible] applications of asphalt and aggregate. Aggregate surface treatments are used to [illegible] and to provide an [illegible] wearing surface. Such [illegible] are [illegible] because they require a minimum of time, equipment, and material. They are used [illegible] in stage construction, but [illegible] applications [illegible] are [illegible] to produce a higher-[illegible] surface.

A single-pass surface treatment is [illegible] by [illegible] a layer of asphalt and covering [illegible] aggregate. [illegible] are [illegible] of the finished surface is approximately equal to the [illegible] of the aggregate. A typical single-pass treatment consists of [illegible] 20 lb/yd² (9 to 15 kg/m²) of asphalt. The single-[illegible] application varies from 0.25 to 0.50 gal/yd² (1 to 2 L/m²) of asphalt. The [illegible] and quantity of binder selected will depend on ambient temperature, [illegible] of the surface, and aggregate size.

The [illegible] involved in placing a single-pass surface treatment are as follows:

1. Sweep the existing surface.
2. Apply the asphalt and allow it to [illegible].
3. Apply the aggregate at the specified rate.

1. Apply aggregate at the specified rate
2. Roll the surface
3. Seal the surface with a bituminous material

Rolling power is necessary to achieve adequate compaction, but it should be used in a way that does not damage the surface. Rollers should be applied with care so that the surface is not damaged. Specifications of aggregate must be followed immediately after initial application. Since bituminous surfaces are flexible, they are a suitable surface for use in areas of high rainfall. The material must be made to apply aggregate within 2 min after initial application. Major types of aggregate spreaders, including chip spreaders, gravity spreaders, flight spreaders, and self-propelled spreaders, are used in conjunction with asphalt trucks. Spreaders must be capable of applying aggregate at a specified rate. After the application of aggregate, the surface must be rolled to embed the aggregate in the bituminous material. Rollers of various types and weights may be used for compaction, but pneumatic rollers are preferred because they provide a kneading action and distribute pressure uniformly. Compaction equipment should be capable of operating at a speed that is sufficiently slow to prevent displacement of the aggregate by the roller.

Multiple pass surface treatments consist of two or more single surface treatments applied in succession. The construction sequence is identical to that of the single surface treatment, except that it is repeated twice. This type of surface treatment consists of three bituminous layers, a wide variety of bituminous materials, and three bituminous agents, and so on. The maximum size of aggregate used in each successive layer should be about one-half the size used in the underlying layer.

Asphalt Paving

The most widely used chemical stabilizers include petroleum products, such as asphalt, and various types of tars. Asphalt is used in a variety of forms, including liquid, emulsified, and cutback. Paving materials, such as asphalt, are used for various purposes, including surface treatments, bituminous pavements, and prime coats. Additives are employed primarily to improve adhesion, reduce brittleness, and improve workability.

Bituminous pavements which are usually classified as flexible pavements are constructed using various materials and procedures. Very specific requirements are employed in the construction of specific surface treatments. Some of the materials may be used in a variety of pavement. For example, a bituminous macadam may be used as a base course, as a binder course, or as a surface course, depending on the specifications. This pavement can be improved and strengthened by adding a wearing course of sand-asphalt mixture. It is used as a base course for medium-duty or light application of an intermediate wearing course. Coarse aggregate is the primary component of the pavement, and the voids are filled with finer aggregate. The pavement is then rolled and compacted. The surface is swept and compacted, and the finer aggregate is spread over the surface. A coarse application of finer aggregate is then applied to the surface by spreaders

[illegible]

Hot and Cold-Mix Asphalt Paving

[illegible]

[illegible]

Figure 8.5 Asphalt paving machine in operation. (Courtesy of Caterpillar, Inc.)

[illegible]

Compacting or rolling of the mix should begin immediately after it is placed by the paver. The usual sequence of rolling involves breakdown rolling (initial rolling), intermediate rolling, and finish rolling. Vibratory steel-wheel rollers are now commonly used for initial compaction as shown in Figure 8.6. Details [illegible] pavement is placed behind the paver, under some circumstances it is rolled, [illegible] wheel is vibratory rollers are commonly used for breakdown rolling. Steel-wheel rollers have [illegible] in place [illegible] rolling. In general, [illegible] intermediate rolling [illegible] rollers, rubber-tire rollers, and steel-wheel rollers. Finish rolling [illegible] steel-wheel rollers are commonly used for finish rolling. [illegible] vibratory rollers are increasingly being employed for all phases of rolling.

The temperature of the asphalt mix can be [illegible] with [illegible] rolling [illegible] is the [illegible] required for initial compaction.

[illegible] pavement. Rapid measurement of pavement density can be made with a nuclear density device [illegible] equipment [illegible] measuring system [illegible]

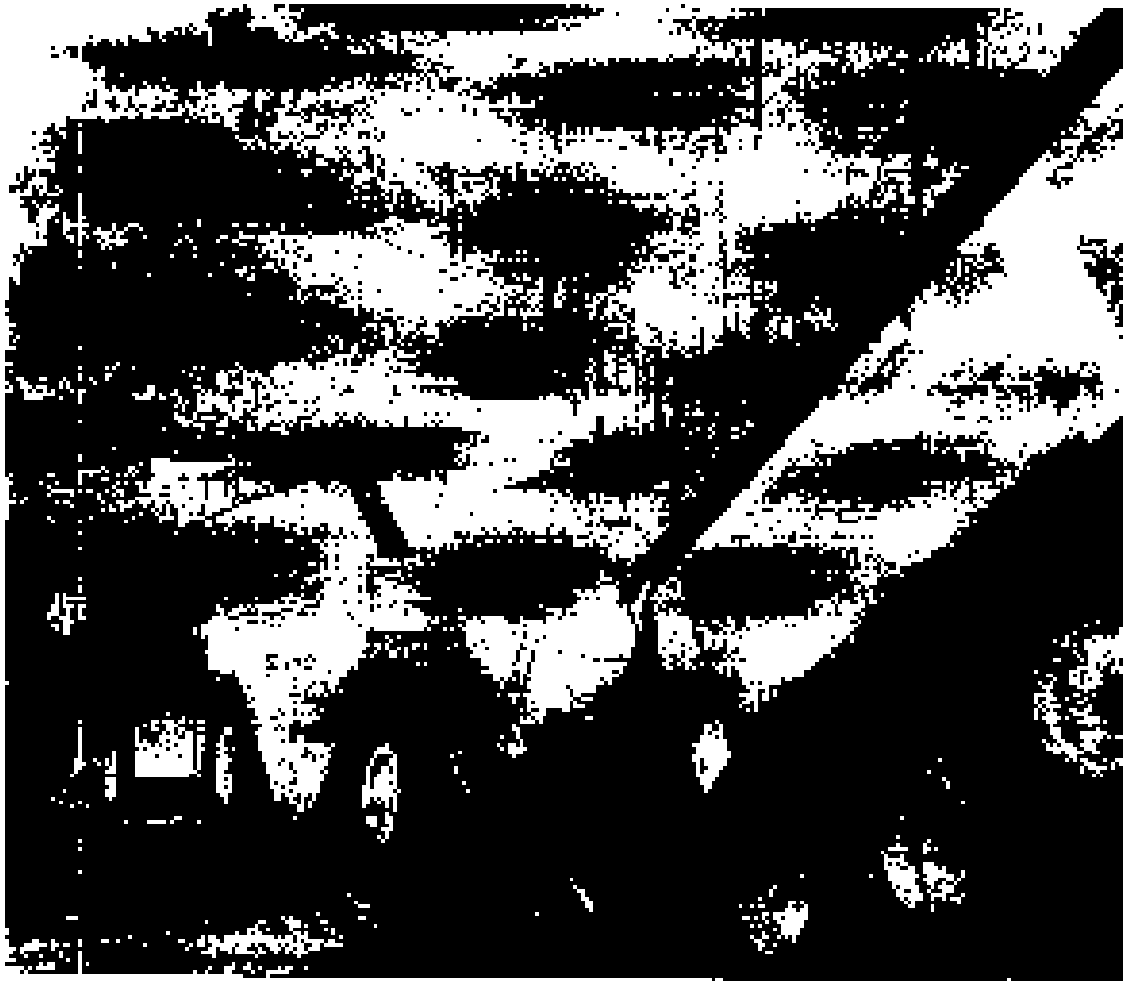

Figure 3-6 Material transfer vehicle feeding an asphalt [illegible] (courtesy of [illegible])

[illegible] in Section 2 [illegible] Many [illegible] flow [illegible] measure the temperature of the [illegible] pavement [illegible] milling [illegible] time [illegible]

Before milling operations [illegible] specifically [illegible] conditions [illegible] more [illegible] checked during milling, including the frequency of [illegible] surface [illegible] the [illegible] milling [illegible] procedures, [illegible] and edges.

Superpave™

Concerns about premature failure of asphalt pavements made [illegible] the development of the Superpave binder specification. The Congress [illegible] Strategic Highway Research Program (SHRP). Focus areas [illegible] the pavement [illegible] process.

Figure 8–7 Hot mix asphalt storage silos. (Courtesy of Terex Roadbuilding)

Figure 8–8 Rolling an asphalt pavement with a heavy roller. (Courtesy of BOMAG USA)

[illegible]

8–3 PAVEMENT REPAIR AND REHABILITATION

[illegible]

the old material. Rubblization and pulverization may also ensure that subgrade or base material is stabilized by soil stabilization or drainage improvements. Rubblization involves complete removal of the old pavement and the subsequent use of a crack and seat process.

Study management systems are also being developed to improve bridge decks and other costly structures by extending their lifetimes. Bridge decks often deteriorate or become structurally unsound as a result of the corrosion of the concrete reinforcing steel, due to salt penetration into the structure. The use of epoxy-coated reinforcing steel, chemical sealing of the pavement surface, and the use of chemical additives in the concrete mix all show promise in preventing deterioration of bridge decks.

The need to repair or rehabilitate highway pavements usually results in the closure of one or more lanes. Since the cost of traffic delays often exceeds the actual cost of repair, increased interest is being paid to the use of rapid hardening materials which permit the repaired lanes to be opened to traffic within a few hours instead of several days. To meet this demand, a number of rapid hardening materials are currently being developed, with hardening accurate. Some of these materials exhibit compressive strength as great as 8,000 psi (55,165 kPa) within 2 hours. Asphalt pavements repaired with fast-setting materials can be reopened to traffic as soon as the mix is cooled sufficiently so that it does not rut under traffic.

While work zones on the pavement are necessary, traffic must be maintained during highway repair. In such cases, increasing attention is being paid to highway safety and the Occupational Safety and Health Administration (OSHA). See Chapter 19 for additional information on construction safety.

Recycling of Pavements

In recent years there has been a significant increase in the recycling of pavements. Recycling consists of the incorporation of old pavement, materials of the pavement material, and resurfacing with asphalt concrete mixes. Additionally, recycling saves energy and conserves resources. Additionally, recycling reduces the volume of waste which must go into landfills or other disposal sites.

Old concrete pavements are commonly broken up by pneumatic hammers and hoisted out by cranes, resulting in a jagged rubble. Flame cutting tools are used and the concrete recycled for use as aggregate.

Asphalt pavements are most commonly milled, cold planed, or pulverized as shown in Figure 8-7 and 8-8, and hauled to a processing and recycling plant. A portable asphalt recycling plant is shown in Figure 8-10.

The new Federal specification for the use of recycled asphalt pavement (RAP) in hot mix asphalt (HMA) pavements sets a value of 20% for the maximum RAP content allowed in the following list.

Maximum allowable RAP content:

Base course:	15 x 10⁶
Binder course:	15 x 10⁶

Figure 8-9 Pavement profiler removing old asphalt pavement. (Courtesy of Cleveland Cross Corporation.)

Surface course	Nominal 50 mm
Maximum size of RAP	1 to 2 in. (25–51 mm)
Average blended stockpile of RAP	[illegible]
Recycling agent allowed:	
Asphalt cement only	all states
AC plus additives	some states

Another way to wash old asphalt pavement is shown in Figure 8-10. Here, old asphalt is removed by a planer mixed with a rejuvenating agent and deposited in windrows ready for utilization as a cold-mix pavement.

Mixing cold pulverized milling or planing material in place only requires proper proportioning, application of the rejuvenating agent, and compaction. This provides a smooth, sound base for the placement of a new surface course.

Figure 8-10 Portable recycled asphalt crushing plant (Courtesy of Astec Industries, Inc., and Johnson Crushers International)

Figure 8-11 Traveling asphalt recycling plant (Courtesy of Cedarapids, Inc.)

PROBLEMS

1. Find the asphalt application rate required if a volume of [illegible] gal (gallons) [illegible] 700 gal (2650 L), asphalt temperature was 300°F (149°C), [illegible] length was 45 m (15 m), and the length of road section sprayed was 10 m (30 m).
2. Why has asphalt been [illegible] highly [illegible] asphalt [illegible] [illegible] work in recent years?
3. Five classes of [illegible] power [illegible] [illegible] of [illegible]?
4. Identify [illegible] temperature [illegible] [illegible] TDS [illegible] [illegible] problem, like you [illegible]
5. Find the [illegible] distributor [illegible] applied [illegible] 0.2 gal/yd² (1.1 L/m²), when the spray bar [illegible] 10 ft (3 m), and road speed is 150 ft/min (1.137 m/min).
6. Briefly [illegible] [illegible] TDS [illegible] pavement.
7. What [illegible] available for [illegible] [illegible] TDS pavement?
8. Describe the [illegible] in the [illegible] pavement. What are the principal advantages and disadvantages of [illegible]?
9. Explain [illegible] [illegible]
10. [illegible] determine the [illegible] of [illegible] [illegible] after [illegible] the spray bar [illegible] road was [illegible]

REFERENCES

1. AASHTO Guidelines [illegible] Association of State Highway and Transportation Officials, Washington, D.C., 1993.
2. [illegible] Asphalt Institute, Lexington, KY.
3. [illegible] Asphalt Institute, Lexington, KY.
4. [illegible] Asphalt Institute, Lexington, KY.
5. [illegible] Asphalt Institute, Lexington, KY.
6. [illegible] Asphalt Institute, Lexington, KY.
7. [illegible] Asphalt Institute, Lexington, KY.
8. [illegible] Asphalt Institute, Lexington, KY.
9. [illegible] Asphalt Institute, Lexington, KY.
10. [illegible] Asphalt Institute, Lexington, KY.

11. [illegible] Wilson, O. [illegible], Sally [illegible] Cooperative Corporation, [illegible], 1991.
12. [illegible] Cooperative Corporation, Atlanta, Georgia, [illegible], 1999.
13. Donnelly, S. W. Georgia Cooperative Extension, Rural Cross Sales Office, [illegible] [illegible].
14. [illegible] Cooperative Corporation, New York: American Management [illegible], 1994.
15. [illegible] Cooperative Corporation, Washington: National Agricultural Cooperative Association, [illegible].
16. [illegible] [illegible] Cooperative Corporation, [illegible] [illegible].

9

Compressed Air and Water Systems

9–1 INTRODUCTION

Construction Applications

Compressed air is [illegible] power source for construction [illegible] and [illegible]. While hydraulic power is [illegible] compressed air [illegible] power [illegible] drills. Compressed air is still required for [illegible] out the drill hole [illegible] by a hydraulic [illegible]. Some of the other [illegible] for compressed air [illegible] sandblasting, spraying, [illegible] gasoline [illegible], conveying cement, pumping water and operating pneumatic tools. Compressed air [illegible] tools include spades for [illegible], [illegible] and [illegible] provide [illegible] power [illegible] conditioning [illegible], [illegible], and [illegible] pumps, boilers, [illegible], and [illegible].

Temporary water supply systems [illegible] are [illegible] temporary [illegible] water supply [illegible] for [illegible], [illegible] for [illegible], [illegible] and for [illegible].

Construction Manager's Responsibilities

The construction manager must be able to select the appropriate type and [illegible] air compressor plant. In [illegible] compressor [illegible] associated air [illegible] supply system. Sections 9–2 and 9–3 provide guidelines in performing these tasks.

9–2 COMPRESSED AIR SYSTEMS

Types of Compressors

Air compressors may be classified as positive displacement [illegible] or dynamic compressors according to the [illegible] by which they compress air. Positive compressors

compressor efficiency improved by reducing the air-flow rate within a confined space. Positive displacement compressor types include reciprocating compressors, rotary vane compressors, diaphragm and screw compressors. Dynamic compressors achieve air pressure by using powerful impellers to increase air velocity and momentum. The principal type of dynamic air compressor used in industry is the centrifugal compressor. Rotary compressors, such as positive displacement and dynamic, are smaller, lighter and quieter than reciprocating compressors of similar capacity and pressure, but compressors use in continuous duty are very expensive.

A schematic diagram of a typical vane air compressor system is shown in Figure 9-1. This compressor is close-coupled to a [illegible] belt-driven [illegible] and is equipped with an aftercooler, a receiver and a [illegible] to remove moisture from the output air. The unit is thus packaged for reduced size. The cooler of the compressor is [illegible] by an air-to-air [illegible] to increase the efficiency of the [illegible] compressor. The receiver serves as a compressed air reservoir, provides a [illegible] and serves as a [illegible] to remove moisture from the compressed air. [illegible] can [illegible] quite [illegible] without [illegible] in the system.

The passage of operation of a single vane rotary compressor is shown in Figure 9-2. [illegible] the vane [illegible] contact with the cylinder. [illegible] with the [illegible] of the [illegible] between [illegible] increasing, creating a partial vacuum. As rotation continues, the volume of air in the space between adjacent vanes decreases, causing the compressed air. The compressed air is sucked out of the cylinder [illegible] the volume [illegible] is [illegible].

Compressors of [illegible] are [illegible] stationary [illegible]. Although portable units are [illegible] used in construction work, [illegible] compressors may be employed in [illegible] similar permanent installations. Portable units are available in capacities from 75 to over 2000 cubic [illegible] (2.1 to 56.6 m³/min). Figure 9-3 shows a small portable air compressor being used to power two pneumatic paving breakers. Since pneumatic tools normally require air at 90 psig (6 kg/cm²) [illegible] pressure to the pressure range of 90 to 100 psig (620 to 690 kPa).

Another [illegible] rotary screw air compressor is [illegible] (see Figure 9-4). The [illegible] is driven by the power source. The rotating gate [illegible] is [illegible] by the [illegible] of the main [illegible] driven directly by the [illegible]. The principle of operation is as follows. A [illegible] is created when the [illegible] is large as the [illegible] of the [illegible] and [illegible] the [illegible] and discharge port. The [illegible] volume decreases as the [illegible] and [illegible] the compressed air is [illegible]. The self-contained rotary screw compressor is [illegible] very [illegible] and [illegible] and long life.

Required Compressor Capacity

Air compressor ratings are based on the volume of "standard" air or "free" air at standard conditions when the compressor will deliver at specified [illegible] pressure

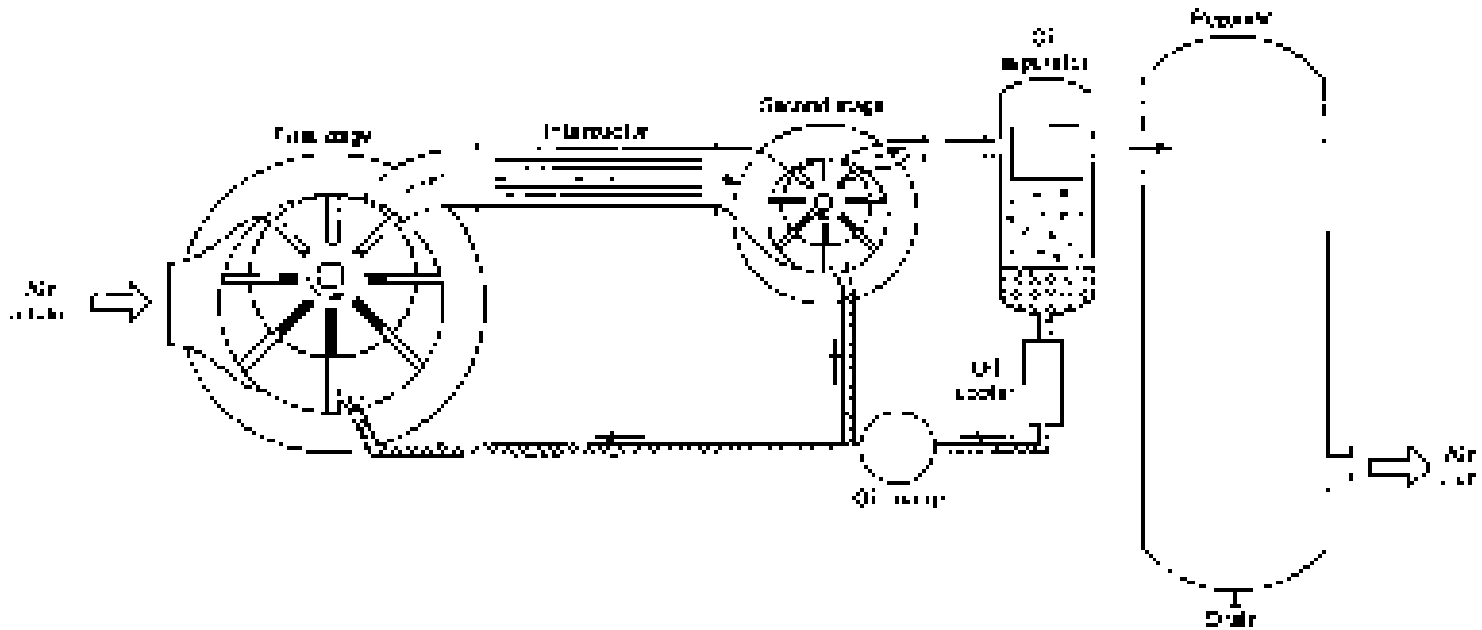

Figure 9.1 Schematic of sliding vane rotary air compressor

Figure 9-2 Small portable air compressor powering pneumatic tools. (Courtesy of Ingersoll-Rand Company)

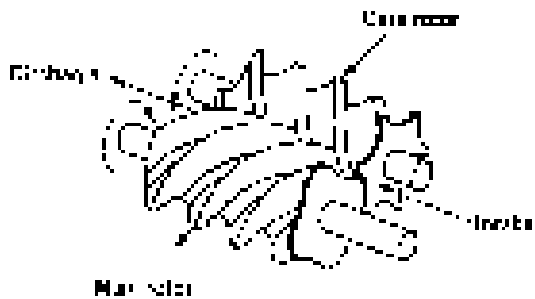

Figure 9-3 Rotary screw air compressor

Standard air is defined as air at a temperature of 70°F (21°C), a pressure of 14.7 psia (101 kPa) [illegible] (100 kPa absolute), and 36% relative humidity. Since atmospheric conditions at a construction site rarely correspond to these standard conditions, it may be necessary to adjust the rated compressor capacity to the prevailing conditions. Based on [illegible] altitudes above sea level, altitude has the most pronounced effect on compressor capacity. A general rule of thumb is that [illegible] above sea level [illegible] a 3% [illegible] in capacity.

[illegible] required to supply a source of air [illegible] consuming up the air demand of all individual tools and equipment. Recommended air compressor values for various pneumatic construction equipment are given in Table 9-1. [illegible] type will [illegible] operate simultaneously, [illegible] load factor and [illegible] be adjusted [illegible] for each type of tool. Table 9-1 provides suggested values of the load factor to use for

Table 9-1 Representative air consumption values of pneumatic construction equipment

Type of Equipment	Size	Air Consumption	
		cu ft/min	m³/min
Hammer	[illegible]	[illegible]	[illegible]
	45 lb class	[illegible]	[illegible]
	60 lb class	[illegible]	2.3–3.1
Drill on wagon	Light (8½ in. bore)	[illegible]	[illegible]
	Medium (10–11 in. bore)	[illegible]	[illegible]
	Heavy (13 in. bore)	[illegible]	[illegible]
Jack	Medium-weight	600–1000	17.0–28.3
	Heavy-weight	[illegible]	[illegible]
Rotary spreader		[illegible]	[illegible]
Paving breaker		[illegible]	[illegible]
Compaction hammer	Low head	[illegible]	[illegible]
	High head	[illegible]	[illegible]
Sandblasting		[illegible]	[illegible]
Standard-efficiency nozzle		[illegible]	[illegible]
Tungsten carbide		[illegible]	[illegible]

Table 9-2 Suggested values of tool factor factor for pneumatic construction tools

Number of Tools of Same Type	Diversity Factor
[illegible]	[illegible]
[illegible]	[illegible]
[illegible]	[illegible]
[illegible]	[illegible]
[illegible]	[illegible]
[illegible]	[illegible]

[illegible] number of tools of the same type. Where [illegible] and different types of tools or equipment [illegible] apply a second or [illegible] factor [illegible] the different types of tools. [illegible] that [illegible] probability that [illegible] types of tools will [illegible] simultaneously. Finally, an allowance should be made for leakage in the compressed air system. [illegible] 10% in the estimated air demand to allow for leakage.

Table 9-3 Air compressor altitude adjustment factors

Altitude		Adjustment Factor
ft	m	
1,000	305	1.02
2,000	610	1.06
3,000	915	1.10
4,000	1220	1.14
5,000	1525	1.17
6,000	1830	1.21
7,000	2135	1.25
8,000	2440	1.30
9,000	2745	1.34
10,000	3050	1.39
11,000	3355	1.44
12,000	3660	1.49
13,000	3965	1.55
14,000	4270	1.61
15,000	4575	1.67

After the total air consumption including leakage has been determined, the adjustment factor must be applied for altitude before selecting the machine or machines size of air compressor required to supply the system. The actual adjustment factor may be calculated as the ratio of the compression at the specified altitude to the compression at sea level. These adjustment factors are listed in Table 9-3.

The procedure for determining the total capacity of the air compressor required for a project is illustrated in Example 9-1.

EXAMPLE 9-1

Determine the rated capacity of an air compressor required to operate the following tools at a total altitude of 4000 ft (1220 m). Assume a 30% leakage and an altitude adjustment factor of 0.86.

Item	Rated Consumption		Number
	cu ft/min	m³/min	
Drill hammers	215	6.1	2
Hand-held drills	90	2.5	6
Impact wrenches	30	0.8	4
Tampers	40	1.1	5
Sandblasting equipment	80	2.3	2

SOLUTION

[illegible]

Item	Fixture Consumption	
	[illegible]	[illegible]
[illegible]	[illegible]	[illegible]
Hose bibb [illegible]	[illegible]	[illegible]
[illegible]	[illegible]	[illegible]
[illegible]	[illegible]	[illegible]
Pumps	[illegible]	[illegible]
	[illegible]	[illegible]

Applying the [illegible] factor,

[illegible] = [illegible]

[illegible] = [illegible]

[illegible] = [illegible]

[illegible] = [illegible]

[illegible] = [illegible]

Friction Losses in Supply Systems

[illegible]

[illegible]

[illegible]

[illegible]

Table 9.4 Pressure cross caused by pipe friction. [illegible]

Flow		Nominal Diameter (in. [cm])					
		3/4	1	1	1½	2½	4
m³/min	m³/min	[illegible]	[illegible]	[illegible]	[illegible]	[illegible]	[illegible]
10	0.2	[illegible]	[illegible]	[illegible]	[illegible]		
20	0.3	[illegible]	[illegible]	[illegible]	[illegible]	[illegible]	
30	0.4	[illegible]	[illegible]	[illegible]	[illegible]	[illegible]	
40	[illegible]		[illegible]	[illegible]	[illegible]	[illegible]	
50	[illegible]		[illegible]	[illegible]	[illegible]	[illegible]	[illegible]
60	[illegible]		[illegible]	[illegible]	[illegible]	[illegible]	[illegible]
70	[illegible]		[illegible]	[illegible]	[illegible]	[illegible]	[illegible]
80	[illegible]		[illegible]	[illegible]	[illegible]	[illegible]	[illegible]
90	[illegible]		[illegible]	[illegible]	[illegible]	[illegible]	[illegible]
100	[illegible]			[illegible]	[illegible]	[illegible]	[illegible]
125	[illegible]			[illegible]	[illegible]	[illegible]	[illegible]
150	[illegible]			[illegible]	[illegible]	[illegible]	[illegible]
175	[illegible]				[illegible]	[illegible]	[illegible]
200	[illegible]				[illegible]	[illegible]	[illegible]
250	[illegible]				[illegible]	[illegible]	[illegible]
[illegible]

Table 9.4 (Continued)

	Nominal Diameter (in. (cm))							
[illegible] (9.0)	2 (7.6)	3 (10.2)	4 (12.7)	6 (15.2)	8 (20.3)	10 (25.4)	12 (30.5)
[illegible]							
[illegible]							
[illegible]							
[illegible]							
[illegible]							
[illegible]	[illegible]						
[illegible]	[illegible]						
[illegible]	[illegible]						
[illegible]	[illegible]						
[illegible]	[illegible]						
[illegible]	[illegible]	[illegible]					
[illegible]	[illegible]	[illegible]					
[illegible]	[illegible]	[illegible]					
[illegible]	[illegible]	[illegible]					
[illegible]	[illegible]	[illegible]					
[illegible]	[illegible]	[illegible]	[illegible]				
[illegible]	[illegible]	[illegible]	[illegible]				
[illegible]	[illegible]	[illegible]	[illegible]				
[illegible]	[illegible]	[illegible]	[illegible]				
[illegible]	[illegible]	[illegible]	[illegible]	[illegible]			
[illegible]	[illegible]	[illegible]	[illegible]	[illegible]	[illegible]		
[illegible]	[illegible]	[illegible]	[illegible]	[illegible]	[illegible]	[illegible]	
[illegible]	[illegible]	[illegible]	[illegible]	[illegible]	[illegible]	[illegible]	[illegible]
[illegible]	[illegible]	[illegible]	[illegible]	[illegible]	[illegible]	[illegible]	[illegible]
[illegible]	[illegible]	[illegible]	[illegible]	[illegible]	[illegible]	[illegible]	[illegible]
[illegible]	[illegible]	[illegible]	[illegible]	[illegible]	[illegible]	[illegible]	[illegible]

Table 9–5 Correction Factors for Friction Losses

Inlet Pressure		
psig	kPa gauge	Correction Factor
40	276	1.210
60	414	0.900
80	552	[illegible]
100	690	0.630
120	827	0.552
140	965	0.490

EXAMPLE 9–2

The compressed air system shown in Figure 9–6 is being operated with a [illegible] gauge of 100 psig (689 kPa). Pressure drop in the interconnecting piping is limited to 2 psig. [illegible] of all the [illegible] equivalent lengths, what is the possible [illegible]? Assume [illegible] gage.

SOLUTION

Equivalent length of [illegible] (Figure 9–4):

$$\text{2 plug valves at 30 ft} = 1\,[illegible]\ \text{ft}\ (\text{[illegible] m})$$

$$\text{[illegible] at 8 ft} = [illegible]\ \text{ft}\ (2.4\ \text{m})$$

$$[illegible]\ (\text{[illegible] m})$$

$$\text{Equivalent pipe length} = [illegible] + [illegible] = [illegible]\ \text{ft}$$

$$[illegible] = 314.5 - 54.2 = [illegible]\ \text{m}$$

$$\text{Total flow} = 3 \times [illegible] = [illegible]\ \text{cu ft/min}\ ([illegible]\ \text{m}^3/\text{min})$$

$$\text{Pressure drop per 100 ft (30.5 m)} = 1.9\ \text{psig}\ ([illegible]\ \text{kPa})\quad (\text{Table 9–3})$$

$$\text{Correction factor} = 0.92\quad (\text{Table 9–5})$$

Pressure loss in pipe and fittings is

$$\Delta p = \frac{[illegible]}{100} \times 1.9 \times 0.92 = 2.1\ [illegible]$$

$$= \frac{[illegible]}{305} \times 13.1 \times 0.92 = 14.4\ \text{kPa}$$

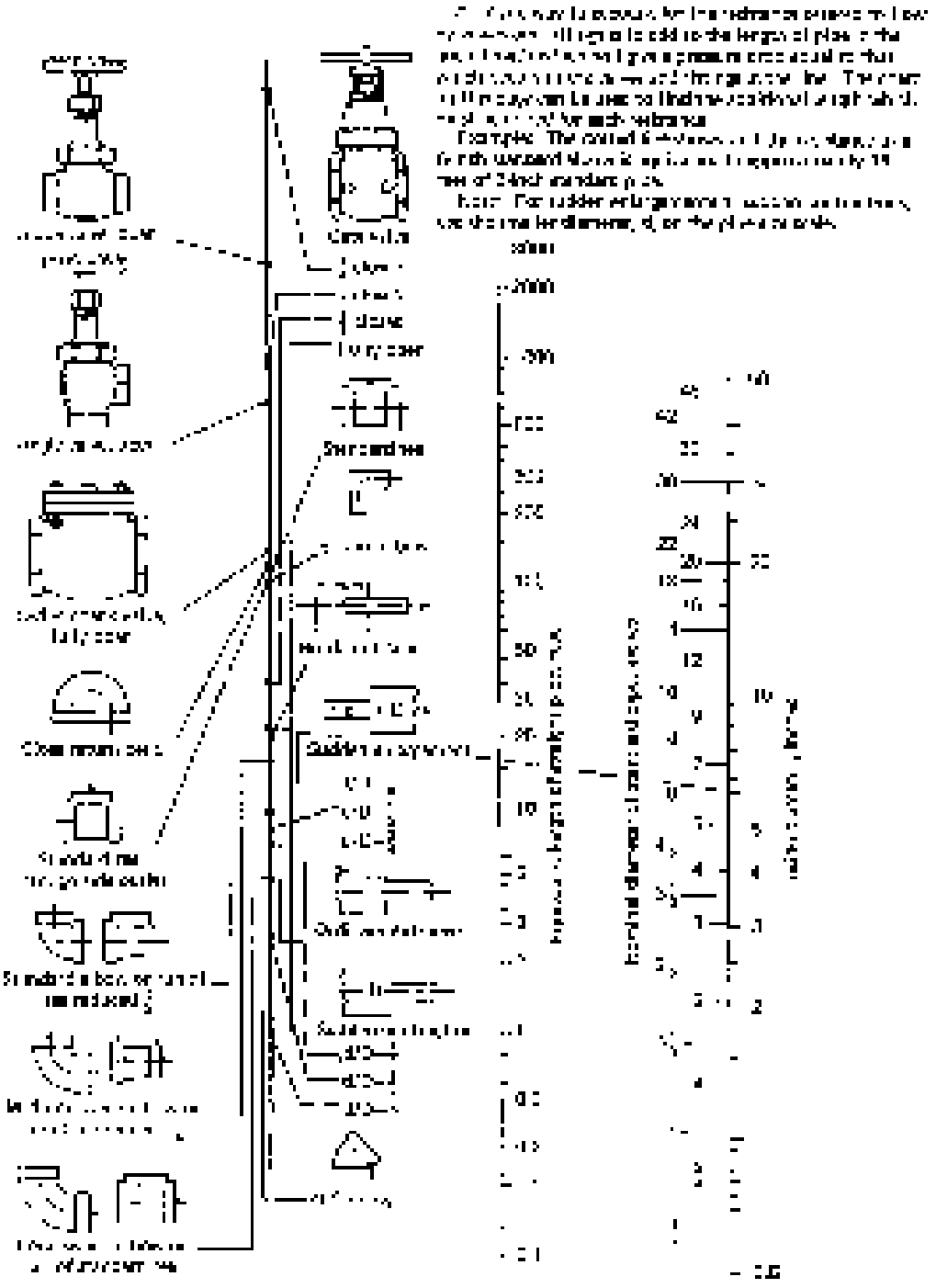

Figure 9-4 Resistance of valves and fittings to flow. (Source: Skinner, Fluid Flow Nomograph appearing in "Cost Action & Power Nomograph," Copyright © Crane Company, by permission.)

Table 9-6 Pressure drop (psi) per 50 ft (15.3 m) of hose (Data from Table 10.27, Compressed Air and Gas Handbook, 4th ed., John F. Roll [ed.]. Courtesy of Compressed Air and Gas Institute, New York, 1973)

	Flow	Hose Size [in. (cm)]				
cu ft/min	m³/min	½ (1.3)	¾ (1.9)	1 (2.5)	1½ (3.8)	2 (5.0)
25	0.6	3 (19)				
30	0.8	4.0 (28)				
40	1.1	6.2 (43)	1.0 (6.9)			
50	1.4	10.4 (72)	1.[illegible] (8.7)			
60	1.7		[illegible]			
70	[illegible]		3.5 (24)			
100	2.8		5.2 (35)	1.2 (8.3)		
125	3.5		7.[illegible] (51)	1.8 (12)		
150	4.2		9.9 (68)	2.4 (17)		
175	4.9		12.7 (88)	3.[illegible] (21)		
200	5.7			3.8 (26)		
250	7.1			5.5 (38)	1.3 (12)	
300	8.5			6.6 (46)	1.9 (15)	
350	9.9			7.8 (54)	2.4 (17)	
400	11.3			9.9 (68)	2.4 (22)	1.4 (9.7)
450	12.7			12.8 (88)	4.2 (31)	1.8 (12)
500	14.2				5.1 (40)	2.2 (15)
550	15.6				6.0 (50)	3.0 (21)
600	17.0				8.0 (51)	3.7 (25)
650					10.7 (74)	4.[illegible] (30)
700					12.6 (87)	5.2 (36)

*Pressure drop psi (kPa) per 50 ft (15.3 m) hose at 100 psig (690 kPa)

Pressure at hose outlet (P_2):

$$P_2 = 110 - (5.1 + 1.4) = 103.7 \text{ psig}$$

$$[= 758 - (34.2 + 12.6) = 711 \text{ kPa}]$$

Assume pressure compensator factor = 0.05 (compensator is 10 feet away)

Pressure loss at 30 ft (15.2 m) hose (P_3):

$$P_3 = \frac{30}{50} \times 2.7 + 0.05 = 2.1 \text{ psig}$$

$$\left[\frac{15.2}{15.3} \times 20.[illegible] + [illegible] = [illegible] \text{ kPa} \right]$$

Pressure at tool inlet:

$$P_4 = 103.7 - 2.1 = 101.6 \text{ psig}$$

$$[= 730 - 21.1 = 709.9 \text{ kPa (gauge)}]$$

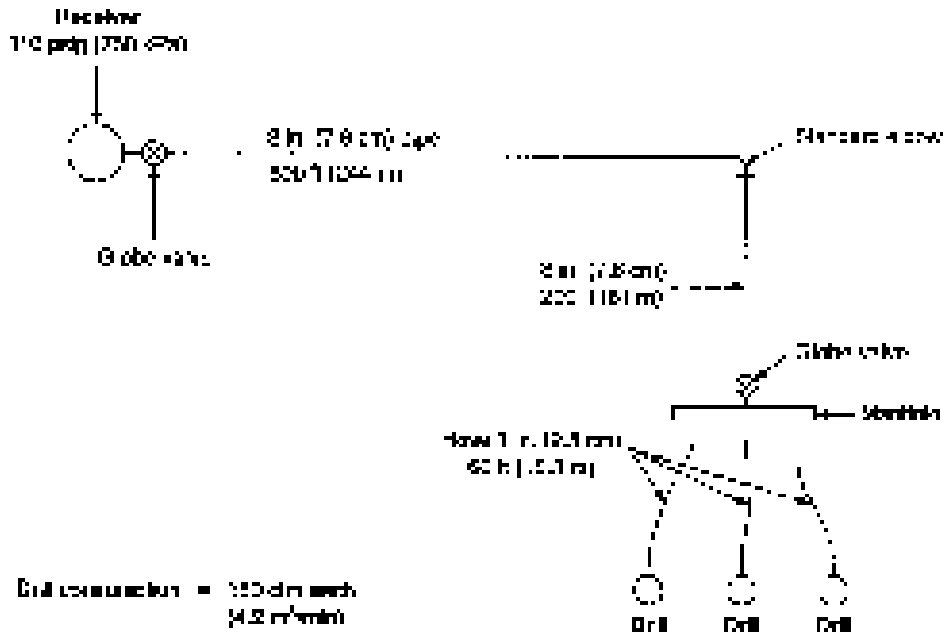

Figure 9.5 Compressed air system layout

Compressed Air Costs

The cost of providing compressed air power can be calculated using the rule of thumb of Chapter 17. Air costs usually expressed in dollars per kilowatt-hour, taking into account the initial purchase and installation costs range from [illegible] and [illegible] to [illegible].

Leaks in the system can be costly. For example, a compressor operating at 100 psig (690 kPa) supplying a line with an equivalent [illegible] per month. At a cost of [illegible] ($[illegible]), this represents a waste of [illegible] per month.

Compressed Air Safety

Compressed air systems present several various safety hazards. A certain number of problems are caused by misuse of a tool, pipe or air system, or positioning a compressor so that it is exposed to dust and fumes. A considerably uncommon hazard can result from the rupture of a pressurized hose or tube, or by a flying object.

Some major precautions which should be observed in the operation of compressed air systems are the following:

- Compressed air vessels and receivers must meet American Society of Mechanical Engineers (ASME) code standards.
- Reduce performance maintenance on compressors and power by pulling fuses or disconnecting the power switch.

- Test relief valves at least once a year.
- Compressed air [illegible] pressure must be reduced to [illegible] psi [illegible] and used with a [illegible] and approved protective equipment.
- Do not exceed the rated [illegible] operating pressure for hose, pipe, valves, fittings, and other fittings.
- [illegible] safety devices [illegible] at the supply source to reduce pressure in the event of hose failure.
- [illegible] power [illegible] from becoming accidentally disconnected.

9–3 WATER SUPPLY SYSTEMS

Principal Types of Pumps

[illegible] pumps are [illegible] for permanent [illegible]. Reciprocating pumps include reciprocating pumps and [illegible] pumps. A [illegible] is used in construction [illegible] it is well to understand the [illegible] reciprocating pumps. Reciprocating pumps [illegible] the piston so that water is pumped as the piston moves [illegible] pumps are [illegible] a duplex pump has two cylinders [illegible] pumps are [illegible] duplex pump is a [illegible] cylinder [illegible] reciprocating pump in which pumping action [illegible] during one cycle [illegible] the piston [illegible]

Diaphragm pumps utilize [illegible] diaphragm is pushed back and forth [illegible] the pump [illegible] pumping action. Diaphragm pumps are [illegible] capacity of pumping water containing [illegible] and [illegible] volumes of air along with water. Hence diaphragm pumps are widely used for [illegible] [illegible] Standard [illegible] diaphragm pump [illegible] 3/8 inch. Pump size [illegible] the nominal diameter of the suction and discharge openings. A [illegible] diaphragm pump is shown in Figure 9–6.

Centrifugal [illegible] pumps must [illegible] water before they will [illegible] permits centrifugal pumps [illegible] the pump housing to create a [illegible] pump action to [illegible] the pump. Most [illegible] are [illegible] of the self-priming variety.

In the United States, the Construction Engineering Research Laboratory (CERL) has developed standards for self-priming centrifugal pumps, [illegible] pumps, and diaphragm pumps designed for construction use. Self-priming centrifugal pumps are [illegible] by the Corps of Engineers, Bureau of Reclamation, Mobile Mobile, and MTC and [illegible] 30 other purposes [illegible] [illegible] to [illegible] gal/min [illegible]

Figure 9.6 Two-powered diaphragm pump (courtesy of Crane Pumps & Systems)

[illegible] Manual pumps are required [illegible] [illegible] [illegible]

Figure 9-7 Self priming centrifugal pump at coal construction site (Courtesy of Crane Pumps & Systems)

Figure 9-8 Model CP 20H 2-in. centrifugal trash pump (Courtesy of Crane Construction Equipment)

[illegible] and the pressure [illegible] smaller pipe is [illegible] the larger pipe. [illegible] is the [illegible] of [illegible] the surface [illegible] and the [illegible] of the discharge [illegible]

[illegible] is calculated [illegible] compressed air system. This is all [illegible] equivalent pipe length using Figure 9-4. [illegible] length of pipe plus the equivalent length of fittings is then multiplied by the appropriate factor from Table 9-7. The friction loss for any [illegible] in the system must [illegible] loss equals by multiplying its length by the appropriate factor from Table 9-7. [illegible] friction loss is then found as the sum of pipe friction and [illegible] loss. [illegible] order to obtain total head. The procedure is illustrated in Example 9-3.

EXAMPLE 9–3

We are [illegible] be pumped [illegible] discharge [illegible] above the pump [illegible] line. [illegible] pump [illegible] discharge [illegible] 4-in [illegible] type swing check valve and three standard elbows. The pump is located [illegible] above the [illegible] level. The [illegible] 20 ft [illegible] 4-in [illegible] equal with a [illegible] valve and the total head [illegible] pump [illegible] a flow of [illegible] (160 [illegible]). The equivalent length of the [illegible] ft [illegible]

Solution

Equivalent length of fittings (Figure 9-4):

$$\text{Swing check valve: } 0.[illegible] = [illegible] \text{ ft} = [illegible] \text{ m}$$

$$\text{Elbows: } 3 \times 0.[illegible] = [illegible] \text{ ft} = [illegible] \text{ m}$$

$$\text{Gate valve: } 0.[illegible] = [illegible] \text{ ft} = [illegible] \text{ m}$$

$$\text{Total} = [illegible] \text{ m}$$

$$\text{Length of straight pipe} = [illegible] \text{ m}$$

$$\text{Total equivalent pipe length} = [illegible] \text{ m}$$

$$h_f(\text{pipe}) = \frac{4.8}{100} \times [illegible] = [illegible]$$

$$\left[= \frac{[illegible]}{100} \times [illegible] = [illegible] \text{ m} \right]$$

$$h_f(\text{fittings}) = \frac{A_f}{100} \times [illegible] = [illegible]$$

$$\left[= \frac{[illegible]}{100} \times [illegible] = [illegible] \text{ m} \right]$$

$$\text{Static head} = [illegible] = [illegible] = [illegible] \text{ m}$$

$$\text{Total head} = [illegible] + [illegible] + [illegible] = [illegible] \text{ m}$$

$$= [illegible] + [illegible] + 0.2 = 25.5 \text{ m}$$

Table 9-7 Water Motion Sensor Type: Summary of Centrifugal Pump Curves, Association of Equipment Manufacturers (AEM)

Flow					Pipe Size (in. (cm))										
gal/min	l/min	¾ (2.0)	1 (3.0)	1 (2.5)	3/4 (2.0)	1 (2.5)	2 (5.0)	2½ (6.3)	3 (7.6)	4 (10.2)	5 (12.7)	6 (15.2)	8 (20.3)	10 (25.4)	12 (30.5)
2	8	4.4	1.[illegible]												
3	11	10.[illegible]	2.[illegible]	0.[illegible]											
4	15	17.4	[illegible]	1.[illegible]	0.[illegible]										
6	23	36.5	6.[illegible]	2.11	0.[illegible]										
10	38	85.0	24.7	7.61	1.[illegible]	0.[illegible]	0.[illegible]	[illegible]							
15	57		52.0	15.2	4.22	1.[illegible]	0.[illegible]	1.[illegible]							
20	76		88.0	[illegible]	[illegible]	2.[illegible]	1.15	[illegible]							
25	95			41.[illegible]	10.5	[illegible]	1.[illegible]	[illegible]	0.[illegible]						
30	114			[illegible]	10.8	[illegible]	2.41	2.[illegible]	0.[illegible]						
35	132			[illegible]	20.8	5.65	2.[illegible]	1	[illegible]						
40	151				25.0	[illegible]	4.[illegible]	1.1	0.[illegible]	0.1[illegible]					
45	170				35.5	[illegible]	[illegible]	1.[illegible]	0.[illegible]	0.11					
50	189				35.0	15.5	[illegible]	2.2	0.[illegible]	0.22					
60	227				52.0	23.5	5.[illegible]	3.0	1.2	0.32					
70	265				72.5	35.[illegible]	11.[illegible]	4.0	1.[illegible]	[illegible]	0.14				
75	284					38.[illegible]	13.8	4.8	2.[illegible]	[illegible]	[illegible]				
80	302					44.[illegible]	15.[illegible]	[illegible]	[illegible]	[illegible]	[illegible]				
90	34[illegible]					60.5	19.0	[illegible]	[illegible]	[illegible]	[illegible]				
100	[illegible]					80.5	29.8	[illegible]	[illegible]	[illegible]	[illegible]	0.08			
125	4[illegible]						57.1	11.[illegible]	[illegible]	[illegible]	[illegible]	0.10			
150	[illegible]						45.[illegible]	18.[illegible]	6.[illegible]	1.[illegible]	[illegible]	0.21			
175	[illegible]						73.1	[illegible]	8.1	[illegible]	[illegible]	[illegible]			
200	757							[illegible]	1.[illegible]	[illegible]	[illegible]	[illegible]			
225	[illegible]							[illegible]	[illegible]	[illegible]	[illegible]	[illegible]			
250	[illegible]							[illegible]	[illegible]	[illegible]	[illegible]	[illegible]	0.15		

Table 9-7 (Continued)

[illegible]	[illegible]	[illegible]	[illegible]	[illegible]	[illegible]	[illegible]	[illegible]		
[illegible]	[illegible]	[illegible]	[illegible]	[illegible]	[illegible]	[illegible]	[illegible]		
[illegible]	[illegible]	[illegible]	[illegible]	[illegible]	[illegible]	[illegible]	[illegible]		
[illegible]	[illegible]	[illegible]	[illegible]	[illegible]	[illegible]	[illegible]	[illegible]		
[illegible]	[illegible]	[illegible]	[illegible]	[illegible]	[illegible]	[illegible]	[illegible]		
[illegible]	[illegible]		[illegible]	[illegible]	[illegible]	[illegible]			
[illegible]	[illegible]		[illegible]	[illegible]	[illegible]	[illegible]	[illegible]		
[illegible]	[illegible]		[illegible]	[illegible]	[illegible]	[illegible]	[illegible]	[illegible]	[illegible]
[illegible]	[illegible]		[illegible]	[illegible]	[illegible]	[illegible]	[illegible]	[illegible]	[illegible]
[illegible]	[illegible]		[illegible]	[illegible]	[illegible]	[illegible]	[illegible]	[illegible]	[illegible]
[illegible]	[illegible]				[illegible]	[illegible]	[illegible]	[illegible]	[illegible]
[illegible]	[illegible]				[illegible]	[illegible]	[illegible]	[illegible]	[illegible]
[illegible]	[illegible]				[illegible]	[illegible]	[illegible]	[illegible]	[illegible]
[illegible]	[illegible]				[illegible]	[illegible]	[illegible]	[illegible]	[illegible]
[illegible]	[illegible]				[illegible]	[illegible]	[illegible]	[illegible]	[illegible]
[illegible]	[illegible]				[illegible]	[illegible]	[illegible]		
[illegible]	[illegible]				[illegible]	[illegible]	[illegible]		
[illegible]	[illegible]				[illegible]	[illegible]	[illegible]		
[illegible]	[illegible]				[illegible]	[illegible]	[illegible]		
[illegible]	[illegible]				[illegible]	[illegible]	[illegible]		
[illegible]	[illegible]					[illegible]	[illegible]	[illegible]	[illegible]
[illegible]	[illegible]					[illegible]	[illegible]	[illegible]	[illegible]
[illegible]	[illegible]					[illegible]	[illegible]	[illegible]	[illegible]
[illegible]	[illegible]					[illegible]	[illegible]	[illegible]	[illegible]
[illegible]	[illegible]					[illegible]	[illegible]	[illegible]	[illegible]
[illegible]	[illegible]						[illegible]	[illegible]	[illegible]
[illegible]	[illegible]						[illegible]	[illegible]	[illegible]
[illegible]	[illegible]						[illegible]	[illegible]	[illegible]
[illegible]	[illegible]						[illegible]	[illegible]	[illegible]
[illegible]	[illegible]						[illegible]	[illegible]	[illegible]
[illegible]	[illegible]							[illegible]	[illegible]
[illegible]	[illegible]							[illegible]	[illegible]
[illegible]	[illegible]							[illegible]	[illegible]
[illegible]	[illegible]							[illegible]	[illegible]
[illegible]	[illegible]								[illegible]
[illegible]	[illegible]								[illegible]
[illegible]	[illegible]								[illegible]

[illegible]

Table 9-8 Water Pressure in Hoses [illegible]

Flow		Hose Size [in. (cm)]											
gal/min	Total	[illegible] (1.0)	[illegible] (1.5)	[illegible] (2.5)	[illegible] (2.5)	[illegible] (3.0)	[illegible] (5.0)	[illegible] (8.0)	[illegible] (7.5)	[illegible] (10.5)	[illegible] (15.0)	[illegible] (19.5)	[illegible] (30.5)
5	[illegible]	[illegible]	[illegible]										
7.5	[illegible]	[illegible]	[illegible]										
7	[illegible]	[illegible]	[illegible]	[illegible]	[illegible]	[illegible]							
10	[illegible]	[illegible]	[illegible]	[illegible]	[illegible]	[illegible]	[illegible]						
15	[illegible]		[illegible]	[illegible]	[illegible]	[illegible]	[illegible]						
20	[illegible]			[illegible]	[illegible]	[illegible]	[illegible]	[illegible]					
25	[illegible]			[illegible]	[illegible]	[illegible]	[illegible]	[illegible]					
30	[illegible]			[illegible]	[illegible]	[illegible]	[illegible]	[illegible]	[illegible]				
35	[illegible]			[illegible]	[illegible]	[illegible]	[illegible]	[illegible]	[illegible]				
40	[illegible]				[illegible]	[illegible]	[illegible]	[illegible]	[illegible]				
45	[illegible]				[illegible]	[illegible]	[illegible]	[illegible]	[illegible]				
50	[illegible]					[illegible]	[illegible]	[illegible]	[illegible]	[illegible]			
60	[illegible]					[illegible]	[illegible]	[illegible]	[illegible]	[illegible]			
70	[illegible]						[illegible]	[illegible]	[illegible]	[illegible]			
80	[illegible]						[illegible]	[illegible]	[illegible]	[illegible]			
90	[illegible]							[illegible]	[illegible]	[illegible]			
100	[illegible]							[illegible]	[illegible]	[illegible]	[illegible]	[illegible]	[illegible]
125	[illegible]								[illegible]	[illegible]	[illegible]	[illegible]	[illegible]
150	[illegible]								[illegible]	[illegible]	[illegible]	[illegible]	[illegible]
175	[illegible]								[illegible]	[illegible]	[illegible]	[illegible]	[illegible]
200	[illegible]								[illegible]	[illegible]	[illegible]	[illegible]	[illegible]
225	[illegible]								[illegible]	[illegible]	[illegible]	[illegible]	[illegible]
250	[illegible]								[illegible]	[illegible]	[illegible]	[illegible]	[illegible]
300	[illegible]								[illegible]	[illegible]	[illegible]	[illegible]	[illegible]
350	[illegible]								[illegible]	[illegible]	[illegible]	[illegible]	[illegible]
400	[illegible]								[illegible]	[illegible]	[illegible]	[illegible]	[illegible]
450	[illegible]								[illegible]	[illegible]	[illegible]	[illegible]	[illegible]
500	[illegible]								[illegible]	[illegible]	[illegible]	[illegible]	[illegible]

Table 9.8 [illegible]

[illegible]	[illegible]	[illegible]	[illegible]	[illegible]	[illegible]	[illegible]
[illegible]	[illegible]	[illegible]	[illegible]	[illegible]	[illegible]	
[illegible]	[illegible]	[illegible]	[illegible]	[illegible]	[illegible]	
[illegible]	[illegible]	[illegible]	[illegible]	[illegible]	[illegible]	
[illegible]	[illegible]	[illegible]	[illegible]	[illegible]	[illegible]	[illegible]
[illegible]	[illegible]	[illegible]	[illegible]	[illegible]	[illegible]	[illegible]
[illegible]	[illegible]	[illegible]	[illegible]	[illegible]	[illegible]	[illegible]
[illegible]	[illegible]	[illegible]	[illegible]	[illegible]	[illegible]	[illegible]
[illegible]	[illegible]	[illegible]	[illegible]	[illegible]	[illegible]	[illegible]
[illegible]	[illegible]	[illegible]	[illegible]	[illegible]	[illegible]	[illegible]
[illegible]	[illegible]	[illegible]	[illegible]	[illegible]	[illegible]	[illegible]
[illegible]	[illegible]	[illegible]	[illegible]	[illegible]	[illegible]	[illegible]
[illegible]	[illegible]	[illegible]	[illegible]	[illegible]	[illegible]	[illegible]
[illegible]	[illegible]	[illegible]	[illegible]	[illegible]	[illegible]	[illegible]
[illegible]	[illegible]	[illegible]	[illegible]	[illegible]	[illegible]	[illegible]
[illegible]	[illegible]	[illegible]	[illegible]	[illegible]	[illegible]	[illegible]
[illegible]	[illegible]	[illegible]	[illegible]	[illegible]	[illegible]	[illegible]
[illegible]	[illegible]	[illegible]	[illegible]	[illegible]	[illegible]	[illegible]
[illegible]	[illegible]	[illegible]	[illegible]	[illegible]	[illegible]	[illegible]
[illegible]	[illegible]	[illegible]	[illegible]	[illegible]	[illegible]	[illegible]
[illegible]	[illegible]	[illegible]	[illegible]	[illegible]	[illegible]	[illegible]
[illegible]	[illegible]	[illegible]	[illegible]	[illegible]	[illegible]	[illegible]
[illegible]	[illegible]	[illegible]	[illegible]	[illegible]	[illegible]	[illegible]
[illegible]	[illegible]	[illegible]	[illegible]	[illegible]	[illegible]	[illegible]
[illegible]	[illegible]	[illegible]	[illegible]	[illegible]	[illegible]	[illegible]
[illegible]	[illegible]	[illegible]	[illegible]	[illegible]	[illegible]	[illegible]
[illegible]	[illegible]	[illegible]	[illegible]	[illegible]	[illegible]	[illegible]
[illegible]	[illegible]	[illegible]	[illegible]	[illegible]	[illegible]	[illegible]
[illegible]	[illegible]	[illegible]	[illegible]	[illegible]	[illegible]	[illegible]
[illegible]	[illegible]	[illegible]	[illegible]	[illegible]	[illegible]	[illegible]
[illegible]	[illegible]	[illegible]	[illegible]	[illegible]	[illegible]	[illegible]
[illegible]	[illegible]	[illegible]	[illegible]	[illegible]	[illegible]	[illegible]

[illegible]

Pump Selection

The capacity of a centrifugal pump depends on the pump size and speed, the impeller diameter, the [illegible] of the system, and the elevation of the pump below the water source level. Adverse conditions [illegible] the height of the pump [illegible] and [illegible] minimum [illegible] and [illegible] centrifugal pump [illegible] outside [illegible] consulting may be [illegible] from [illegible] minimum capacity [illegible] published by the Hydraulic Institute. The capacity [illegible] of a typical pump is [illegible] in Table 9-9. Larger pumps [illegible] may be [illegible] capacity [illegible] weight of pump [illegible] in the table. The procedure for pump selection is illustrated in Example 9-4.

EXAMPLE 9-4

Determine the minimum size of a 3600 rpm centrifugal pump required to pump 250 gal/min (0.016 m³/s) through the system of Example 9-3.

SOLUTION

Height of pump above source water = [illegible] m

Required total head = 78.2 ft (23.8 m)

Capacity of 40 M drain = [illegible] = 492 gal/min

[illegible]

The 40 M pump is satisfactory.

Effect of Altitude and Temperature

The maximum [illegible] height of pump above the source water level at which a centrifugal pump will [illegible] is limited by [illegible] atmospheric pressure [illegible] vapor pressure of water at the prevailing temperature. At sea level and 15.6°C (60°F), for example, the maximum theoretical lift is [illegible] ft (10.3 m). The maximum practical lift is somewhat less, about 25 ft (7.6 m) [illegible] at sea level and 15.6°C (60°F). Figure 9-9 illustrates the effect of temperature and [illegible] on the maximum practical suction lift.

Table 9–9 Minimum capacity (gal/min) required from a fire pump (Courtesy of Underwriters Laboratories Inc.)

Total Head Including Friction	Model [illegible]				Total Head Including Friction	Model [illegible]			
	Height of Pump Above Water (ft)					Height of Pump Above Water (ft)			
	10 (3.0)	15 (4.6)	20 (6.1)	25 (7.6)		10 (3.0)	15 (4.6)	20 (6.1)	25 (7.6)
[illegible]	[illegible]	—	—	—	[illegible]	[illegible]	—	—	—
[illegible]	[illegible]	[illegible]			[illegible]	[illegible]	[illegible]		
[illegible]	[illegible]	[illegible]	[illegible]		[illegible]	[illegible]	[illegible]	[illegible]	[illegible]
[illegible]	[illegible]	[illegible]	[illegible]	[illegible]	[illegible]	[illegible]	[illegible]	[illegible]	[illegible]
[illegible]	[illegible]	[illegible]	[illegible]	[illegible]	[illegible]	[illegible]	[illegible]	[illegible]	[illegible]
[illegible]	[illegible]	[illegible]	[illegible]	[illegible]	[illegible]	[illegible]	[illegible]	[illegible]	[illegible]
[illegible]	[illegible]	[illegible]	[illegible]	[illegible]	[illegible]	[illegible]	[illegible]	[illegible]	[illegible]
[illegible]	[illegible]	[illegible]	[illegible]	[illegible]	[illegible]	[illegible]	[illegible]	[illegible]	[illegible]

Total Head Including Friction	Model [illegible]				Total Head Including Friction	Model [illegible]			
	Height of Pump Above Water (ft)					Height of Pump Above Water (ft)			
	10 (3.0)	15 (4.6)	20 (6.1)	25 (7.6)		10 (3.0)	15 (4.6)	20 (6.1)	25 (7.6)
[illegible]	[illegible]	—	—	—	[illegible]	[illegible]		—	—
[illegible]	[illegible]	[illegible]	[illegible]	—	[illegible]	[illegible]	[illegible]	[illegible]	—
[illegible]	[illegible]	[illegible]	[illegible]	[illegible]	[illegible]	[illegible]	[illegible]	[illegible]	[illegible]
[illegible]	[illegible]	[illegible]	[illegible]	[illegible]	[illegible]	[illegible]	[illegible]	[illegible]	[illegible]
[illegible]	[illegible]	[illegible]	[illegible]	[illegible]	[illegible]	[illegible]	[illegible]	[illegible]	[illegible]
[illegible]	[illegible]	[illegible]	[illegible]	[illegible]	[illegible]	[illegible]	[illegible]	[illegible]	[illegible]
[illegible]	[illegible]	[illegible]	[illegible]	[illegible]	[illegible]	[illegible]	[illegible]	[illegible]	[illegible]
[illegible]	[illegible]	[illegible]	[illegible]	[illegible]	[illegible]	[illegible]	[illegible]	[illegible]	[illegible]

Table [illegible] (Continued)

Total Head Including Friction	Model [illegible] (Hz) Height of Pump Above Water (ft/m) 10 (3.0)	15 (4.5)	20 (6.1)	25 (7.6)	Total Head Including Friction	Model [illegible] (Hz) Height of Pump Above Water (ft/m) [illegible]	[illegible]	[illegible]	[illegible]
[illegible]	[illegible]	—	—	—	[illegible]	[illegible]	[illegible]	[illegible]	[illegible]
[illegible]	[illegible]	[illegible]	[illegible]		[illegible]	[illegible]	[illegible]	[illegible]	[illegible]
[illegible]	[illegible]	[illegible]	[illegible]	[illegible]	[illegible]	[illegible]	[illegible]	[illegible]	[illegible]
[illegible]	[illegible]	[illegible]	[illegible]	[illegible]	[illegible]	[illegible]	[illegible]	[illegible]	[illegible]
[illegible]	[illegible]	[illegible]	[illegible]	[illegible]	[illegible]	[illegible]	[illegible]	[illegible]	[illegible]
[illegible]	[illegible]	[illegible]	[illegible]	[illegible]	[illegible]	[illegible]	[illegible]	[illegible]	[illegible]
[illegible]	[illegible]	[illegible]	[illegible]	[illegible]	[illegible]	[illegible]	[illegible]	[illegible]	[illegible]
[illegible]	[illegible]	[illegible]	[illegible]	[illegible]	[illegible]	[illegible]	[illegible]	[illegible]	[illegible]
[illegible]	[illegible]	[illegible]	[illegible]	[illegible]	[illegible]	[illegible]	[illegible]	[illegible]	[illegible]
[illegible]	[illegible]	[illegible]	[illegible]	[illegible]	[illegible]	[illegible]	[illegible]	[illegible]	[illegible]

Total Head Including Friction	Model [illegible] (Hz) Height of Pump Above Water (ft/m) 10 (3.0)	15 (4.5)	20 (6.1)	25 (7.6)	Total Head Including Friction	Model [illegible] (Hz) Height of Pump Above Water (ft/m) [illegible]	[illegible]	[illegible]	[illegible]
[illegible]	[illegible]	—	—	—	[illegible]	[illegible]			
[illegible]	[illegible]	[illegible]	[illegible]		[illegible]	[illegible]	[illegible]	[illegible]	[illegible]
[illegible]	[illegible]	[illegible]	[illegible]	[illegible]	[illegible]	[illegible]	[illegible]	[illegible]	[illegible]
[illegible]	[illegible]	[illegible]	[illegible]	[illegible]	[illegible]	[illegible]	[illegible]	[illegible]	[illegible]
[illegible]	[illegible]	[illegible]	[illegible]	[illegible]	[illegible]	[illegible]	[illegible]	[illegible]	[illegible]
[illegible]	[illegible]	[illegible]	[illegible]	[illegible]	[illegible]	[illegible]	[illegible]	[illegible]	[illegible]
[illegible]	[illegible]	[illegible]	[illegible]	[illegible]	[illegible]	[illegible]	[illegible]	[illegible]	[illegible]
[illegible]	[illegible]	[illegible]	[illegible]	[illegible]	[illegible]	[illegible]	[illegible]	[illegible]	[illegible]
[illegible]	[illegible]	[illegible]	[illegible]	[illegible]	[illegible]	[illegible]	[illegible]	[illegible]	[illegible]
[illegible]	[illegible]	[illegible]	[illegible]	[illegible]	[illegible]	[illegible]	[illegible]	[illegible]	[illegible]

Table 9-5 (Continued)

Total Head Including Friction	Model 200-M (8-in.) Height of Pump Above Water, ft (m) 10 (3.1)	15 (4.6)	20 (6.1)	25 (7.6)
[illegible]	[illegible]	[illegible]	[illegible]	[illegible]
[illegible]	[illegible]	[illegible]	[illegible]	[illegible]
[illegible]	[illegible]	[illegible]	[illegible]	[illegible]
[illegible]	[illegible]	[illegible]	[illegible]	[illegible]
[illegible]	[illegible]	[illegible]	[illegible]	[illegible]
[illegible]	[illegible]	[illegible]	[illegible]	[illegible]
[illegible]	[illegible]	[illegible]	[illegible]	[illegible]
[illegible]	[illegible]	[illegible]	[illegible]	[illegible]
[illegible]	[illegible]	[illegible]	[illegible]	[illegible]
[illegible]	[illegible]	[illegible]	[illegible]	[illegible]
[illegible]	[illegible]	[illegible]	[illegible]	[illegible]

Total Head Including Friction	Model 200-M (12-in.) Height of Pump Above Water, ft (m) 10 (3.1)	15 (4.6)	20 (6.1)	25 (7.6)
[illegible]	[illegible]	[illegible]	[illegible]	[illegible]
[illegible]	[illegible]	[illegible]	[illegible]	[illegible]
[illegible]	[illegible]	[illegible]	[illegible]	[illegible]
[illegible]	[illegible]	[illegible]	[illegible]	[illegible]
[illegible]	[illegible]	[illegible]	[illegible]	[illegible]
[illegible]	[illegible]	[illegible]	[illegible]	[illegible]
[illegible]	[illegible]	[illegible]	[illegible]	[illegible]
[illegible]	[illegible]	[illegible]	[illegible]	[illegible]
[illegible]	[illegible]	[illegible]	[illegible]	[illegible]
[illegible]	[illegible]	[illegible]	[illegible]	[illegible]
[illegible]	[illegible]	[illegible]	[illegible]	[illegible]

Total Head Including Friction	Model 125-M (24-in.) Height of Pump Above Water, ft (m) 10 (3.1)	15 (4.6)	20 (6.1)	25 (7.6)
[illegible]	[illegible]	[illegible]	[illegible]	—
[illegible]	[illegible]	[illegible]	[illegible]	[illegible]
[illegible]	[illegible]	[illegible]	[illegible]	[illegible]
[illegible]	[illegible]	[illegible]	[illegible]	[illegible]
[illegible]	[illegible]	[illegible]	[illegible]	[illegible]
[illegible]	[illegible]	[illegible]	[illegible]	[illegible]
[illegible]	[illegible]	[illegible]	[illegible]	[illegible]
[illegible]	[illegible]	[illegible]	[illegible]	[illegible]
[illegible]	[illegible]	[illegible]	[illegible]	[illegible]
[illegible]	[illegible]	[illegible]	[illegible]	[illegible]
[illegible]	[illegible]	[illegible]	[illegible]	[illegible]

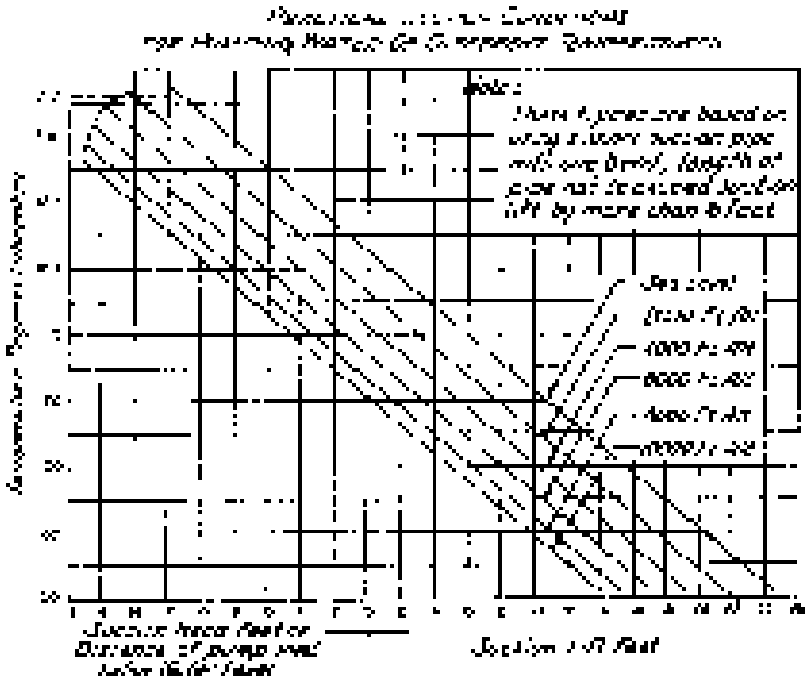

Figure 9-9 Maximum practical suction lift for centrifugal pumps. (Courtesy of Centrifugal Pump Bureau of Construction Industry Manufacturers Association)

Special Types of Pumps

It is sometimes necessary to pump water from a place where the vertical distance between the pump and the water level in the pump suction exceeds the maximum practical lift for conventional pumps. In such cases, a multistage centrifugal pump can be used. When the suction lift is greater than a single pump can handle, several centrifugal pumps can be placed in series. Pumps capable of operating at a vertical lift of 300 ft (152.5 m) are available.

In pump and air lift installations, the most common type of pump used for pumping water from wells is the turbine pump. In this pump, the pump impeller is mounted in the bowl at the bottom of the well, and the motor is mounted on the surface. The pump impeller is driven by a long vertical shaft. Lubrication of the bearings in the bowl assembly is provided by water from the pump or by a separate water line. Turbine pumps are available in capacities ranging from 5 to 2000 gpm (0.3 to 126 L/s) and for lifts up to 300 ft (91.5 m). Some manufacturers offer a variety of pump sizes, including capacity, size of the impeller, and the number of stages. The number of stages is the number of impellers in the pump. The lift of a single stage is usually limited to 25 ft (7.6 m). Multiple stages are used for higher lifts. The lift of a single stage is the distance from the surface of the water in the well to the center of the impeller. The pump is primed by filling the suction pipe with water. The pump is then started. The impeller creates a vacuum in the suction pipe, which allows the atmospheric pressure to push the water from the well into the pump. The pump must be primed before it can operate. If the suction pipe is not filled with water, the pump will not operate. The pump must be primed after each shutdown. The pump must be primed after each shutdown. The pump must be primed after each shutdown.

conventional pump. Air-lift systems have low efficiency and a limited capability. They are practical only for testing low wells and for cleaning out recently drilled production wells.

PROBLEMS

1. [illegible] air recovery system to supply flow to a mud tank and drill a vertical hole using 3 ft (0.91 m) drill collars and 6 in (152 mm) drill pipe. The maximum air compressor [illegible] is 100 psig (690 kPa). The required air supply system will consist of [illegible] ft (152 m) of pipe and a mudlock. Mud drill collars [illegible] by 50 ft (15.2 m) of 6 in (152 mm) pipe. Manifold pressure loss is rated at 2.5 psig (17.2 kPa). Determine the minimum diameter size of pipe required to maintain a pressure of at least 15 psig (103 kPa) at the drill stem [illegible] operating simultaneously. Assume a 75% line efficiency.

2. What type of pump would be most appropriate for a situation in which [illegible] for consecutive centrifugal pumps [illegible] 3 ft (0.9 m)?

3. What is the total [illegible] pump capacity contributed to a pipeline at a rate of [illegible] 16 ft (4.8 m) when the temperature is 68°F (20°C)?

4. An 8 mm [illegible] centrifugal pump will be used to deliver a [illegible] during [illegible]. The required pump [illegible] is [illegible] psi (kPa). The pump will be located 10 ft (3 m) above the [illegible]. The [illegible] line will consist of [illegible] ft (m) of [illegible] and [illegible] of [illegible] 2 in (5.1 cm) [illegible]. Water at 1 atm, chapped 20 ft (6.1 m) above the pump level. What is the total head developed? What is the minimum [illegible] pump required?

5. Water must be [illegible] from a stream to a water tank [illegible]. The [illegible] power will be 30 ft (9.1 m) above the stream. The pipeline from the pump to the tank will consist of [illegible] standard elbows and a check valve. The pump will be located 10 ft (3 m) above the stream. The suction line will consist of [illegible] 0.2 mm) [illegible] equivalent radial [illegible] valve [illegible] = [illegible] ft. The required flow is 250 gal/min (1 m³/min). Find the total [illegible] pump [illegible]. What is the nominal size of the [illegible] pump required for this system?

6. A [illegible] system consists of [illegible] ft (m) [illegible] drill collars [illegible] ft (m) drill pipe, two [illegible] and a manifold. The mud tank drains [illegible] 200 [illegible] each [illegible] ft (m) [illegible] 1 ft (0.3 m) [illegible] 1 ft = (0.3 m) loop. The total equivalent length is [illegible] ft (m). The average is 350. Determine the power [illegible] the mud [illegible] operating simultaneously [illegible] pressure is 100 psig (690 kPa).

7. [illegible] the [illegible] of the following equipment [illegible] a rock [illegible] for [illegible] 5% [illegible], a pump efficiency of 0.90, and [illegible]

[illegible] from Table [illegible]. What is the minimum required size of air compressor required if the project is located at an elevation of 6,000 ft (1830 m)?

Equipment	Number
Wet, [illegible]	2
Dewatering [illegible]	
Sediment [illegible]	[illegible]

8. Explain the reason why air compressor capacity is rated [illegible]
9. How does the efficiency of a compressed air pipeline vary with pressure?
10. Develop a computer program which will determine the minimum total size of an air compressor plant for a given production system. Input the number of machines, the power and type of tool, the number of tools, and the required air consumption per tool. Additional input should include the pipe length, allowance factor, and [illegible] Notes: Develop your program.

REFERENCES

1. [illegible]
2. [illegible]
3. [illegible]
4. [illegible]

PART TWO

Building Construction

10 Foundations

10-1 FOUNDATION SYSTEMS

The foundation of a structure supports the weight of the structure and its applied loads. The [illegible] foundation [illegible] which [illegible] as well as the structural system designed to transmit building loads to the supporting soil or rock. Failure of a foundation system may result from [illegible] or [illegible] of a building's supporting structure resulting from soil movement or consolidation rather than from failure of the foundation structure itself. In this chapter the term "foundation" will almost always be used to designate those structural components that transmit loads to the supporting soil or rock.

A foundation is part of its building structure, the portion of the building which is located below the surrounding ground surface. The principal types of foundation systems include spread footings, piles, caissons, [illegible] and floor [illegible] or by [illegible] construction.

Since [illegible] describing a building's construction is based on the location of the [illegible] in this regard, the types of construction include [illegible] construction, [illegible] and [illegible] construction for [illegible] the lowest floor is the [illegible] directly on the ground. In [illegible] construction, the lowest floor of the building is suspended [illegible] floor [illegible] on the ground. [illegible] space [illegible] utility lines and structures are installed below the floor [illegible]. [illegible] provides [illegible] space [illegible] additional [illegible] relatively low cost. Unless carefully constructed, however, basements are [illegible] by water leakage and dampness.

10-2 SPREAD FOOTINGS

A spread footing is the simplest and most [illegible] foundation. It [illegible] foundation typically consists of a [illegible] slab. A footing is a [illegible] of the [illegible] building [illegible] the footing [illegible] the supporting soil.

Spread footing

Figure 10-1 Footings on piles.

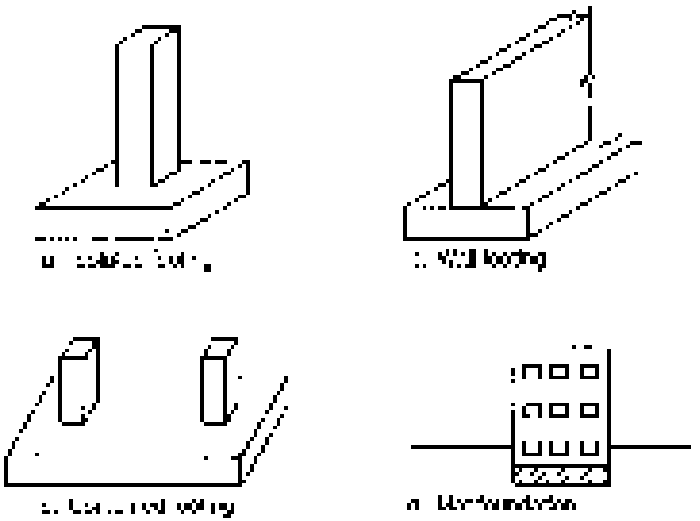

Figure 10-2 Types of spread footings.

[illegible]

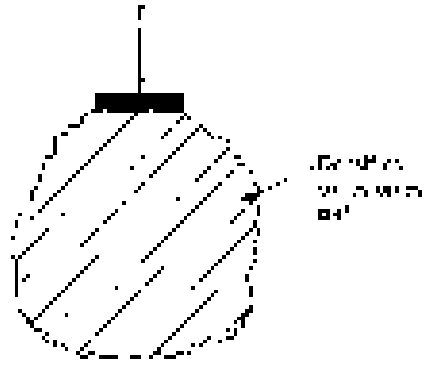

Figure 10-3 Soil densification under footing.

[illegible]

[illegible]

10-3 PILES

[illegible]

Pile Types

[illegible]

[illegible] hardening concrete mixture is like liquid. It flows [illegible] liquid concrete ability is limited and piles are [illegible] in [illegible] loads. Timber piles can be used [illegible] decay. However, [illegible] of permanent [illegible] wood described in Chapter [illegible] generally [illegible] of timber piles [illegible]

Precast concrete piles may be manufactured in a great variety of cross-sectional shapes. Commonly used cross-sectional shapes include round, square, octagonal, hexagonal, and [illegible] shapes. Precast concrete piles are [illegible] and are [illegible] Unlike timber piles, precast concrete piles can be made the [illegible] type of pile available for a given pile size, because of their [illegible] and [illegible] they require [illegible] driving equipment [illegible] damage. Since they have little strength in bending, they may be broken by improper handling or driving equipment [illegible] of pressure [illegible] and cutting [illegible] and saws. Splicing is relatively [illegible] and requires special [illegible]

Cast-in-place concrete piles or shell piles are constructed by driving a steel shell into the ground, [illegible] the shell is placed in place in the shell to reduce shell damage during driving. Although [illegible] may be pulled [illegible] and filled with concrete, the [illegible] shells left in place and are [illegible] concrete. The principal types of shell piles include uniform taper, step-taper, and straight-cylinder [illegible] piles. The shell for cast-in-place piles are light, easy to handle, and easy to [illegible]. Since shells may be damaged during driving, they should be visually inspected before filling with concrete. Shells driven into expansive soils should be filled with concrete as soon as possible after driving to reduce the possibility of shell damage due to lateral soil pressure.

Wood piles are capable of supporting [illegible] loads and are [illegible] to deal with corrosion, and are easily cut and spliced. Common types of wood piles include tapered and tips piles, which are [illegible] to the shape of the pile [illegible]. Pipe piles are usually filled with concrete after driving to [illegible] additional strength. The principal disadvantages of wood piles include [illegible]

Composite piles are [illegible] of two materials. Two [illegible] are [illegible]. For example, the lower section of a pile might be timber, while the upper section might be concrete. This [illegible] composite piles [illegible] the lower section would be [illegible] and hence are subject to decay while the upper section would be [illegible].

Soil piles are also known as [illegible] concrete piles, [illegible] piles, and [illegible] piles. They are a special form of cast-in-place concrete pile in which a [illegible] is used to [illegible] during driving. The [illegible] of the [illegible] of the [illegible] piles. The driven [illegible] is illustrated in Figure [illegible]. A drive pipe is [illegible] with a closed end. A [illegible] is placed in the drive pipe and driving both the casing and the [illegible]. The [illegible] is then [illegible] inside the drive pipe [illegible]. The drive pipe is then [illegible] in place and [illegible] with [illegible] and [illegible] the drive pipe. The [illegible] is then [illegible] the [illegible] and the [illegible] concrete into place by [illegible] the [illegible] and the shell. The shell is then filled in the same manner as a cast-in-place [illegible]

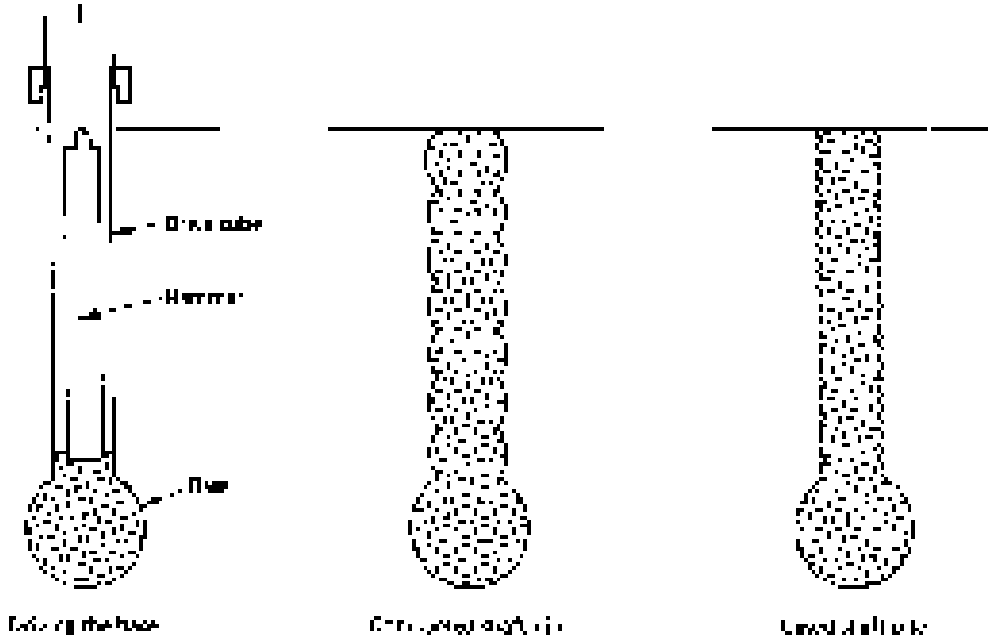

Figure 10–4 Pile types.

concrete pile. Compacted sand piles usually have a higher load capacity than a comparable gravel pile due to the increased pressure between the compacted sand and the surrounding soil.

Although some piles are still driven [illegible] 20 and high-capacity [illegible] 154 kips piles. These are most often employed in areas with very poor soil or in [illegible] to provide sufficient additional support to build [illegible] structures. Specific applications include [illegible] and [illegible] on sloping or unstable slopes. While these [illegible] piles are [illegible] drilled [illegible] 3 to 5 ft in [illegible] [illegible] in [illegible] and [illegible] soil, coating, and [illegible] [illegible] by grouting.

Pile Driving

In [illegible] pile is driven by [illegible] drop hammer weighs [illegible] large [illegible] of the pile. The [illegible] is illustrated in [illegible] in Figure 10–4. A variety of [illegible] available including [illegible] methods [illegible] provides the [illegible] on the pile driver. The [illegible] for the drop weight and the pile. Driving [illegible] the pile, driving it into the [illegible] [illegible] the hammer until the pile [illegible] original [illegible] requirements [illegible] the hammer [illegible] equal to the load [illegible] collapse of the [illegible]

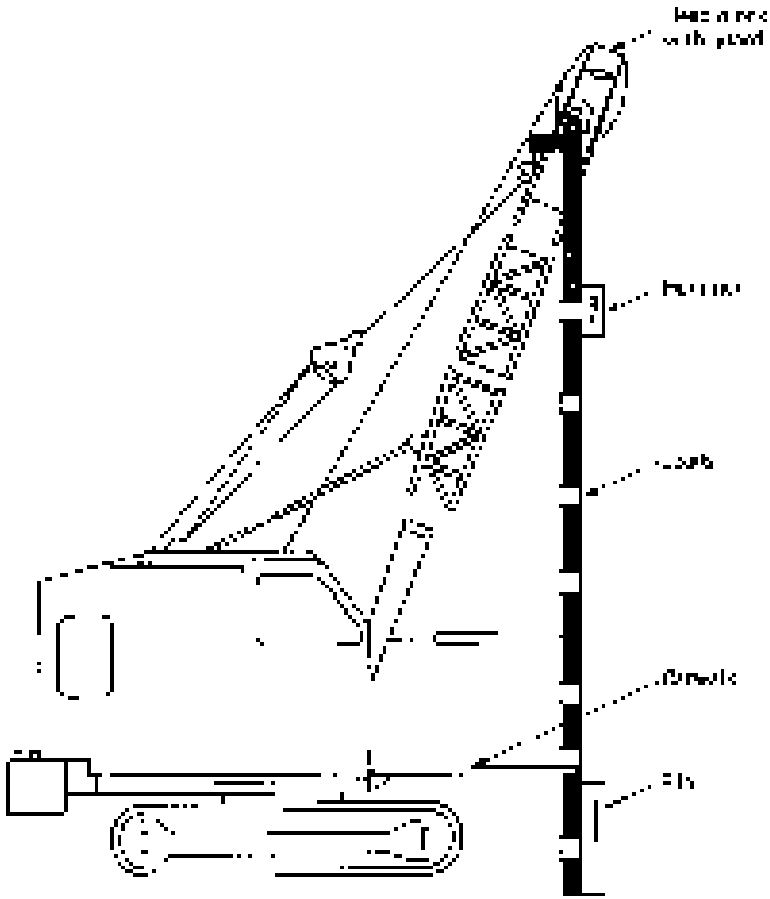

Figure 10-5 Drop hammer pile driver.

[illegible]

The remaining types of pile drivers are [illegible] powered hammers. That is, they are [illegible] working. Pile driver hammers [illegible] a piston [illegible] weight [illegible] to [illegible] a working pile. Steam power has [illegible] been largely replaced by compressed air power. Typically, power is supplied by compressed air in most newer rigs. Single-acting hammers use air power to [illegible] only, after this falls under the force of gravity. Double-acting and differential hammers use fluid power to both [illegible] the piston. This [illegible] and differential hammers can be [illegible] than a single-acting hammer of equal capacity. Typical operating [illegible] are [illegible] for single-acting hammers and [illegible] for double-acting hammers. Differential hammers usually operate at [illegible] speeds.

A steel [illegible] machine [illegible] that occurs in a manner similar to [illegible] cylinder [illegible]. The principle of [illegible] is illustrated in Figure [illegible]

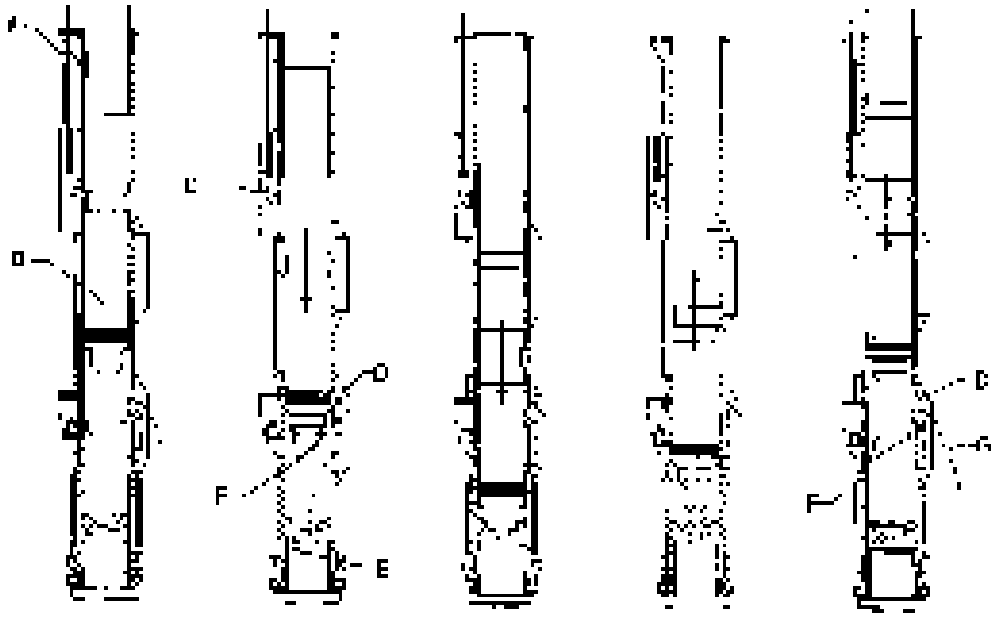

Figure 10-6. Operation of a diesel pile hammer. (Courtesy of MKT Manufacturing, Inc.)

[illegible]

[illegible]

Pile-Driving Procedures

[illegible]

Figure 10–7 Hydraulically powered vibratory driver-extractor. (Courtesy of [illegible] Manufacturing Inc.)

powered crusher [illegible]. The driver [illegible] and [illegible] like pc [illegible] driving. The [illegible] angle [illegible] common [illegible] driver [illegible] (Figure 10–6) from [illegible] driving [illegible] is [illegible]. The shell [illegible] (Figure 10–8) [illegible] driving [illegible] been passed (Figure 10–9) the shell [illegible] be filled with concrete.

[illegible] pile [illegible] type pile [illegible] the [illegible] will yield [illegible] the [illegible] driving [illegible] of [illegible] pile [illegible] the [illegible] weight [illegible] the [illegible] weight [illegible] pile [illegible] pile [illegible] [illegible] would be [illegible] will [illegible] driving [illegible] [illegible] to [illegible].

$$\text{Driving weight efficiency} = \frac{\text{Resistance to penetration (in-lb)}}{\text{Vibrating force (lb)}} \qquad (10\text{–}1)$$

In [illegible] 10–1 [illegible] driving weight [illegible] pile [illegible] weight of the [illegible] vibrating mass to [illegible] the [illegible] vibrating mass.

[illegible] hammers with [illegible] be used for driving piles [illegible] pile; however, [illegible] driving [illegible] it [illegible] to [illegible] between the [illegible] hammers.

Figure 10–8 [illegible]

Prestressed concrete cylinder piles may be used in corrosive driving environments of marine or sea water. Pile driving plant consists of the driving equipment, including hammers, diesel, and vibratory hammers, may be used to install piles as well as extract them.

Determining Pile Load Capacity

The mechanism of transferring pile load capacity is a complex one since it involves pile soil interaction during driving, pile set in place, and the pile in place under the structural weight of the pile itself. The geotechnical engineer who designs the foundation may provide a pile design. Pile is the general additional driving stresses, as well as support the design loads of the structure without excessive settlement. The two-sense of the term pile capacity is discussed in the pile driving pile load tests section later in this section.

A number of dynamic pile driving equations have been developed to anticipate or predict the static load capacity of pile under the hammer blows during pile driving. The application for each equation is to equate resistance energy to driving energy with adjustments for energy lost during driving. The equations vary in pile size and load. A number of modifications in basic driving equations have been proposed to account for specific factors required for measured pile capacity. Equation 10-2, for determining the safe capacity of piles driven by power hammers, has been incorporated in some U.S. building codes. Minimum hammer energy may also be specified in the building code.

$$R = \frac{\left(\frac{2E_h}{S + 0.1}\right)\left(\frac{W_h + K W_p}{W_h + W_p}\right)}{} \qquad (10\text{-}2)$$

where R = safe load, lb

S = average penetration per blow, in. (or in. for last 10 blows)

E_h = energy of hammer, in. lb

K = coefficient of restitution $\begin{cases} 0.25 \text{ for piles weighing all rigid or less} \\ 0.5 \text{ for piles weighing 50 to 100 lb/ft} \\ 0.6 \text{ for piles weighing over 100 lb/ft} \end{cases}$

W_h = weight of hammer, lb

W_p = weight of pile, including driving appurtenances, lb

EXAMPLE 10-1

Using Equation 10-2 and the driving data below, determine the safe load capacity of a 16 in. square concrete pile. Assume that the unit weight of the pile is 150 lb/ft³.

Hammer energy = 14,000 ft lb

Pile weight = 10,000 lb

Weight of hammer and appurtenances = 20,000 lb

Average penetration last 10 blows = 0.0 in./blow

Solution

$$\text{Weight of pile} = \frac{\pi \times 0.5^2}{4} \times 60 \times 150 = 3250\ \text{lb}$$

$$W_p = 2500 \times 1.10(0.4) = 1100\ \text{lb}$$

$$\text{Weight per linear foot of pile} = \frac{3250}{50} = 65.0\ \text{lb/ft}$$

$$K = 0.2$$

$$\delta = 0.5\ \text{in/blow}$$

$$R = \left[\frac{2P \times (W_r + K W_p)}{s(W_r + W_p)}\right]\left[1 + \sqrt{1 + \frac{W_r(W_r + W_p)}{K W_p P}}\right]$$

$$= \left[\frac{(2)(1.0)(40.0)}{(0.5)(1.0 + 0.2)}\right]\left[1 + \sqrt{1 + \frac{(1.0)(1.0 + 0.2)}{(0.2)(1.0)(40.0)}}\right]$$

$$= \frac{(2)(1.0)(40.0)}{(0.5)(1.2)} = 66.67\ \text{kips}$$

Equation 10-9 is used in several building codes and transportation agency specifications for predicting the ultimate load capacity of bulb piles.

$$P_u = \frac{W \times H \times E \times N^{0.1}}{s} \qquad (10\text{-}9)$$

where P_u = ultimate load capacity (kips)

W = weight of hammer (kips)

H = height of drop (ft)

E = hammer efficiency (0.8 for single-acting hammers, 0.9 for double-acting hammers)

N = number of blows per cubic foot of penetration resulting from the last foot of driving

s = unrecovered volume of penetration in last foot of driving (in.)

λ = dimensionless constant depending on soil type and pile material properties

Structural performance 10-8 has presented some models for estimating load capacity for a composite bulb pile in granular soil. Given these examples, in very dense sand

EXAMPLE 10-2

Calculate the ultimate load capacity of a bulb pile based on the following data:

Hammer weight = 3 kips

Height of drop = 2.0 ft

Volume of soil displaced per foot = 0.5 cu ft

Number of blows to drive last foot = 40

Volume of bulb = 0.5 cu ft

Efficiency factor = 0.9

SOLUTION

[illegible]

A reservoir [illegible] is positioning pile is partly [illegible] by the use of [illegible] optimization, which [illegible] the [illegible] and velocity [illegible] [illegible] [illegible] driving. Jerry's [illegible] the analysis is [illegible] [illegible] [illegible] driving [illegible] and the expected soil [illegible]. [illegible] [illegible] [illegible]

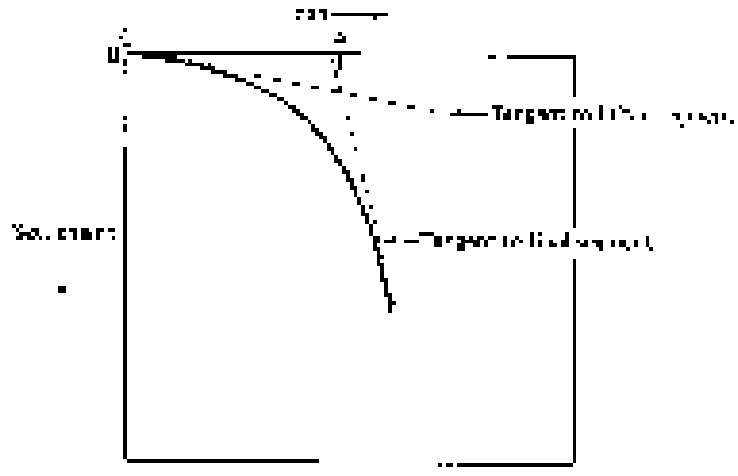

Figure 10–9 Determination of pile capacity from load test.

The maximum safe pile load capacity is the appropriate ratio of safety must be applied to the ultimate pile capacity. The factor of safety to be used will depend on soil pile properties and the loading conditions to be encountered. However, a minimum factor of safety of 2.0 is usually employed.

The capacity is usually increased when a certain time following driving. This increase in capacity is attributed to a soil regain of soil strength. However, in some cases pile capacity decreases with time. Such increases and decreases in functional soil properties, soil strength or soil resistance can be measured by performing load tests on the pile several days after pile driving. Pile driving delays usually allow a minimum waiting period between driving and loading the pile.

10–4 PIERS AND CAISSONS

A pier is simply a column, usually of reinforced concrete, constructed below the ground surface. Piers transmit the load from the superstructure, through the column, to a stronger soil layer. Piers may be constructed in open excavations, a lined excavation (caissons), or drilled cylindrical holes. Since piers are constructed by filling a cylinder with concrete, the term pier foundation, caisson foundation, and drilled pier foundation are interchangeably used.

A caisson is simply an open or pneumatic box or open to a cylinder or Caisson is may be an open or pneumatic. The main components are the cutting edge, the open space below the cutting edge, and the construction of soil cover. The caisson is filled with concrete, prevent water or soil from coming in and excavation process. The caisson is removed from after its form the bottom open or the caisson is removed

[illegible]

[illegible]

[illegible]

[illegible]

10–5 STABILITY OF EXCAVATIONS

Slope Stability

[illegible]

[illegible]

[illegible]

[illegible]

[illegible]

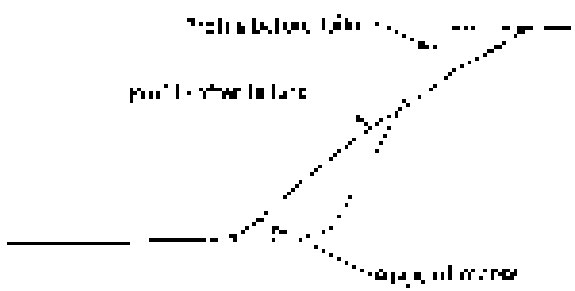

Figure 10–10 Slope failure of cohesionless soil.

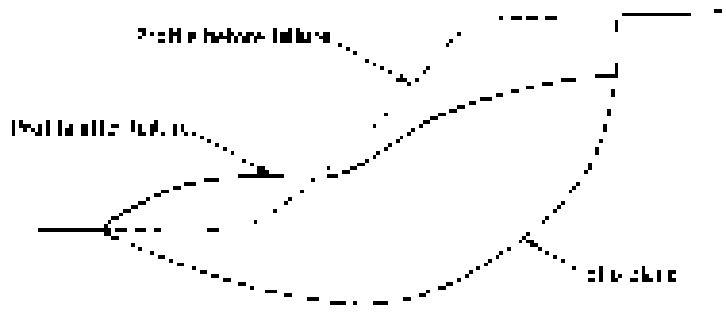

Figure 10–11 Slope failure of cohesive soil

which we can rationalize. The actual slope of the soil in a cut is some mobilized fraction of an ultimate value, which is a function of the cohesive soil strength, the soil stiffness, and the cohesion.

Embankment Failure During Construction

Most soils exhibit an increase in strength with consolidation. Thus, a cohesive soil embankment, when first placed, may have a low strength, but as it consolidates under its own weight, its strength increases. Consequently, the factor of safety may be low at first but increase with time. Thus, the critical condition for an embankment is usually at the end of construction. Because soil properties vary widely, it is difficult to predict the factor of safety with any degree of accuracy. In particular, it is difficult to predict the initial shear strength of the soil in the embankment. Thus, it is important to monitor the embankment during construction. If the embankment is being constructed on a cohesive soil, the factor of safety may be increased by placing the embankment in several stages, allowing the soil to consolidate between stages. Sometimes, the embankment is constructed on a cohesive soil that is very soft. In such cases, the stability of the embankment may be increased by placing a stabilizing berm at the toe of the embankment. The berm acts as a counterweight to the embankment, increasing the factor of safety against a slope failure

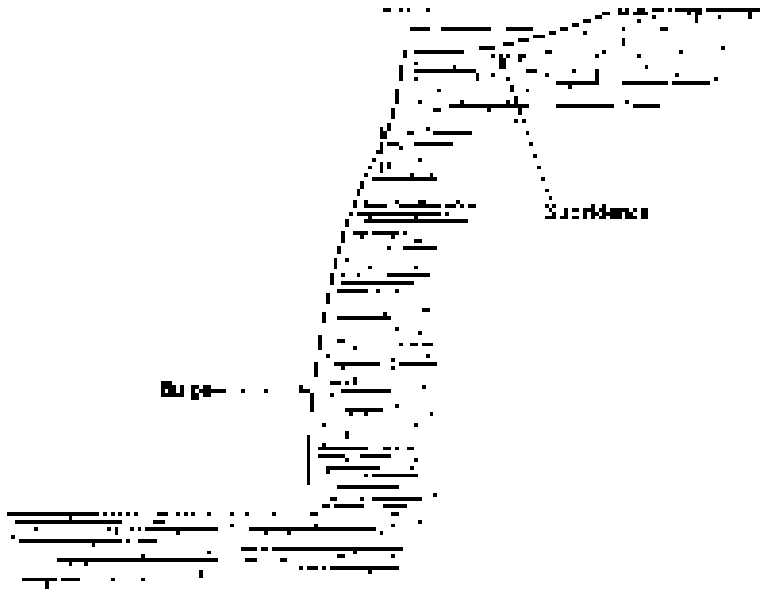

Figure 10-12 [illegible]

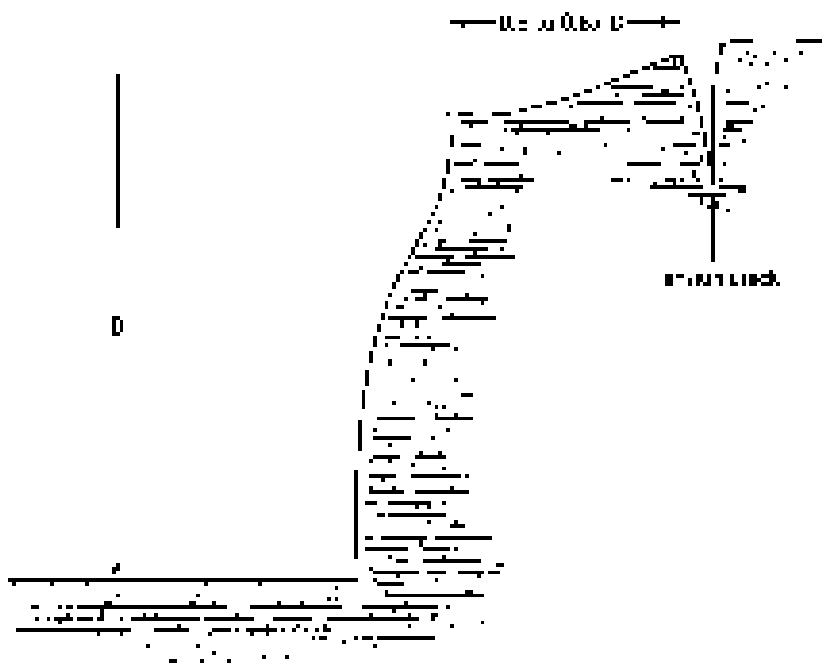

Figure 10-13 [illegible]

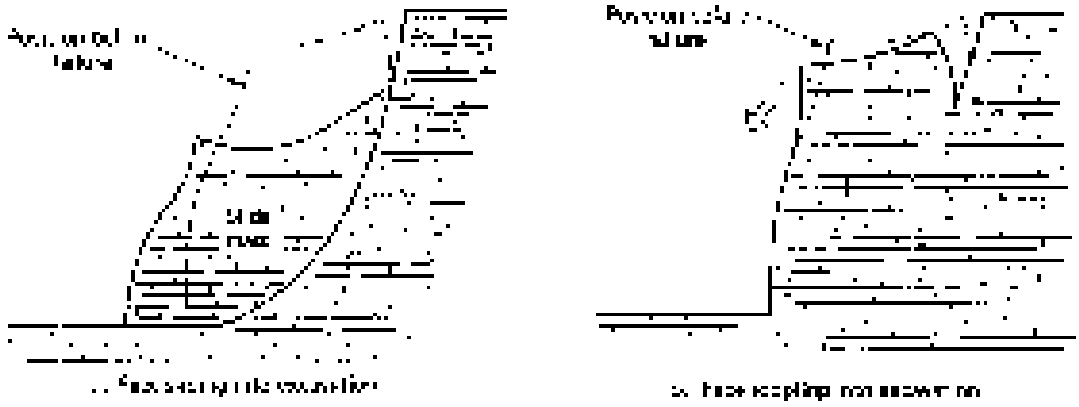

Figure 10–14 Modes of embankment failure

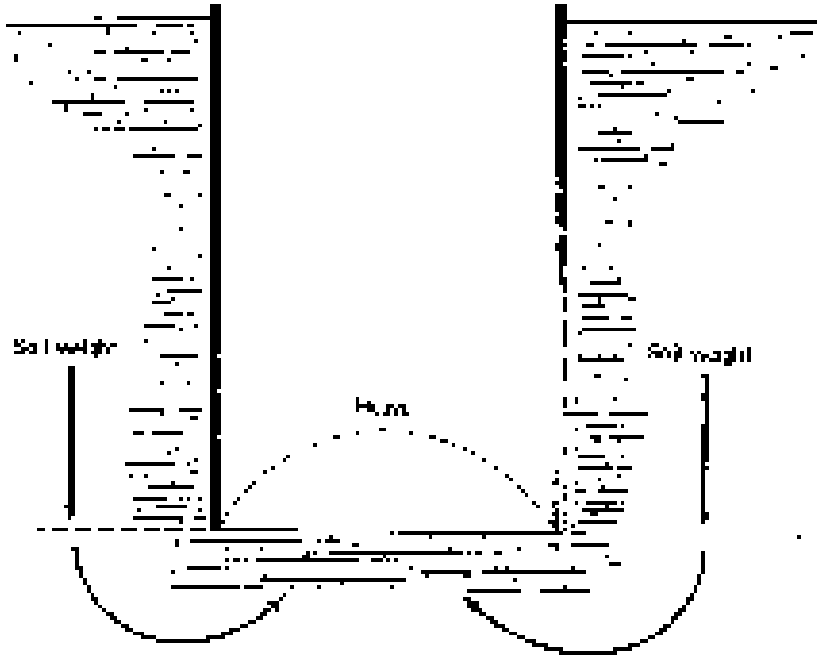

Figure 10–15 Heaving of an [illegible]

[illegible]

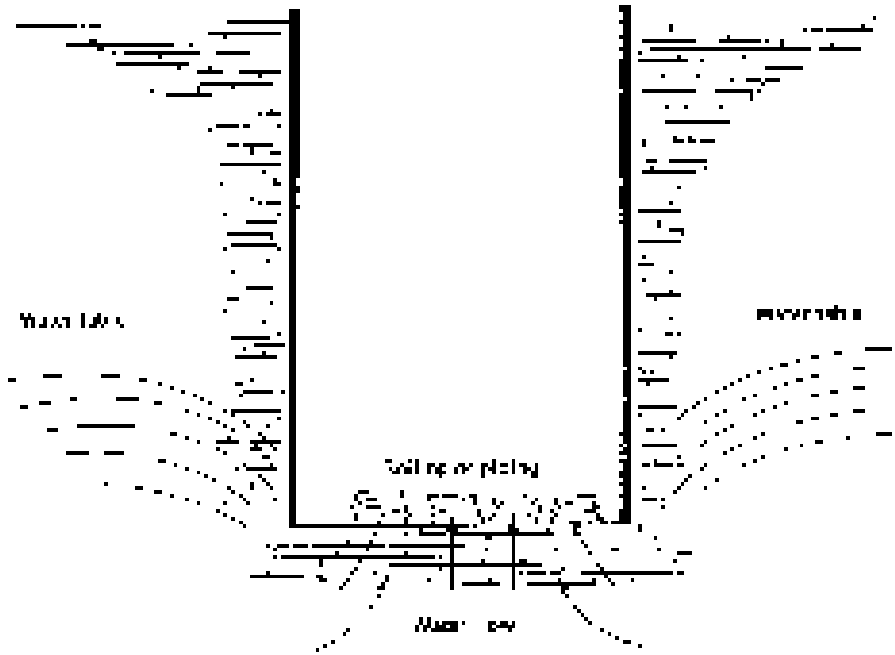

Figure 10–16 Internal piping channel system

the soil. This may result from one of several different conditions. If the water pressure exceeds the soil weight, the soil will behave like a quicksand and have a condition called liquefaction or quicksand. In a quicksand, the soil suspension applies a force to the soil particles. If the water pressure is strong enough to move sand particles through the bottom of the soil, this condition is called boiling or piping. Such movement of soil often leads to failure of the surrounding soil. The following section discusses the failure of some dams and levees.

Preventing Embankment Failure

As the result of the increased economical slope, failure of embankments will occur more frequently than in the past. Such failures, side slopes may result in sudden collapse. Such an event equal or exceed the strength of the soil by providing lateral support. In the excavation as discussed in Section 10-4, both side and bottom stability may be increased by developing the soil surrounding the excavation. Methods for developing such protection, excavations are described in the following section.

In general, an embankment slope failure is a gradual, resulting with a sudden event. Stress in a cohesive soil may be strengthened by increasing the drainage resistance along the potential slip plane. This may be done by drainage wells or the stone columns. The soil resists the potential slip plane. Another technique for modified the slope is called soil nailing. The formation of this method is known and is called soil nailing. Reinforced Earth. A reinforced slope [illegible] minimum, improves embankment high results on high embankment which, elements in a single [illegible]. The embedded

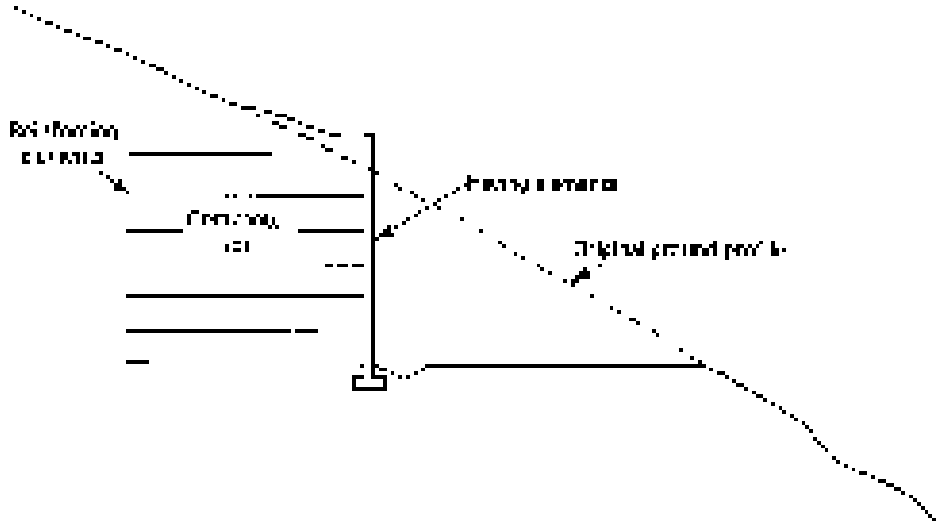

Figure 10-17 Soil nail retaining wall

vertical elements are attached to facing material, usually a concrete or timber, to prevent erosion or sloughing of soil between the surface. Soil reinforcement is often incorporated in cut-and-fill slopes, such as the construction of earth-reinforced retaining walls.

10-6 PROTECTING EXCAVATIONS AND WORKERS

Excavation work is responsible for the greatest number of U.S. construction fatalities, accounting for over 300 deaths during a typical year. In response to the hazards and safety concerns in excavations, OSHA has established a number of safety regulations for employees working in excavations. Work may be possible in several planning stages and in excavation through the use of construction equipment (see Chapter 20). In most cases, workers must wear the necessary and OSHA regulations will apply. These regulations require, among other things, that workers in excavations be protected from cave-in by one of the following methods:

- Sloping or benching of the sides of the excavation.
- Supporting the sides of the excavation by shoring.
- Placing a shield between workers and the sides of the excavation.

The only exceptions to these requirements are when the excavation is made entirely in stable rock or the excavation is less than 5 feet (1.5 meters) in depth and examination of the ground by a competent person provides no indication of a potential cave-in. As defined by OSHA, competent persons are those capable of identifying existing and predictable hazards in the surroundings or working conditions which are unsanitary, hazardous, or dangerous to employees, and who has authorization to take prompt corrective measures to eliminate them.

Table 10.1 OSHA soil and rock classification system

Stable Rock	Type A	Type B	Type C
Stable rock is natural solid mass that can be excavated with vertical sides and remain intact while exposed.	Type A is cohesive soil with an unconfined compressive strength of 1.5 tsf (144 kPa) or greater. Examples of cohesive soils are clay, silty clay, sandy clay, clay loam, silty clay loam, sandy clay loam and other soils classified in the unified soil classification system as CH, CL, or MH. Cemented soils such as caliche and hardpan are considered Type A soil. • If soil is fissured or • If soil is part of a stratified system where layers dip into the excavation on a slope of 4 horizontal to 1 vertical or greater • If soil has been previously disturbed or • If soil is part of a system exposed to vibration from vehicles, blasting, or other sources that would reduce the soil's ability to withstand cave-in • If soil would require the use of other means that would require the use of other than a sloped or stepped system	Type B is cohesive soil with an unconfined compressive strength of greater 0.5 tsf (48 kPa) but less than 1.5 tsf (144 kPa). Examples of Type B soil are angular gravel, silt, silt loam, sandy loam, and other soils classified in the unified soil classification system as ML, SM, or SC. • Granular cohesionless soils including gravel, sand, and loamy sand are classified as Type B soil. • Previously disturbed soils except those which would otherwise be classified as Type C soil. • Soil that is part of a stratified system where the layers dip into the excavation on a slope less than 4 horizontal to 1 vertical but in no case steeper than 4 horizontal to 1 vertical if the layers are free of fissures. • Dry soil that will not flow or run if it is exposed. Layered systems where the layers dip into the excavation or have a slope of four horizontal to one vertical but in no case steeper than four horizontal to one vertical shall be classified as Type B soil.	Type C is cohesive soil with an unconfined compressive strength of 0.5 tsf (48 kPa) or less. Examples of Type C soil are granular soils including gravel, sand, and loamy sand. • Soil from which water seeps or is present. • Any soil that has been previously disturbed. • Layered systems where the layers dip into the excavation or have a slope of four horizontal to one vertical or greater. • Manufactured materials, layered systems where the layers dip from the excavation or have a slope of four horizontal to one vertical or greater.

Trench work with Type A or Type B soil requires sloping, benching, and shoring, or it must be protected with the OSHA Soil and Rock Classification System shown in Table 10.1. Table 10.1 shows the system, soil and rock are classified as Stable Rock, Type A, Type B, or Type C.

Sloping and Benching

Under OSHA rules, when workers are required to be in an excavation, the maximum allowable angle of repose of the sides of the excavation depends on the soil type, as shown in Table 10.2. However, most excavations are shored in the close to the earth.

The requirements for benching or sloping of excavation sides depend on the type of soil and the depth of the excavation, as shown in Table 10.3. Benching or sloping of excavation sides greater than 20 ft (6.1 m) requires an engineered protective system. The major disadvantages of sloping or benching of excavation sides is the space required for the excavation plus side slopes.

Table 10-2 (OSHA maximum allowable slopes for excavation sides, from "Federal Register," vol. 1926, Title 29, Chapter XCII)

Soil or Rock Type	Maximum Allowable Slope (H:V) for Excavations Less Than 20 ft (6.1 m) Deep
Stable Rock	Vertical (90°)
Type A	3/4:1 (53°)
Type B	1:1 (45°)
Type C	1½:1 (34°)

Vertical cut (24 in. [60 cm] maximum) is allowable in any soil if less than 4 ft (1.2 m) deep. Small excavations in stable rock are allowed to be vertical regardless of depth. Excavations in stable rock to 30 ft (9.1 m) deep.

Shoring and Shielding

Trench support for trenches or excavations is usually provided by shoring. Shoring systems vary from complete, well-engineered systems to casually constructed, ad hoc arrangements. Some trenches, especially those in poor soil, will not necessitate shoring. Such trenches are referred to as self-supporting. Common types of shoring systems include timber, steel, and aluminum. Trench shoring systems are sometimes called shields. Shoring and shielding systems must be installed in compliance with OSHA rules. Manufacturers' instructions and drawings are designed to be used as guidelines in installing them.

Timber shoring (figure 10-18) is composed of vertical members (posts) and horizontal members (stringers) that support the sides of the excavation. Stringers are placed at intervals. Large timbers are used

Figure 10-18 Timber shoring system.

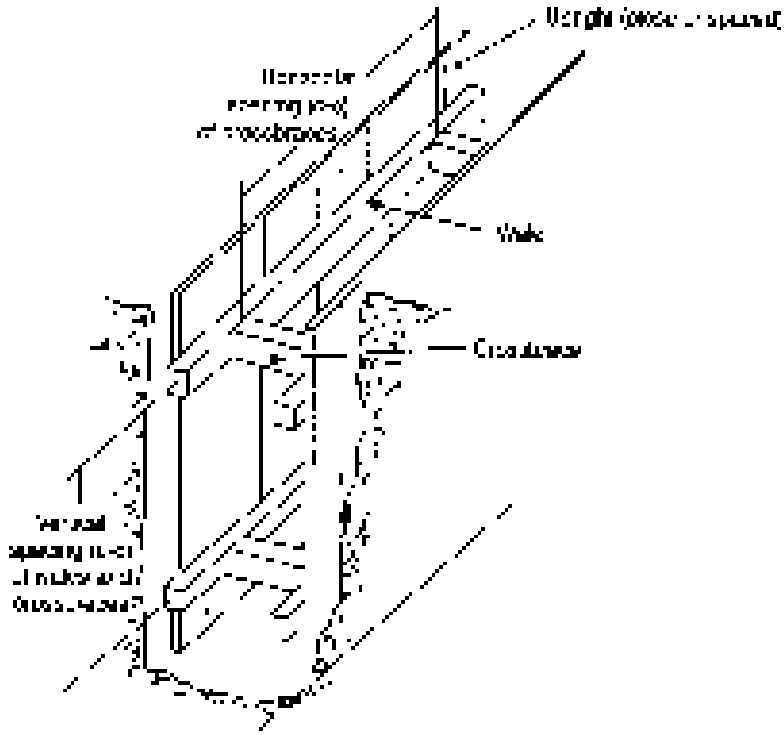

Figure 10-19 Aluminum cylinder bracing system.

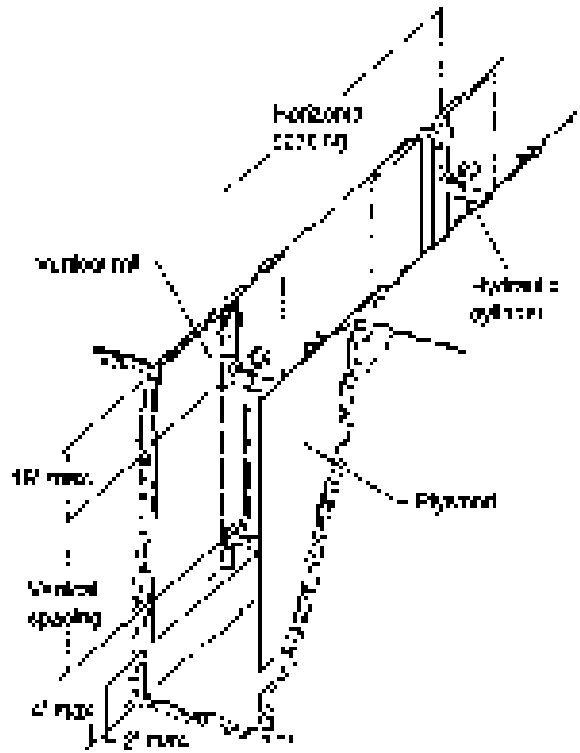

[illegible] horizontal braces called [illegible] are supported by horizontal [illegible] and jacks. While concrete is being poured, [illegible] is called a tube-and-strut.

Alternate bracing systems shown in Figure 10-19 simply provide [illegible] walls to [illegible] hydraulic cylinder. [illegible] plywood sheet may be placed in the vertical upright as shown to increase [illegible] of support for the horizontal sides. Another arrangement [illegible] sheeting supported by [illegible] aluminum walers with vertical hydraulic cylinder [illegible]. In this case, the shoring system [illegible] in the [illegible] shown in Figure 10-18.

Lagging is sheeting [illegible] placed horizontally. However, in this case [illegible] called a double-[illegible] system. [illegible] lagging system [illegible] piling, with the lagging placed between the [illegible] piling. Walers and struts or braces [illegible] support.

Sheeting is [illegible] steel [illegible] pile or sheet piling is used for [illegible] and [illegible]. Two [illegible] walls may be constructed parallel to each other [illegible] and filled with [illegible]. When right sheeting or sheet piling is used, the shoring system must be designed [illegible] the full hydrostatic pressure of the groundwater level [illegible] weep holes [illegible] provided in the shoring system.

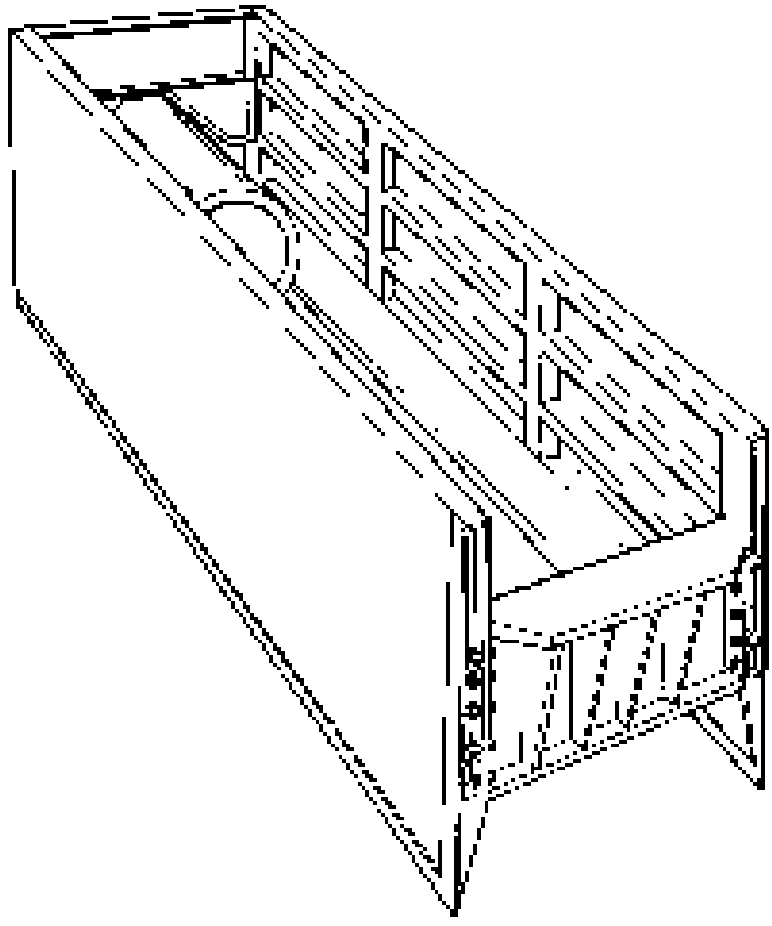

Figure 10–20 Trench shield.

Trench shields are used in place of shoring to protect workers during excavation operations. Figure 10–20 illustrates such a movable structure. The top of the shield should extend above the sides of the trench to provide protection to workers against cave-ins falling from the sides of the trench. The trench shield is pulled along by an excavator as work progresses.

Slurry Trenches

A relatively new development in excavation and trenching is the construction of slurry trenches. This technique is illustrated in Figure 10–21. A slurry is a thick mixture of water and [illegible] soil is removed. The slurry serves to keep the sides of the trench from caving in due to excessive [illegible]. Maintaining a [illegible] above the water table is essential to a stable trench. After completion of the trench, the slurry is displaced by concrete poured

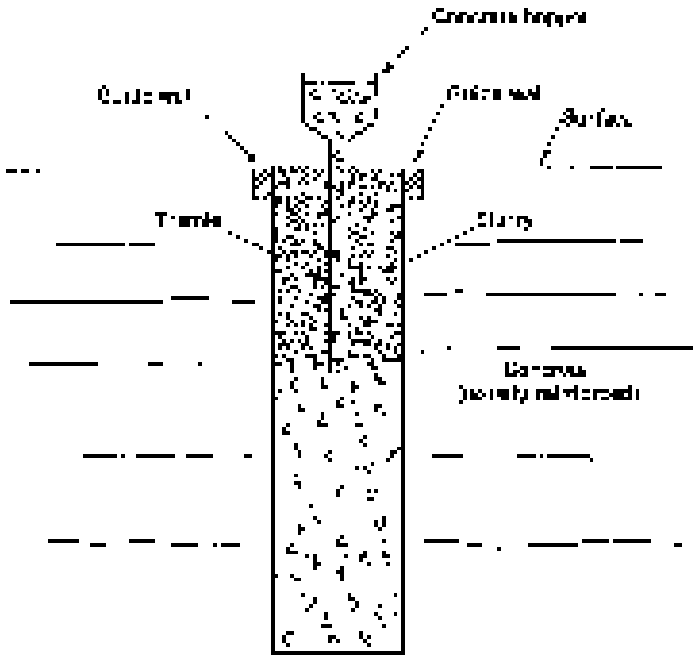

Figure 10-21 Slurry trench construction.

through the slurry by use of a tremie. The slurry is pumped away as it is displaced. The slurry trench interpenetration joins the successive excavations and dewatering excavations. The soil between two rows of overlapping slurry trenches may be excavated by the same dewatering methods as those mentioned.

10-7 DEWATERING EXCAVATIONS

Dewatering is the process of removing water from an excavation. Dewatering can be accomplished by lowering the groundwater table before the excavation is begun. This method is often used in porous, pervious, or sandy soils in high groundwater levels. Alternatively, excavations may be made dry. Dewatering and water seepage compensation of the excavation work proceeds. Within the protection, the soil in the excavation is permanently dewatered. The dewatering methods depend on the water level and ground slope in relation to the excavation. The water table may come to rest in the soil in the excavation area. This can lead to differential settlement of nearby structures in form of buildings and the excavation area.

The selection of a suitable dewatering system depends on the nature of the excavation and the permeability of the soil. Soil permeability is the ease with which water flows through the soil. It is primarily a function of soil size and size distribution. It has been found that the diameter of the soil pores varies with the size of the soil grains. Thus, 10% of soil sizes are smaller than the designated size. This is an effective measure of soil permeability. The soil should be tested for its effective size.

Table 10–3 Approximate dewatering methods

Effective Grain Size (D_{10})	Dewatering Method
Larger than 0.1 mm	Sump pumping and gravity
0.1–0.001 mm	Vacuum wellpoints or wellpoints
0.01–0.001 mm	Electroosmosis

[illegible]

[illegible] D_{10}. Table 10–3 [illegible] dewatering methods [illegible] soil grain size. [illegible] gravity [illegible] of pumps and wellpoints [illegible] effective grain size [illegible] 0.1 mm [illegible] 0.01 [illegible] size, [illegible].

Wellpoint Systems

Figure 10–[illegible] the use of a [illegible] wellpoint system [illegible] excavation. [illegible] wellpoints [illegible] the bottom of the [illegible] pipe [illegible] the well [illegible] the [illegible] pipe for a well. In [illegible] the [illegible] pipe [illegible] the [illegible] of a [illegible] wells. In [illegible] the [illegible] to [illegible] wellpoints [illegible] the [illegible] by [illegible] through the [illegible] and wellpoints to [illegible] the [illegible] conditions [illegible] the [illegible] since [illegible] the [illegible] the [illegible] wellpoints [illegible] the [illegible] pipe [illegible] the [illegible] pipe [illegible] pump [illegible] water [illegible] the [illegible] water [illegible] by [illegible] a [illegible] the [illegible] the [illegible] lift [illegible] the [illegible] is [illegible] the [illegible] the [illegible] is [illegible] 20 ft [illegible] m) [illegible] the [illegible] wellpoints [illegible] spaced [illegible] m [illegible] m [illegible] wellpoints [illegible] the [illegible] flows [illegible] from [illegible] to [illegible] wellpoint [illegible] wellpoints [illegible] the [illegible] and [illegible] the [illegible] to [illegible] the [illegible] in [illegible] the [illegible] than [illegible] of [illegible] wells [illegible] to [illegible] In [illegible] levels of [illegible] stages [illegible] the [illegible] of [illegible] the [illegible] the [illegible] the [illegible] the [illegible] the [illegible] the [illegible] of [illegible] and [illegible] of [illegible] to [illegible] the [illegible] wellpoint [illegible] the [illegible] wellpoint [illegible] and [illegible] water from the wells. Figure [illegible] shows an electrically powered [illegible] with [illegible] and [illegible] well

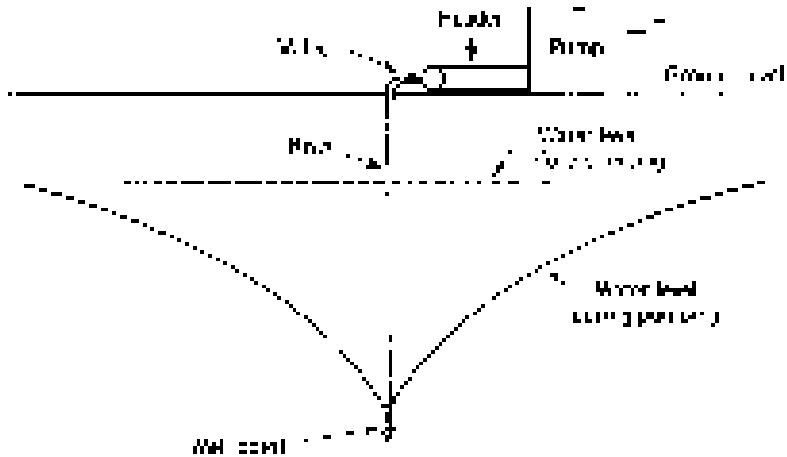

Figure 10-22 Wellpoint dewatering system.

Vacuum Wells

Vacuum wells are wellpoints that are installed in a similar way, placed in a line, alternately or concentrically in a well-field. A vacuum pump is then connected to the header pipe. The resulting underground pressure lowering the well and increasing groundwater velocity and the flow of water into the well. In fine-grained soils, it may be necessary to place a sand filter around the wellpoint and riser pipe.

Electroosmosis

Electroosmosis is the process of accelerating the flow of water into a well by the application of electric current. Although the performance of electroosmotic wells has been the focus of study in the literature, early in the 20th century, it was not applied to construction dewatering until 1939. As shown in Table 10-1, the method is applicable to clayey materials such as silt and clay, and is ineffective in sand, silt, and gravel.

The most accurate for employing electroosmosis in dewatering is to space wells in a pattern of short rows (10-20 m) in which alternating rows are made up of pairs of wells. Each well is then connected to the negative terminal of a low voltage source and a pump is connected to a positive terminal. A voltage of 3 to 4 Volt (4.5 to 12 Volt) is then applied between the wells and anodes. In order to limit the current, a resistor is placed between the well and anode. Excessive power results in heating. Typical current requirements are 10 to 20 A per well, with power demands of 15 to 30 kW per well.

A measure of the effectiveness of electroosmosis can be gained by comparing the flow developed by an electrical voltage with the flow produced by conventional hydraulic forces. Field calculations show that by an average permeability, indicating that one volt per meter of Volt (10 V/m) is equivalent to hydraulic gradient of 0.01 (1:100). Thus, using a hydraulic gradient of 50 to 1, for the case of vacuum wells, would cause wells to be

Figure 10-23 Electrically powered submersible pump being placed into dewatering well. (Courtesy of Layne-Pumps and Systems)

spaces above the water table. This calculation also determines the amount of water to be added to increase the water flow, establishes a new pattern of flow, summarizes over the flow pathway by one-dimensional layers in the method.

10–8 PRESSURE GROUTING

Grouting or pressure grouting is the process of injecting a grouting agent into a soil mass to increase its strength or stability, prevent foundations, or reduce seepage and flow. Grouting of soils is widely employed in civil construction and industry. The movement of grout through is controlled by combining with the desired viscosity, setting and strength characteristics in test tubes. Pressure gauges or measure the rate of water through injection pipes which have been placed and sealed into drill holes may also be employed as a measure of the need for grouting and for measuring the effectiveness of grouting. Recent technological improvements and innovations have led to a wide range of grouting agents and methods for soil improvement and stabilization of granular soils.

Common grouting patterns include chemical grouting, cement grouting, and special grouting. Chemical grouting involves a large horizontal area, usually between 1 and 3 m or less. Cement grouting produces a linear deep cement wall or grout that may extend to depths of 10 to 30 m or more. It is commonly employed for dam or levee seepage control. Special grouting is a method employed for a specific purpose such as a foundation support, to fill in voids, or to provide additional foundation support.

Figure 10-24 Types of grouting. (Courtesy of Raymond Bakker Inc., Miller Company)

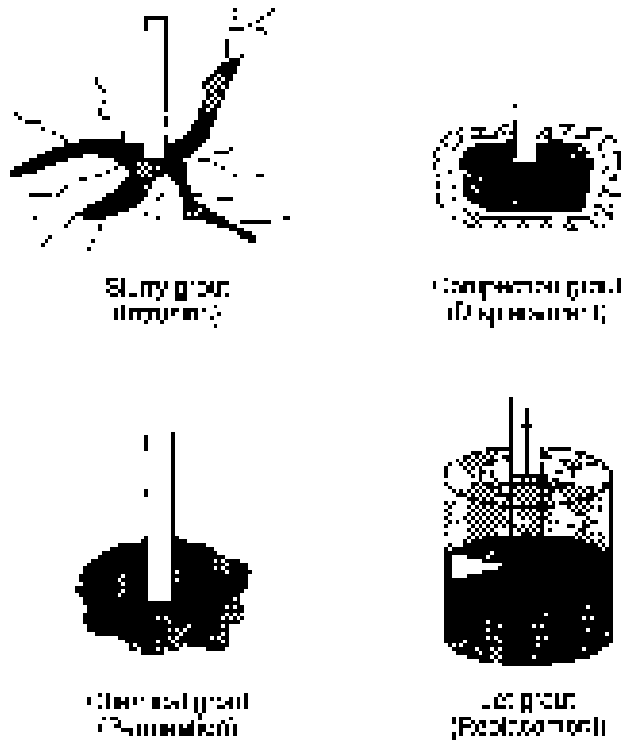

Grouting Methods

Major types of grouting include slurry grouting, chemical grouting, compaction grouting, and jet grouting (Figure 10-24).

Slurry grouting involves the injection of a slurry consisting of water and a binding agent such as cement. Common grout materials include portland cement, clay, combinations of cement and clay, and additives, such as sodium silicate, portland cement, and bentonite. These materials provide a flexible seal. Never attempt to convert an original cement grout mix to a chemical grout mix. In order to allow slurry grout to penetrate, consider the swelling of expansive clays. Clays can be used to stabilize low energy soils such as silts, loose sands, and saturated soils.

Chemical grouting involves the injection of a chemical into soil. The most popular chemical is sodium silicate, which is used in concentrations of 20 percent or less in water. The grout consists of a chemical grout and a cement mortar, just like cement or grout mixing (Miller Company).

Compaction grouting is a process of injecting low slump, stiff mortar grout into a soil mass to compact and strengthen the soil. Compaction grouting is a relatively new technique and is used to stabilize and increase the density of soils, to provide foundation support, to position

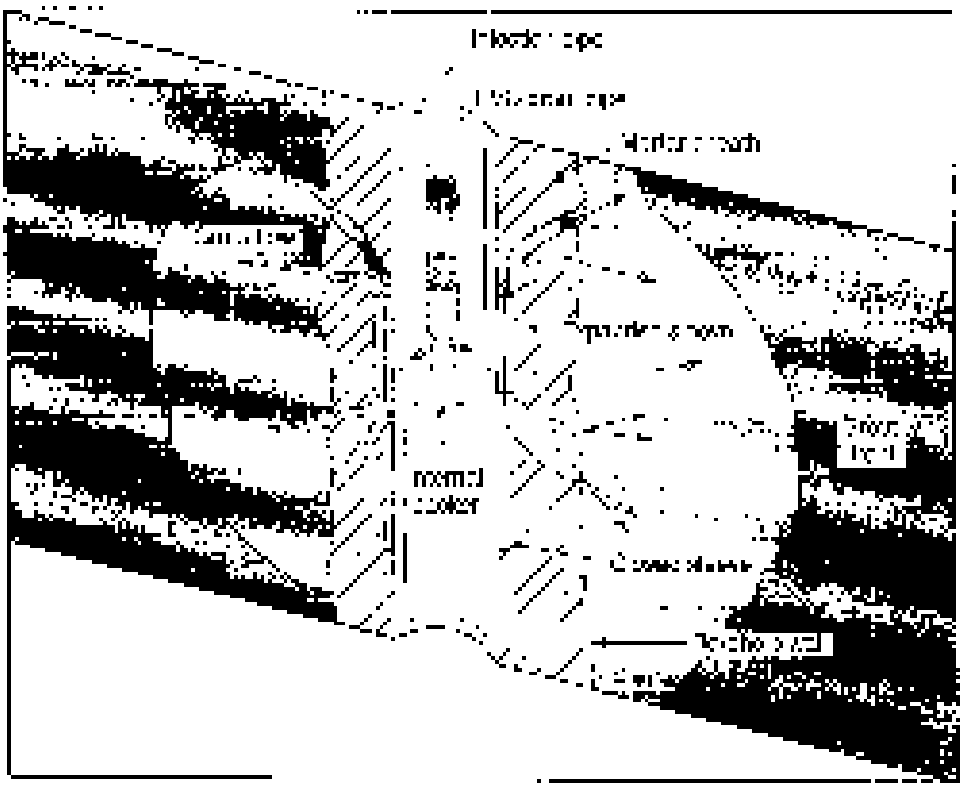

Figure 10-25 Tunneling utilizing a sleeve pipe plus. (Courtesy of Howard Baker, Inc., & Ellis Company)

quality control is used to raise jack in increments, and sensor back to each original position.

An alternative exists using jet pipe to create soil around an open pipe and a pipe [illegible] with grout. As a result, the structure is effective over a wide range of soil types and holds sand and small stones. The unconfined compressive strength of the grouted soil varies [illegible] (pp. 300).

Injection Methods

The principle underlying the injection grout is to break up the soil [illegible] and injecting a grout into the soil. Grout is used in [illegible] the [illegible] plus. Methods for injecting grout into soil include the use of [illegible] pipe, [illegible] sleeve pipe, [illegible] and jet grouting. [illegible] is illustrated in Figure 10-26. Note that the grout pipe is

[illegible] pile-driving equipment [illegible] pile pipe. The [illegible] values to allow proper [illegible] correction [illegible] prevent [illegible] the desired [illegible]

Selection of a [illegible] pile-driving equipment and pile-driving system [illegible] specialized [illegible] pile-driving specialists. The [illegible] and [illegible] will [illegible] required [illegible] pile-driving system [illegible] employed. [illegible] provide [illegible] impact [illegible] structure, [illegible] is desired.

PROBLEMS

1. Briefly [illegible] process of installing [illegible] piles.
2. Briefly [illegible] and [illegible] scope [illegible] structure [illegible] and [illegible] behavior.
3. Using Equation 10.2 and the following [illegible] determine [illegible] expressions [illegible] pile. Assume the unit weight of [illegible] is 150 lb/cu ft.

   Pile. Drive:

   Single acting compressed air hammer

   Ram weight = [illegible] lb

   Ram weight = 5000 lb

   Weight of driving equipment [illegible] = 3000 lb

   Average penetration per last blows = [illegible] in./blow

4. Briefly describe the four major types of pile-driving [illegible]
5. Briefly explain the concept of vibratory pile driving [illegible] will improve [illegible]
6. Calculate the [illegible] of a [illegible] pile [illegible] (Dp) in the process of driving [illegible] soil.
7. How does a pile surpass its [illegible] load?
8. What [illegible] the idea of the [illegible] in [illegible] maximum [illegible] be [illegible] will be 15 ft/s [illegible] will be [illegible] less than [illegible]
9. What [illegible] are [illegible] for [illegible] worker [illegible] against [illegible] it is [illegible]?
10. [illegible] in [illegible] of a pile [illegible] by a [illegible] Equation 10.3. Solve [illegible] using [illegible] and [illegible].

REFERENCES

1. [illegible] New York: Wiley, 1982.
2. [illegible] Engineering," [illegible] Advanced Structural Civil Engineering, [illegible]
3. [illegible] Design Tools, New York: McGraw-Hill, 1990.
4. [illegible] Washington, [illegible] 1977.
5. [illegible] Washington, DC.
   [illegible] NJ, 1982.
6. [illegible] of Civil Engineers, 1993.
7. [illegible] 1990, pp. [illegible]
8. [illegible] Mitchell R. [illegible] New York: McGraw-Hill, 1990.
10. [illegible] Washington, DC, [illegible]
11. [illegible] Washington, DC, [illegible]
12. [illegible] New York, 1982.

11 Wood Construction

11–1 INTRODUCTION

Wood is one of the most widely used construction materials. It is used for every type of construction: residential, commercial, and industrial buildings as well as bridges, towers, and piers, for pipelines, machinery, walls, and pavements, and in many other uses. In this chapter, for example, will be dealt with some aspects of wood. In this chapter, we will consider the properties of wood and its behavior in construction, together with the details and performance of both frame and timber construction.

11–2 WOOD MATERIALS AND PROPERTIES

Types

Wood is divided into two major classes, softwood and hardwood, according to its origin. Softwood is produced from deciduous (leaf shedding) trees. Softwood comes from a variety of coniferous (cone-bearing) trees, which are primarily evergreens. The name "hardwood" and "softwood" indicate only one wood species may be softwood, because some softwoods are actually harder than some hardwoods. In the United States, softwood is typically used for structural purposes, which have further importance. Most of the softwood used in the United States for structural purposes is softwood.

Moisture Content

The moisture content of lumber, which is defined as the weight of moisture in the wood to the weight of the oven-dry wood, is expressed as a percentage. It has a great influence on the strength properties of lumber. Lumber with 20% or more moisture is essentially in a saturated state and is subject to shrinkage and deterioration. A moisture content below 20% would be desirable to maintain properties of lumber. For example, the bending strength of

[illegible]

Structural Wood

[illegible]

Strength

[illegible]

Wood Preservation

[illegible]

to protect material from utility poles. Wooden poles are usually treated with pentachlorophenol, ACC, or creosote. Lumber, plywood, and veneer are now the principal wood products used for the framing components of residential and commercial buildings. These products include lumber, plywood, and veneer. Wood products should be used only for above-ground applications or are commonly protected from liquid water. Structural composite lumber (SCL) lumber is a composite wood product that is manufactured by GA, ACQ, and SBX. Structural composite lumber primarily consists of veneers, LVL, OSB, and sawnwood treated wood made at the job site. Available fields treated with copper naphthenate have a minimum of 200 mm. This section is based on American Wood Preservers Association (AWPA) standard 241.

Fire-Retardant Treated Wood

Wood treated under pressure with fire-retardant chemicals is called fire-retardant treated wood (FRTW). After treatment, the fire-retardant chemicals remain in the wood indefinitely. When the wood remains dry, it is fire-resistant. Fire-retardant treated wood is used in this section. For fire-retardant treated wood with the commonly used pressure treatment, generally a wood fire and converts them to carbon dioxide, and water. The use of fire-retardant chemicals increases the cost of wood and reduces its strength. The use of FRTW may also enhance the wood by using it in concealed spaces of wood structures. This is the following conditions. The FRTW chemicals provide additional resistance to the wood.

Glued Laminated Timber

Glued laminated timber (Figure 7.4) is composed of layers of wood (lamination) bonded together with glue to form a solid structural member. Glued laminated timber has several advantages over sawn timber. It provides a wide range of structural shapes and sizes, increased strength, since the individual wood pieces have fewer imperfections, and better durability, since they can be treated with preservatives more deeply. Glued laminated timber is a structural member of high strength. The strength of glued laminated timber is increased by placing high strength lumber in the tension and compression zones and lower strength lumber in the core of the member. The number of glued laminated timber members is generally determined structural member of high strength and minimum.

Glued laminated timber is used in many buildings, such as churches and auditoriums, sleeping porches, and garage doors, as well as in industrial plants. The allowable stress values are shown in Figure 7.3 for a dry service of 240 mm (9 in). Glued laminated timber is used for the design of a pre-stressed concrete beam. The design provides data, such as allowable stresses, for glued laminated timber.

Plywood

Plywood is a wood structural material formed by gluing layers of wood together (veneers) together with the grain of one layer running perpendicular to the other.

Figure 11–1 [illegible] Timber Beam. (Courtesy of American Institute of Timber Construction.)

This process results in a material having much strength in the direction of the grain but very little strength and stiffness across the grain. Grading rules established by APA—The Engineered Wood Association define wood veneers in groups based on strength and stiffness with grade having the highest weight characteristics in relation to the base. Extensive and minor types of defects are allowed. Typical defects are knots and knot holes, splits, and minor type of defects. Defects are allowed in the veneer in relation to the veneer's proportional to its grading grade. Exterior-grade plywood is manufactured with waterproof glues and higher grade veneers than those used for interior-type plywood.

Surface veneers grades of N, A, B, C, and D are available, with grade N being the highest grade and grade D the lowest. Plywood is manufactured in two grades: Structural I and Structural II. Structural I is not usually available. Type-Exterior—Plywood is APA (APDA) and Marine Density Overlay (MDO) plywood are manufactured with waterproof glues and higher grade veneers than those used for interior-type plywood. Plywood with a wash coat, primer, or other special treatment is available for siding and other applications. Plywood is manufactured in many standard sizes. The usual size of plywood sheets in the United States is [illegible] ft by [illegible] ft. Plywood is available with various thicknesses and grades for use in the construction industry. Plywood design specifications are given in reference [illegible]. Typical applications and construction details are described in reference [illegible].

Figure 11-2 Cutting large-sized laminated timber arches. (Courtesy of American Institute of Timber Construction)

Other Wood Products

Faced with a declining supply of large-sized growth timber, the U.S. forest industry has developed a number of wood products to replace lumber and timber. These products are made from pieces of lower quality wood which would otherwise produce higher quality wood products. Such products are often referred to as engineered wood products. Under these products include laminated veneer lumber (LVL), parallel strand lumber (PSL), laminated strand lumber (LSL), plywood, oriented strand board, and wood composites.

Laminated veneer lumber is made up of plywood layers. Veneers are glued together to form a lumber. LVL is multiple layers of plywood, usually 1/8 inch thick, glued together to form a large piece of lumber. LVL is available in lengths up to 20 feet (6.1 m) and widths up to 48 inches (122 cm). LVL is used for beams and decorative elements.

Glued-laminated timber consists of pieces of dimensional lumber glued together to form a large piece of lumber. Glued-laminated timber can be manufactured in large sizes, up to 80 feet (24.4 m) long.

Parallel strand lumber (PSL) is produced by gluing together long strands of wood. These strands are aligned in the same direction. The strands are then glued together to form a

[illegible] and pressure [illegible]. The process has [illegible] the [illegible] and is [illegible] in the [illegible].

Laminated strand lumber is produced by a process similar to that used for [illegible] strand lumber but uses [illegible] about [illegible] in (38 mm) long. After being coated with adhesive, the strands are pressed by the [illegible] continuous injection pressing process.

Plywood panels are produced in sheets by bonding [illegible] together. [illegible] panel size is [illegible] Total thickness [illegible]

Plywood is similar to [illegible] and is manufactured [illegible] major wood corps.

Oriented strand board is built up in layers [illegible] plywood. However, each layer [illegible] strand boards [illegible] to the result.

11–3 FRAME CONSTRUCTION

Frame construction utilizes small dimensional lumber [illegible] in conjunction with posts, and [illegible] to form the ordinary frame. Framing members are usually [illegible] nominal dimensions. This frame is then covered with siding and sheathing of plywood or boards. Frame construction is widely used in the United States for single family residences as well as for small multiple family residences, offices and shops. Building codes frequently specify prescriptive or minimum dimensions to be used in frame construction [illegible] and [illegible] in the absence of special code requirements. The two principal forms of frame construction, platform and balloon frame construction, are discussed here.

Platform Frame Construction

Platform frame construction is illustrated in Figure 11–2. In this type of construction, the subfloor is built by nailing [illegible] to the underside of the building and provides support for the floor joists of the building [illegible]. The method of framing is widely used because it provides a great working platform at each level, speeds construction and also permits the use of thick wall coverings [illegible] the subfloor is complete.

The principal framing members are identified in Figure 11–3. [illegible] are supported by sills placed on top of [illegible] walls, and [illegible] stiffeners in the walls. Wall panels are [illegible] plates for [illegible] and top plates. Double top plates are used for bearing walls [illegible] floor or roof joists.

Balloon Frame Construction

In balloon frame construction, [illegible] walls extend all the way from the [illegible] of the second floor [illegible] as shown in Figure 11–4. The outside ends of second-floor joists

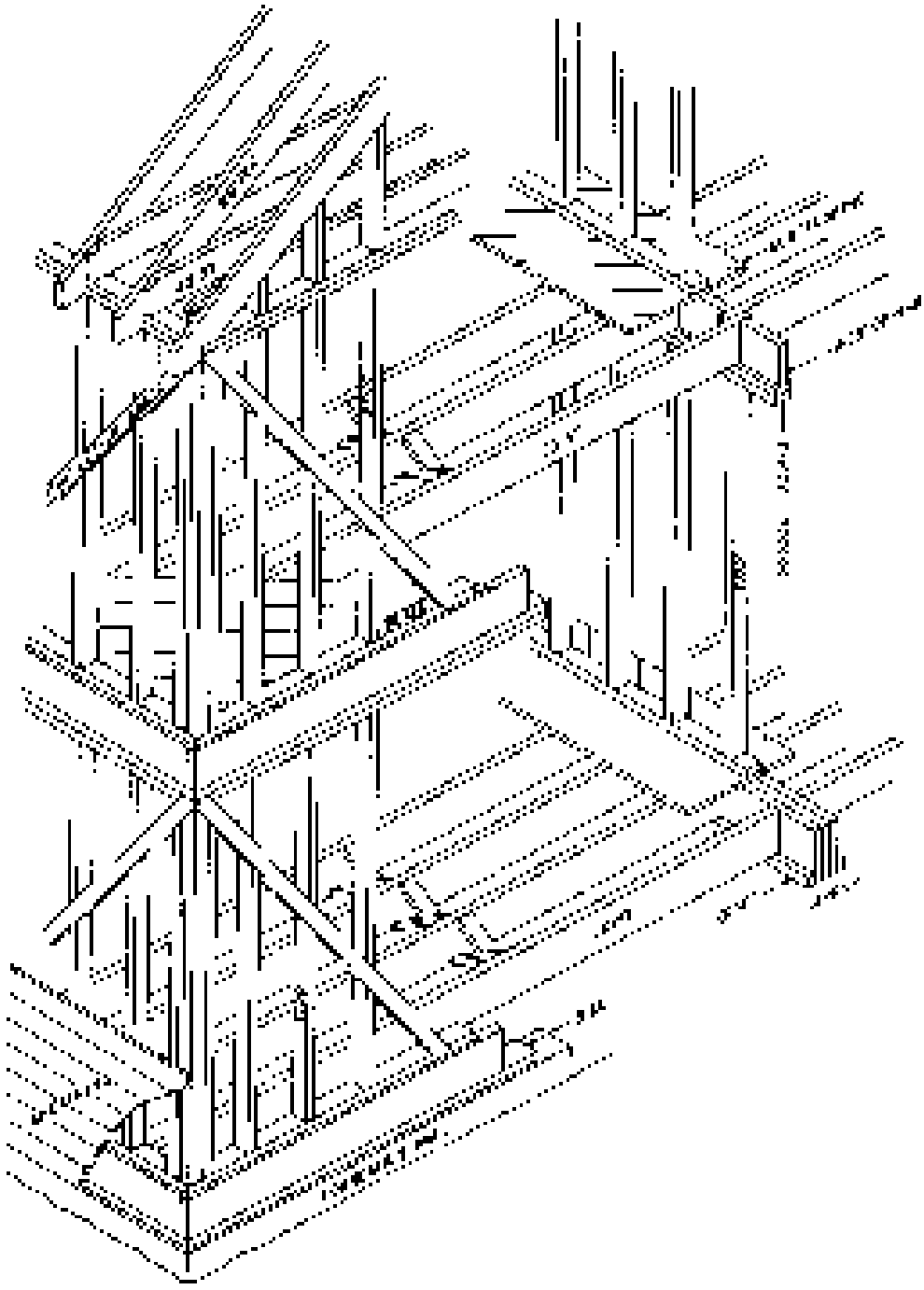

Figure 11-3. [illegible] Courtesy of American Forest and Paper Association

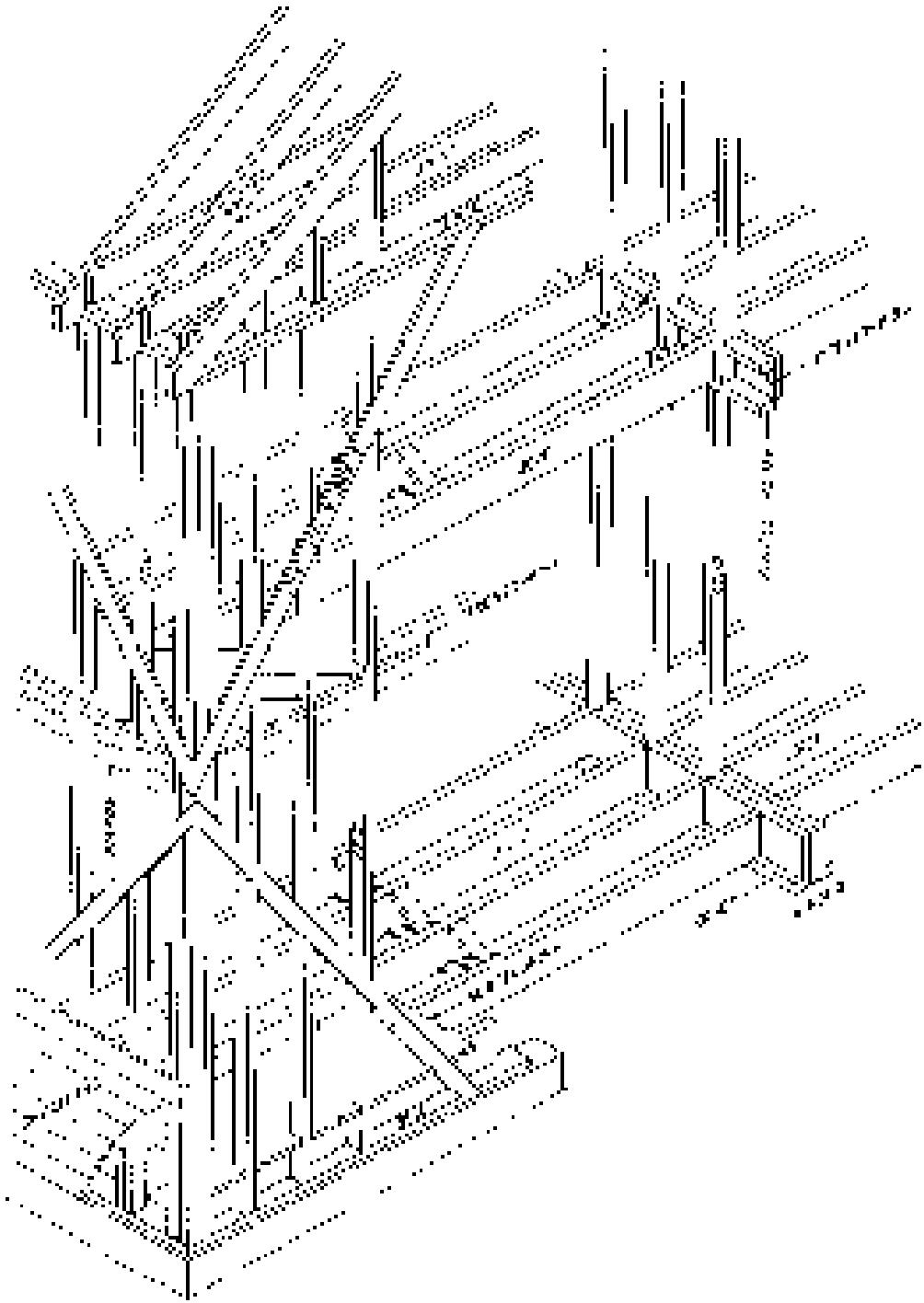

Figure 11-4 Balloon frame construction. (Courtesy of American Forest and Paper Association)

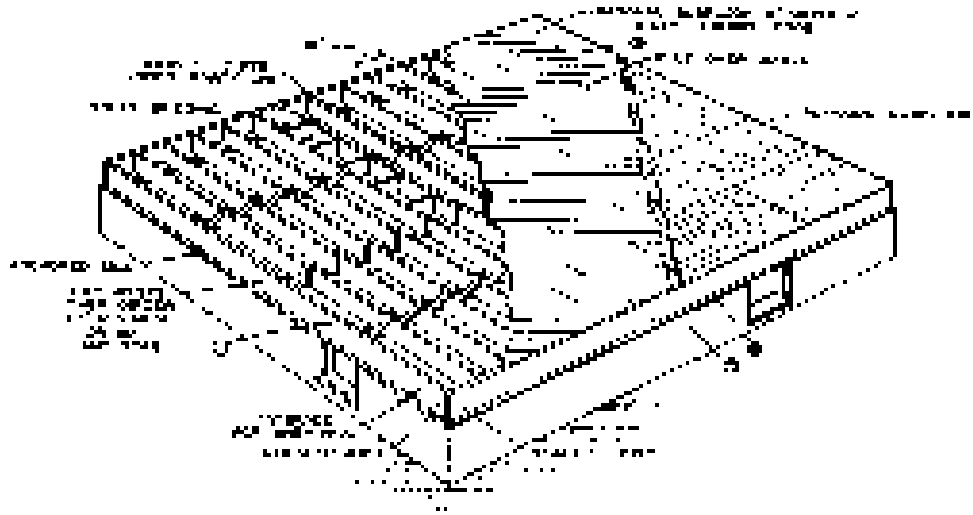

Figure 11–5 Joist framing on plate in frame construction. (U.S. Department of Agriculture.)

[illegible]

Foundation and Floor Construction

[illegible]

[illegible]

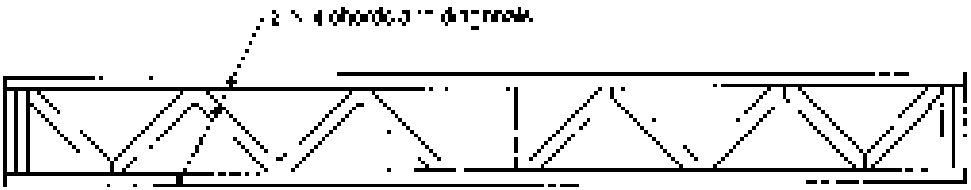

Floor Truss

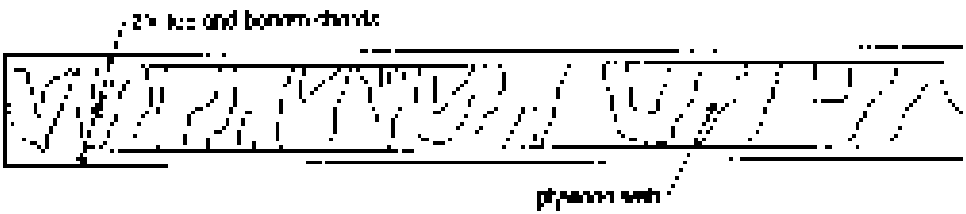

Wood I beam

Figure 11.6 Floor truss and wood I beam.

strips with 4 in (9.5 mm) gypsum board. The dimensions of floor trusses similar to those of other trusses described later in this section. Floor trusses commonly range from 8 to 24 in (20 ... 60 cm) in depth. The spacing between trusses facilitates the installation of utility lines and ducts.

Most safety considerations apply to the structural characteristics similar to those described later for roof trusses. However, floor trusses are supported by floor joists, provide a level, rigid surface for support of materials during construction, and following erection should be more rigid. Vertical deflections of floor trusses under live loads should be limited to avoid cracks in finishes and damage to floor coverings. Lateral bracing should be provided to prevent lateral movement of the top chord of floor trusses. Lateral bracing is also required to stabilize the bottom chord of floor trusses. Lateral bracing is also required to stabilize the bottom chord of floor trusses. Lateral bracing is also required to stabilize the bottom

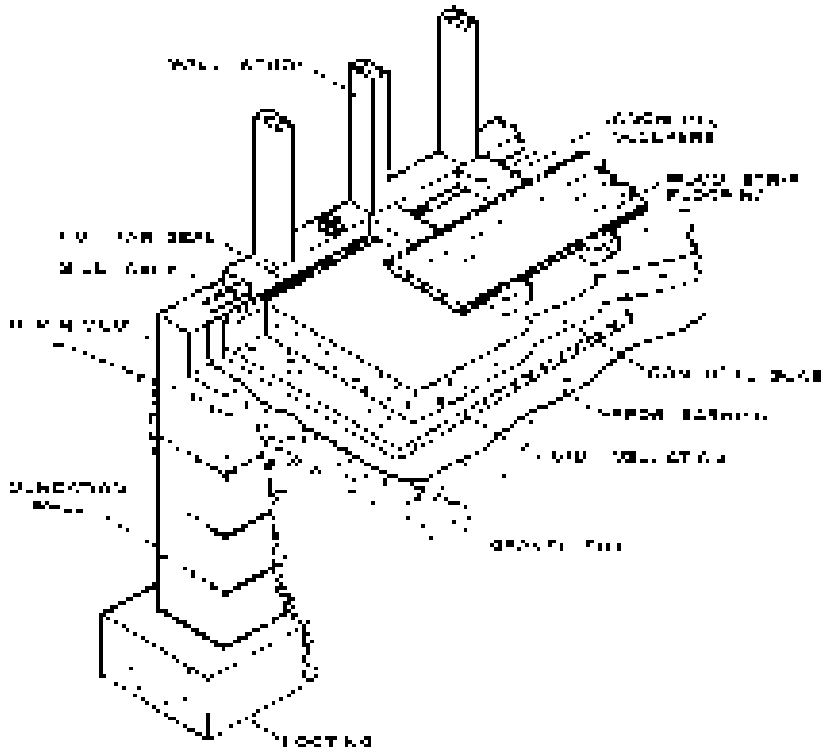

Figure 11–7 Slab on grade with foundation wall (U.S. Department of Agriculture)

[illegible] of wood, [illegible] or other material [illegible] the [illegible] in figure 11–7. Notice the use of [illegible] to prevent [illegible] moisture from [illegible] through the slab.

Framing Details

The [illegible] of supporting joists are [illegible] in Figures 11–8 and 11–9. A minimum bearing length of 1½ in. (38 mm) for joists should be provided where [illegible] a masonry wall. The bearing length should be increased to 3 in. (76 mm) [illegible] bearing [illegible] joists as shown in Figure 11–8.

The use of bridging [illegible] joists is [illegible] in Figure 11–9. Bridging [illegible] joists is [illegible] Table 11–2, Good Frame Systems [illegible]

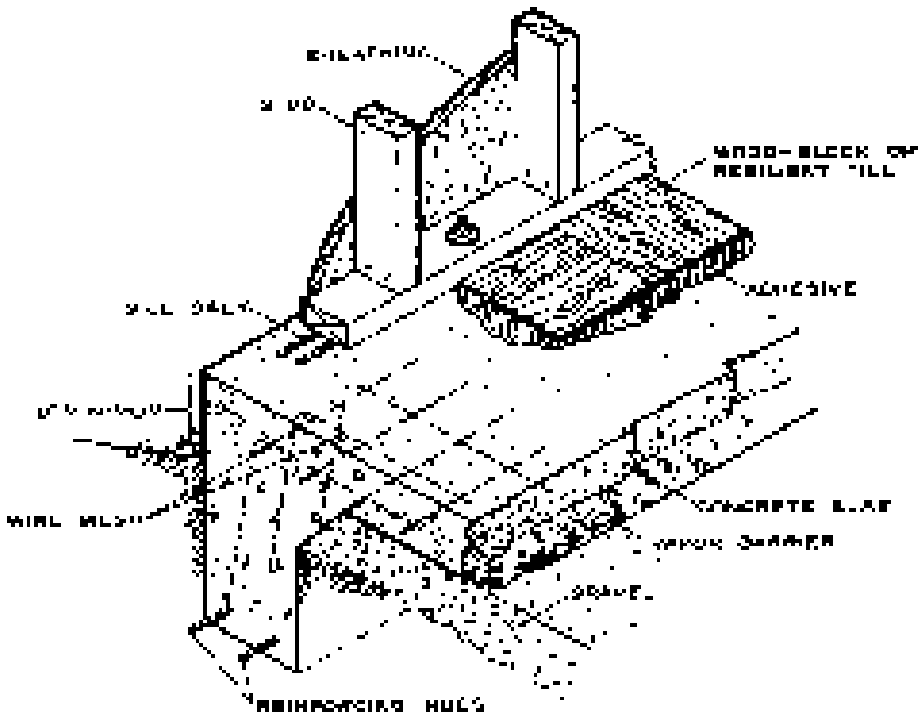

Figure 11–8 Combined slab-on-grade and crawl space foundation (U.S. Department of Agriculture)

Typical particulars for the construction of a crawl space foundation are shown in Figure 11–13. The foundation wall in the crawl space is usually a concrete stem wall supported by continuous footings at the sides of the crawl space. Most frost-protected crawl space foundations are built using concrete masonry units. The crawl space comes in two types: vented and unvented. Vented crawl spaces are more common and have been used for many years. Control joints are needed when the crawl space is unvented.

Roof Construction

Conventional roof construction, called "stick-built" framing, is illustrated in Figure 11–14. Rafters are notched so that they rest on a plate and are fastened in place by nailing them to the wall plate or to the top of metal framing anchors. The collar beam shown is used to resist the rafter spread and keep the roof rigid.

Roof trusses are now widely used in wood frame construction in place of stick framing. The use of roof trusses reduces lumber waste, allows for faster construction, and provides more space for insulation and utilities. Additional advantages of prefabricated roof trusses are that they are strong, lightweight, and economical; quality control is easier than with stick framing; and they are available in many sizes and shapes with design values for various lumber species, grades, and ERA Constructions. Construction of a typical roof truss is illustrated in Figure 11–15. Where

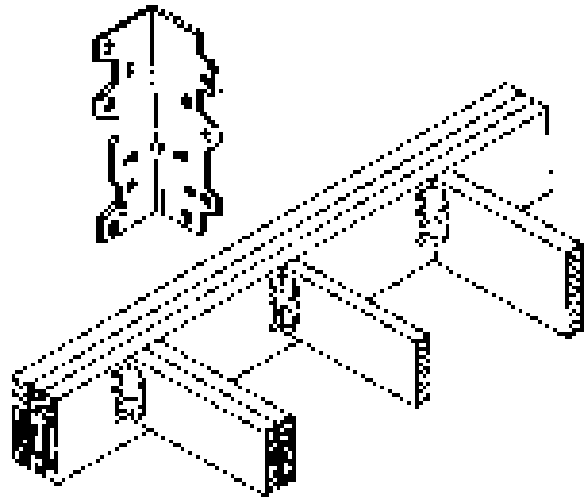

A. purpose hanger (section)

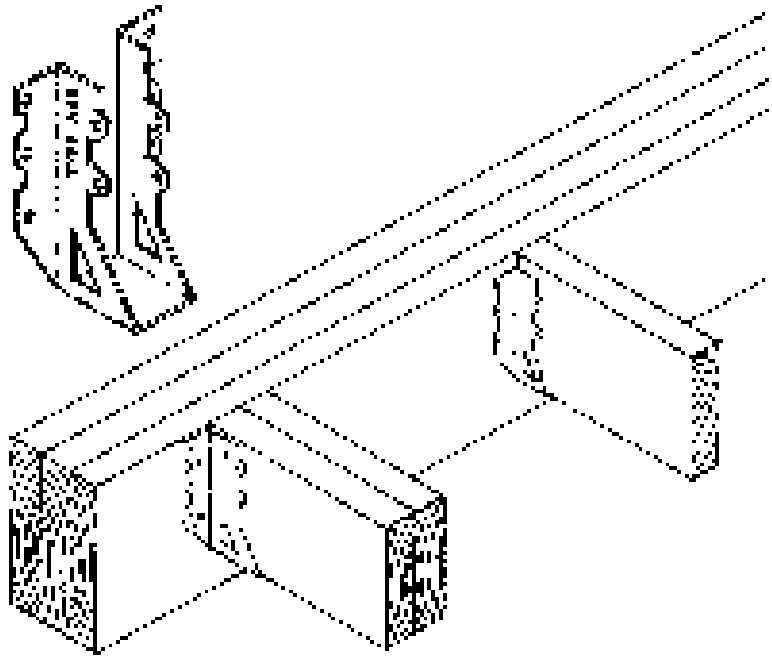

Joist hanger

Figure 11–9. Glass supported by joist hangers and framing angles. (Courtesy of TEOC, Washington, DC 20015)

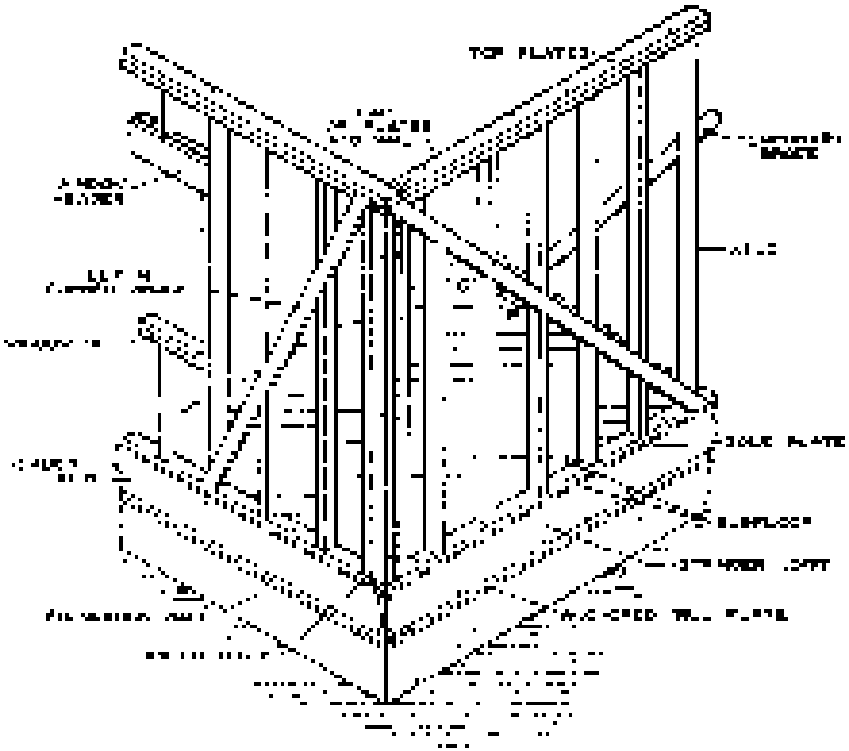

Figure 11-10 Exterior wall framing, platform construction. (U. S. Department of Agriculture)

[illegible]

Roof sheathing normally consists of 1-in. (25-mm) nominal boards applied perpendicular to the rafters or joists. Roofing is applied over the roof sheathing to provide a weathertight barrier.

Handling and Erecting Roof Trusses

Construction [illegible] damage to trusses while handling, storing, or erecting them. Trusses are particularly vulnerable to damage by improper lateral handling. Wide trusses may [illegible] members. Small trusses [illegible] be handled [illegible] lifting and [illegible] lift [illegible] material. Horizontally, trusses should be placed on flat surfaces placed at intervals of no more than 10 ft (3 m). Lumber [illegible] and [illegible] trusses from direct weather damage. Wide trusses are stored vertically, and handling should be [illegible] to prevent overturning, which could result in serious damage or injury to workers.

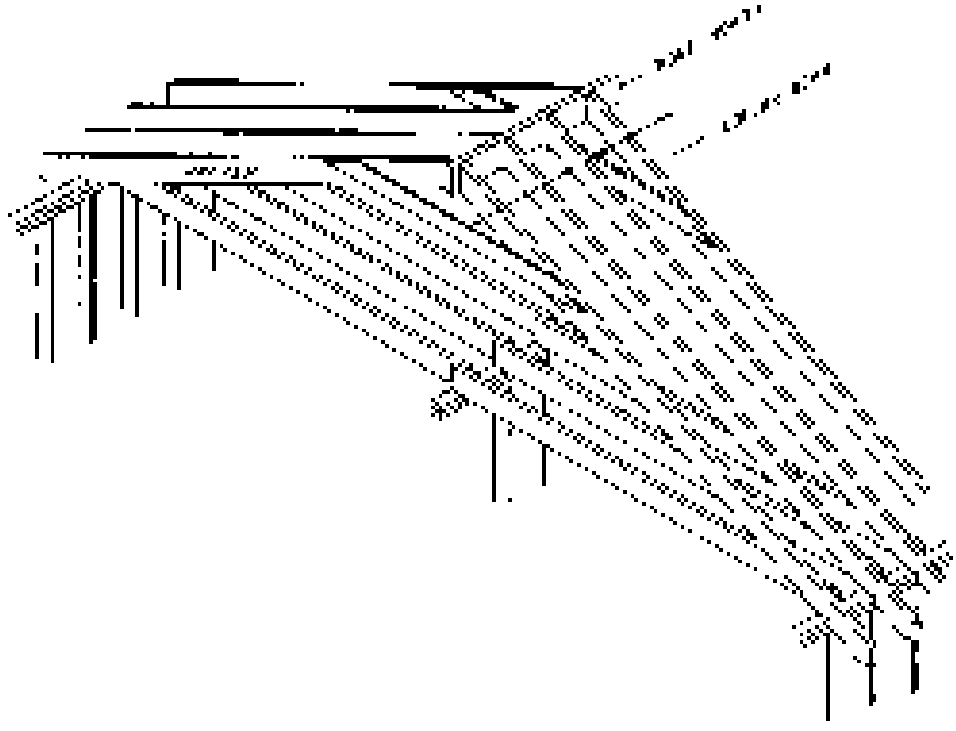

Figure 11-11 Roof framed with rafters and ceiling joists (courtesy of American Forest and Paper Association)

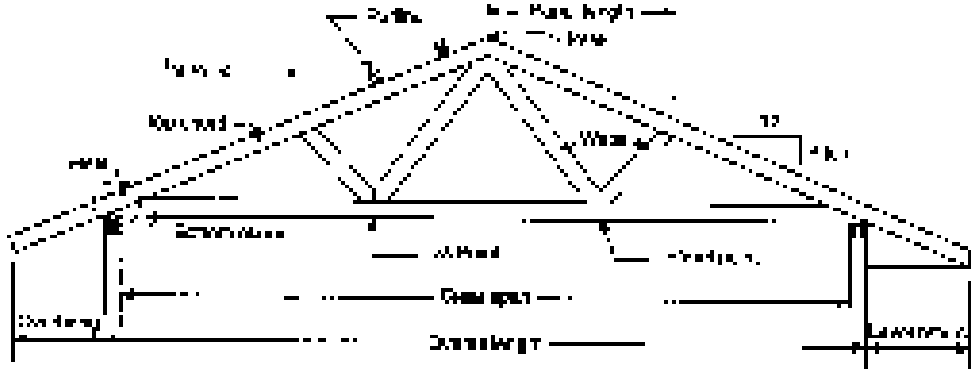

Figure 11-12 Truss components (courtesy of Alpine Engineered Products, Inc.)

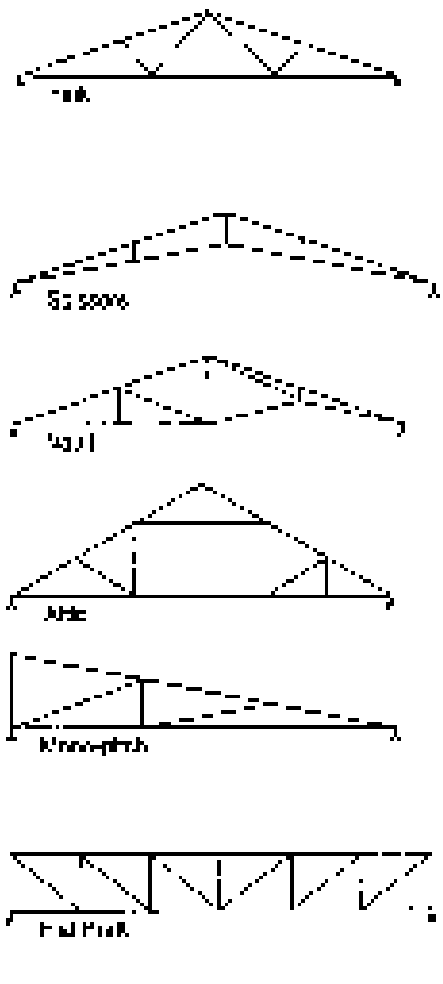

Figure 11-13 Common types of roof trusses (courtesy of Alpine Engineered Products, Inc.)

Short-span roof trusses (up to about 12 m) can usually be erected in place by hand. A common method involves temporarily supporting the truss on a scaffold while it is being pushed into place. The scaffold is then lowered and the truss is left in place. The erection of larger roof trusses can be accomplished by two methods. The truss can be lifted from the ground to the top of the walls, and then the truss can be slid into place. Longer trusses can be built into place using a crane or other lifting device with the appropriate lifting capacity and proper rigging. Suggested procedures for lifting a truss with a crane are illustrated in Figure 11-14. Some of the pro-

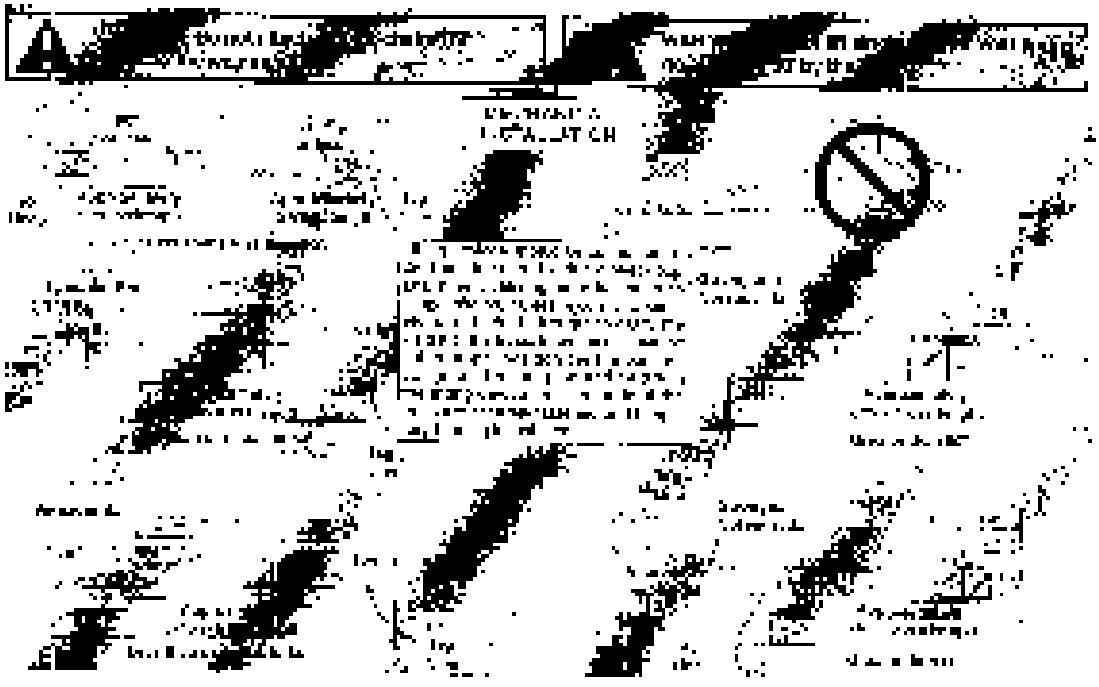

Figure 11–84 [illegible] (Reproduced from [illegible], courtesy of Truss Plate Institute, Inc.)

[illegible] illustrated in Figure [illegible] [illegible] [illegible]

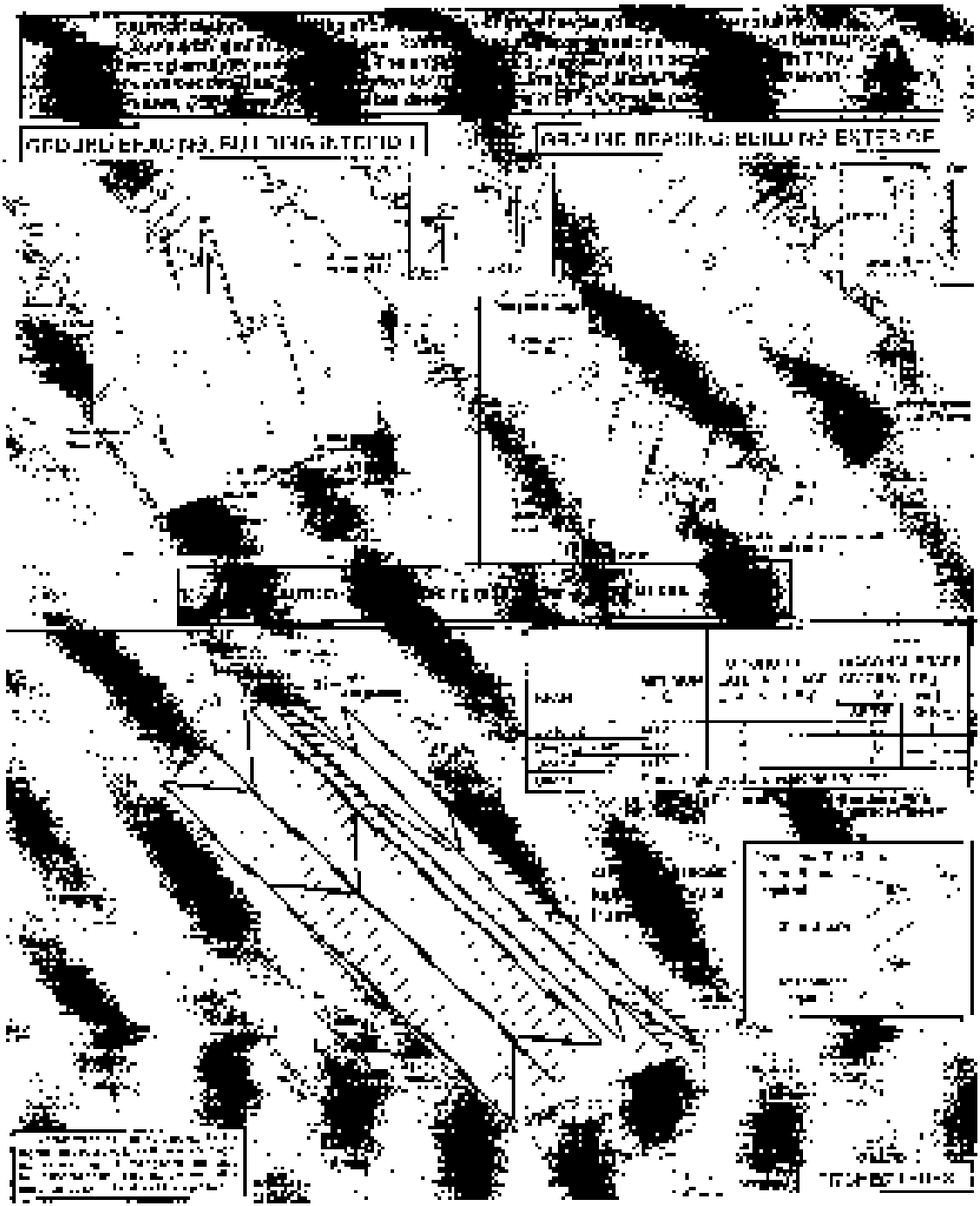

Figure [illegible] [illegible] (Reproduced from [illegible], [illegible] of [illegible] [illegible])

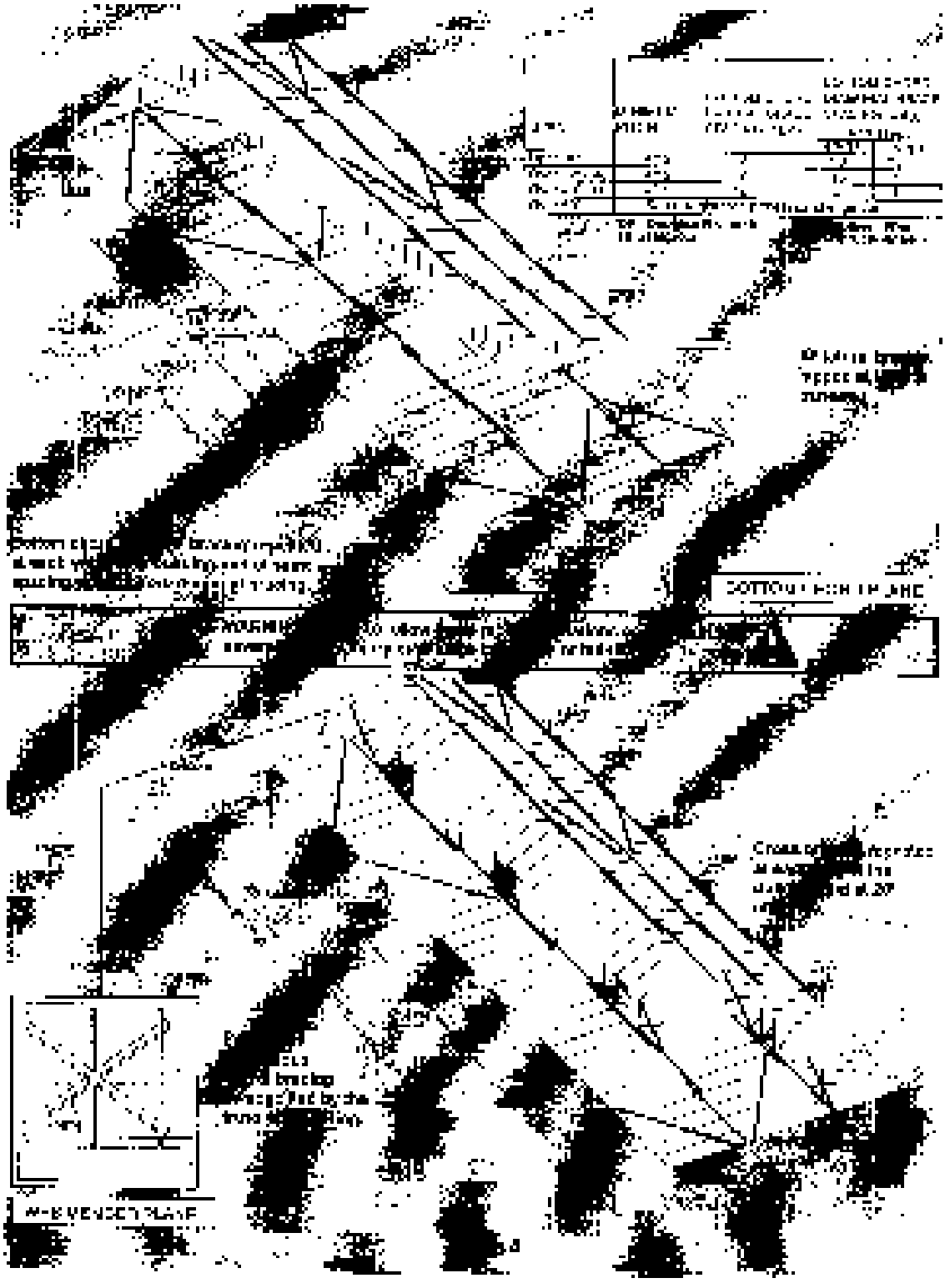

Figure 81-13 (Continued)

BE SURE TO RETAIN COPY OF TRUSS DESIGN DRAWINGS FOR READY REFERENCE

		OK	REJECT
A	JOBSITE STORAGE (if applicable)		
	1 [illegible]	☐	☐
	2 [illegible]	☐	☐
	3 [illegible]	☐	☐
B	HANDLING & ERECTION		
	1 [illegible]	☐	☐
	2 [illegible]	☐	☐
	3 [illegible]	☐	☐
	4 [illegible]	☐	☐
C.	CONFIGURATION		
	[illegible]	☐	☐
	[illegible]	☐	☐
	[illegible]	☐	☐
	[illegible]	☐	☐
	[illegible]	☐	☐
	[illegible]	☐	☐
D	SOURCE		
	[illegible]	☐	☐
	[illegible]	☐	☐

		GRADE OK	GRADE REJECT	AGE OK	AGE REJECT
E	LUMBER SIZES & GRADES				
	1 [illegible]	☐	☐	☐	☐
	2 [illegible]	☐	☐	☐	☐
	3 [illegible]	☐	☐	☐	☐
	4 [illegible]	☐	☐	☐	☐

		OK	REJECT
F.	TRUSS CONNECTORS		
	[illegible]	☐	☐
	2 [illegible]	☐	☐
	3 [illegible]	☐	☐
	4 [illegible]	☐	☐
G	INSTALLATION		
	1 [illegible]	☐	☐
	2 [illegible]	☐	☐
	3 [illegible]	☐	☐
	4 [illegible]	☐	☐
	5 [illegible]	☐	☐
	6 [illegible]	☐	☐
	7 [illegible]	☐	☐
	8 [illegible]	☐	☐
	9 [illegible]	☐	☐
	10 [illegible]	☐	☐
H	MISHANDLING & ALTERATION		
	1 [illegible]	☐	☐
	2 [illegible]	☐	☐
	3 [illegible]	☐	☐
	4 [illegible]	☐	☐

[illegible]

Figure 11-36 [illegible] for Truss Installation. [illegible] of Alpine Engineered Products, Inc.

Common Installation Errors

1. Cut truss members improperly [illegible]
2. Fail to install truss members in [illegible] place.
3. Truss [illegible] improperly [illegible] with [illegible] hardware.
4. Leave connection [illegible] [illegible] on place [illegible]
5. Install trusses out of [illegible] sequence.
6. Fail to install [illegible] properly [illegible] (These properties are [illegible] specified in the truss design drawings.)
7. Cut or [illegible] plywood [illegible]
8. Cut truss members improperly [illegible] (These [illegible] are specified in the truss design drawings.)
9. Trusses installed in the wrong location.
10. Cut or [illegible] truss members improperly [illegible] or [illegible] moisture [illegible]
11. Install [illegible] [illegible] improperly [illegible]
12. Connection [illegible] [illegible] of the [illegible] specified or [illegible] [illegible] designed in engineering. This [illegible] [illegible] [illegible] design [illegible] specific [illegible]
13. Truss [illegible] [illegible] the design specifications.
14. Use [illegible] standard [illegible] [illegible] [illegible]

[illegible] properly located. Any damaged wall should be inspected by an engineer to determine repair needed. Diagonal measurements should be taken along the line where [illegible] to determine if the wall is square. Web and cover members should not be drilled or cut without approval of the wall designer/engineer. These members should be checked for [illegible].

Siding

Exterior frame walls are most commonly covered with wood or plywood siding, or masonry veneer applied over sheathing. Siding may consist of horizontal lap, panel, or shingle placed diagonally, plywood or hardboard panels, or shingles. Sheathing may be omitted when plywood siding is applied. It should be noted the recommendations of APA—The Engineered Wood Association, which have stimulated a national [illegible] wall construction. To make a lightweight, inexpensive, [illegible] the siding of stage wall construction must be caulked, lapped, battened, or [illegible] with building paper.

Brick veneer siding over plywood sheathing is shown in Figure 11–18. Note the building paper is not required over plywood sheathing when [illegible] weep holes are provided. However, sheathing paper should be used over wood sheathing. A [illegible] water will need over plywood sheathing, which is [illegible] in Figure 11–18.

Typical types of wood siding are shown in Figure 11–37. Note the siding methods used. Typical siding installations are shown in Figure 11–21.

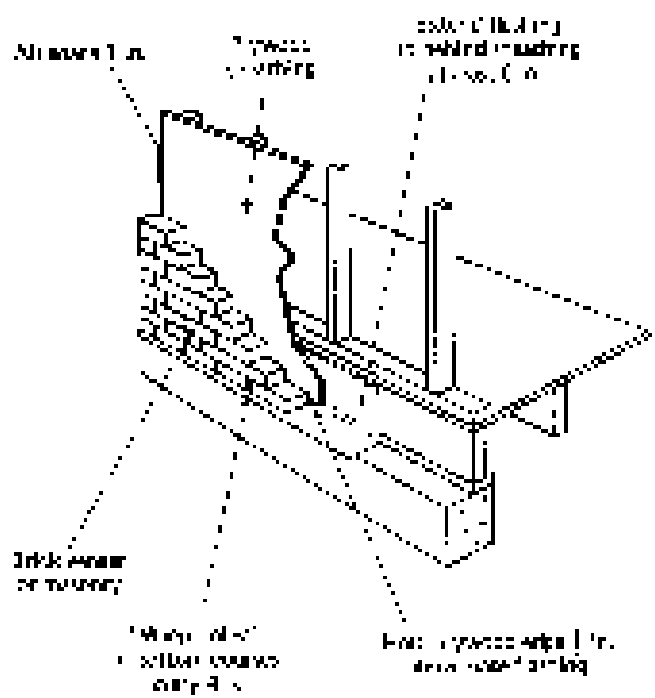

Figure 11–18 Brick veneer wall. (Courtesy of APA—The Engineered Wood Association)

Figure 11–19 Structural wood sheathing. (Courtesy of APA—The Engineered Wood Association)

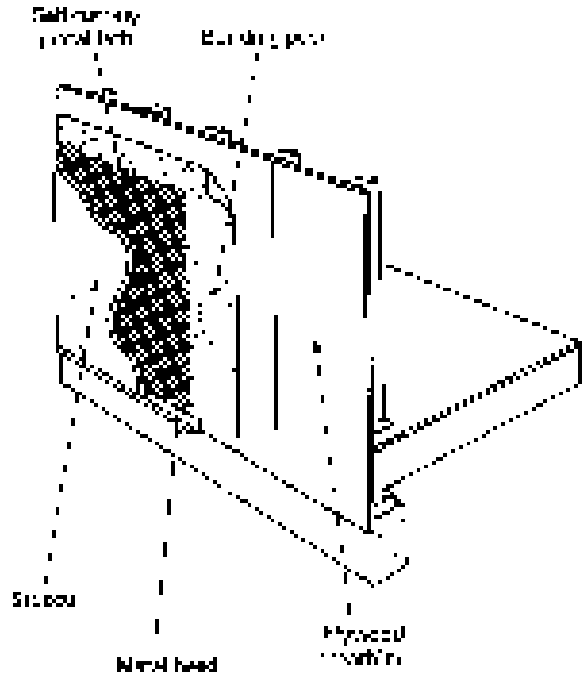

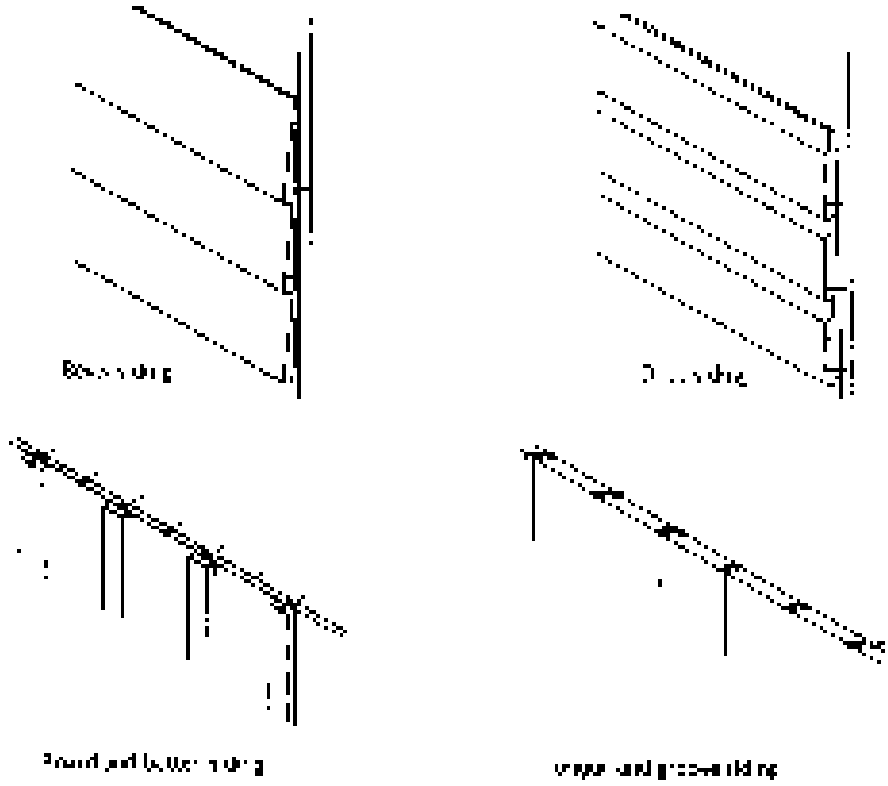

Figure 11–20 Common types of wood siding. (Courtesy of American Forest and Paper Association)

Figure 11-21 Plywood curtain wall sheathing (Courtesy of APA—The Engineered Wood Association)

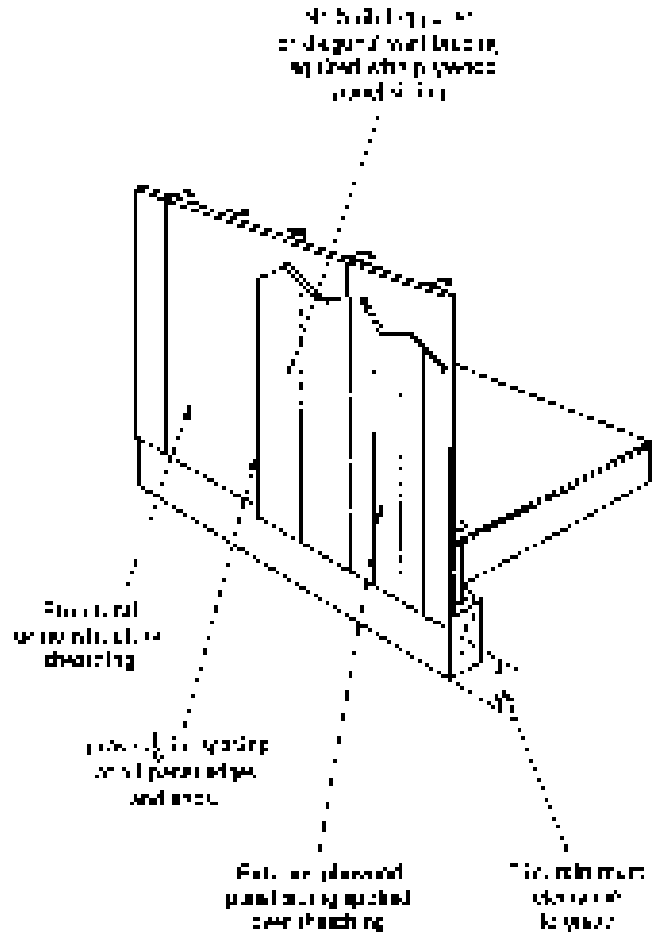

Plank-and-Beam Construction

Plank-and-beam construction is post and beam construction adapted to framing with decking and roof sheathing. Usually, in mid-20th-century practice, the post and beam spacing ranged from 8 to 12 feet, and the decking was typically a 2-inch-thick tongue-and-groove plank. Beam and post framing is covered with decking and finished as in Figure 11-21. In post-and-beam construction, stepped-in roofing (not shown) is provided in exterior walls to compensate for the roof edges.

Several advantages are found in this method of framing. The principal one being the opportunity to employ the smaller mechanical equipment available. The system also increases the relative architectural effect of the many posts in relation to the beams. Some construction details have been described in Figure 11-23.

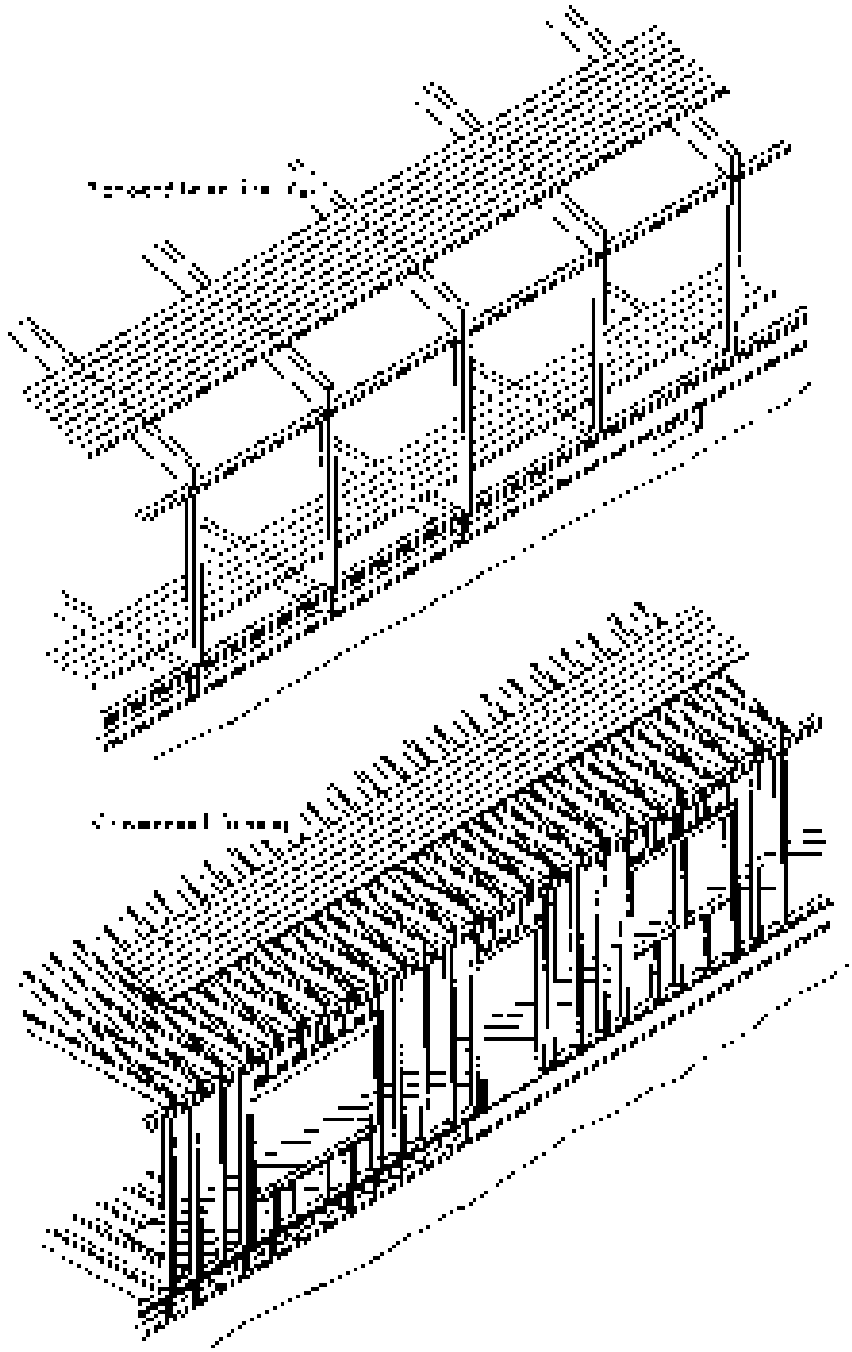

Figure 11-22 Comparison of [illegible] and conventional framing (Courtesy of American [illegible] and Paper Association)

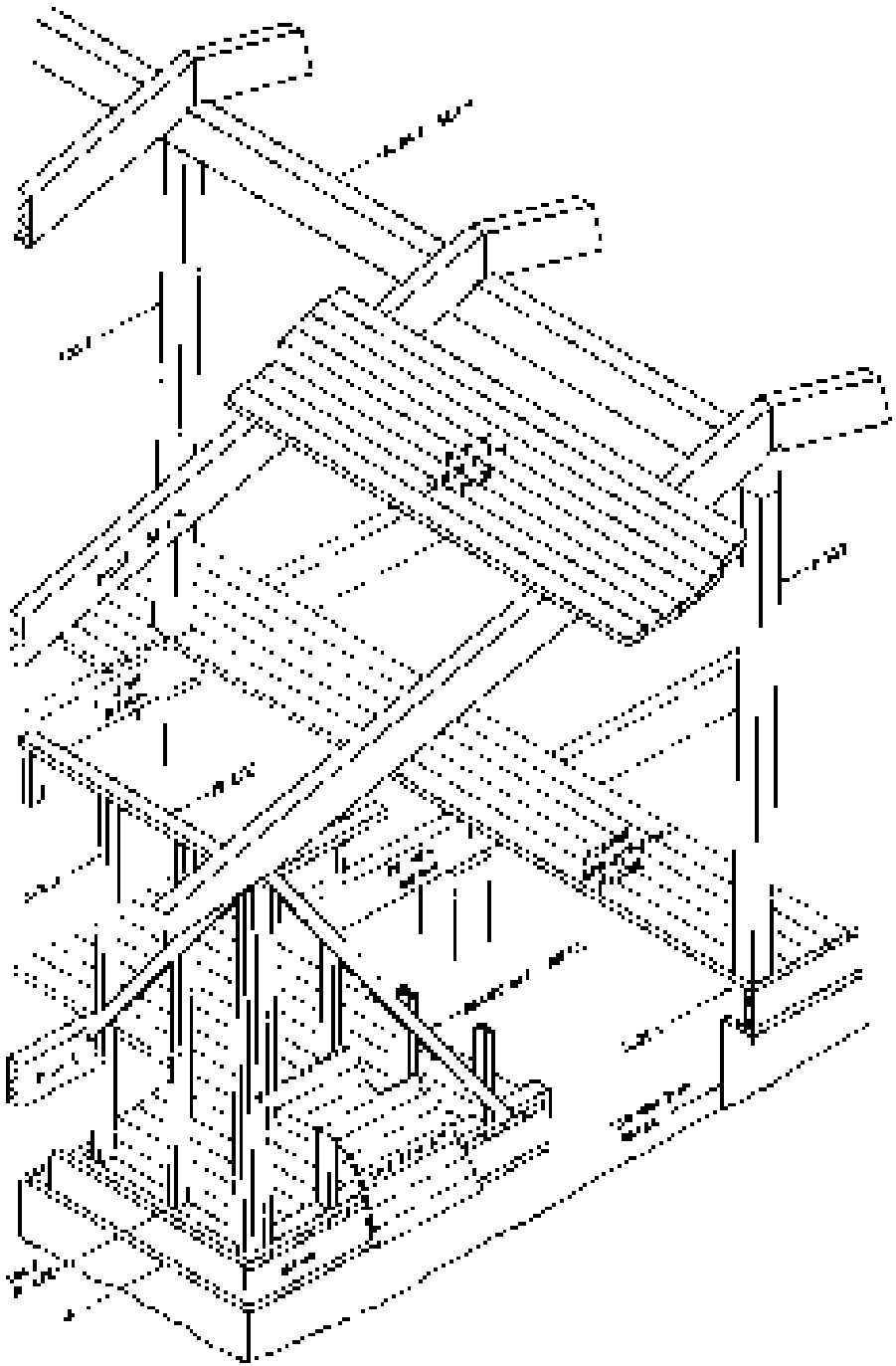

Figure 11-23 Stick-and-beam framing for [illegible] (Courtesy of American Forest and Paper Association.)

11–4 TIMBER CONSTRUCTION

Buildings

The term heavy timber construction originally like light and heavy structure meant standard machine finished timbers were normally compared to the light sizes. Today heavy timber construction indicates the type of wood building construction that carries the highest fire resistance classification. Such high fire resistance is achieved by specifying minimum sizes of the members of wood structural members, the components and minimum thickness of floors and roofs, the types of fasteners and adhesives used, and the finishes and coatings used as by protecting concealed spaces under floors and roofs.

Both glued laminated and sawn timber are used in modern heavy timber structures. Most are commonly one story in height. Such construction is widely used for schools, churches, public buildings, gymnasiums and barns, as well as for industrial and commercial buildings.

A typical multistory building of heavily timber construction is illustrated in Figure 11–35. Its foundation and floor are constructed by the National Forest Products Association formula and column sizes are shown in Figure 11–36. Such details are typical of the practice for an economical, fire resistant multistory timber construction. Some typical connections of glued laminated timber members are illustrated in Figures 11–36 to 11–38. Figure 11–37 shows a typical roof structure using glued laminated timber. Also shown are the perpendicular gravity loads, including roof live loads, of timber trusses supported by column posts. A similar situation is shown in Figure 11–37. A modern roof structure of heavy timber is used in the building of Figure 11–38. The type of truss shown in Figure 11–39 may be utilized in an employment by alternating roof and floor the building's construction, to take great advantage of the spatial scale.

Bridges

Timber bridges have been used throughout our national history in spanning streams and valleys. Major types of timber bridges include massive beam bridges, truss bridges, and arch bridges. Trestle bridges consist of stringers which are supported by timber or pile bents so that the roadway is at the top of the structure. Figure 11–39. Bents are constructed to the stringers, the stringers. Note the use of heavy bracing for overall stability, as shown in Figure 11–40. Timber bents consisting of several vertical members connected to horizontal and longitudinal members, are also used. Stringers are usually of sawn or glued laminated timber, or other timber members. Girder bridges, and arch bridges are suitable for spans of greater distances than are trestle bridges. Wood girders are usually fabricated from horizontal members. The construction of truss bridges is similar in design to those used for roof trusses. Truss designs employed include pratt, howe, warren, and modified howe trusses, and the howe-pratt trusses.

Arches and domes. Timber arches are made from sawn members or from glued laminated timber. Arches are usually fabricated of glued laminated timber. A challenge in arches using glued laminated timber

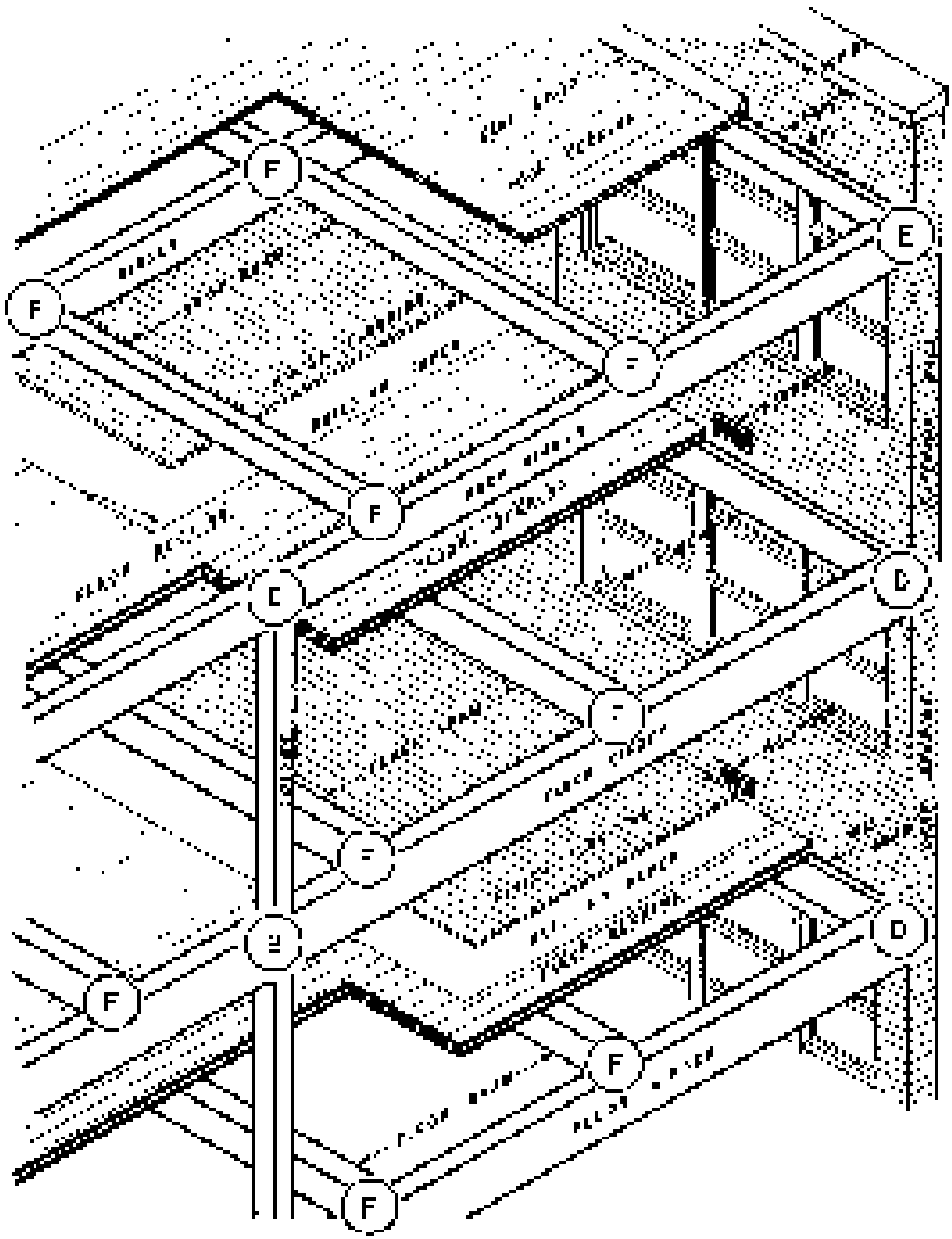

Figure 11-24 Traditional heavy timber construction (Courtesy of American Forest and Paper Association)

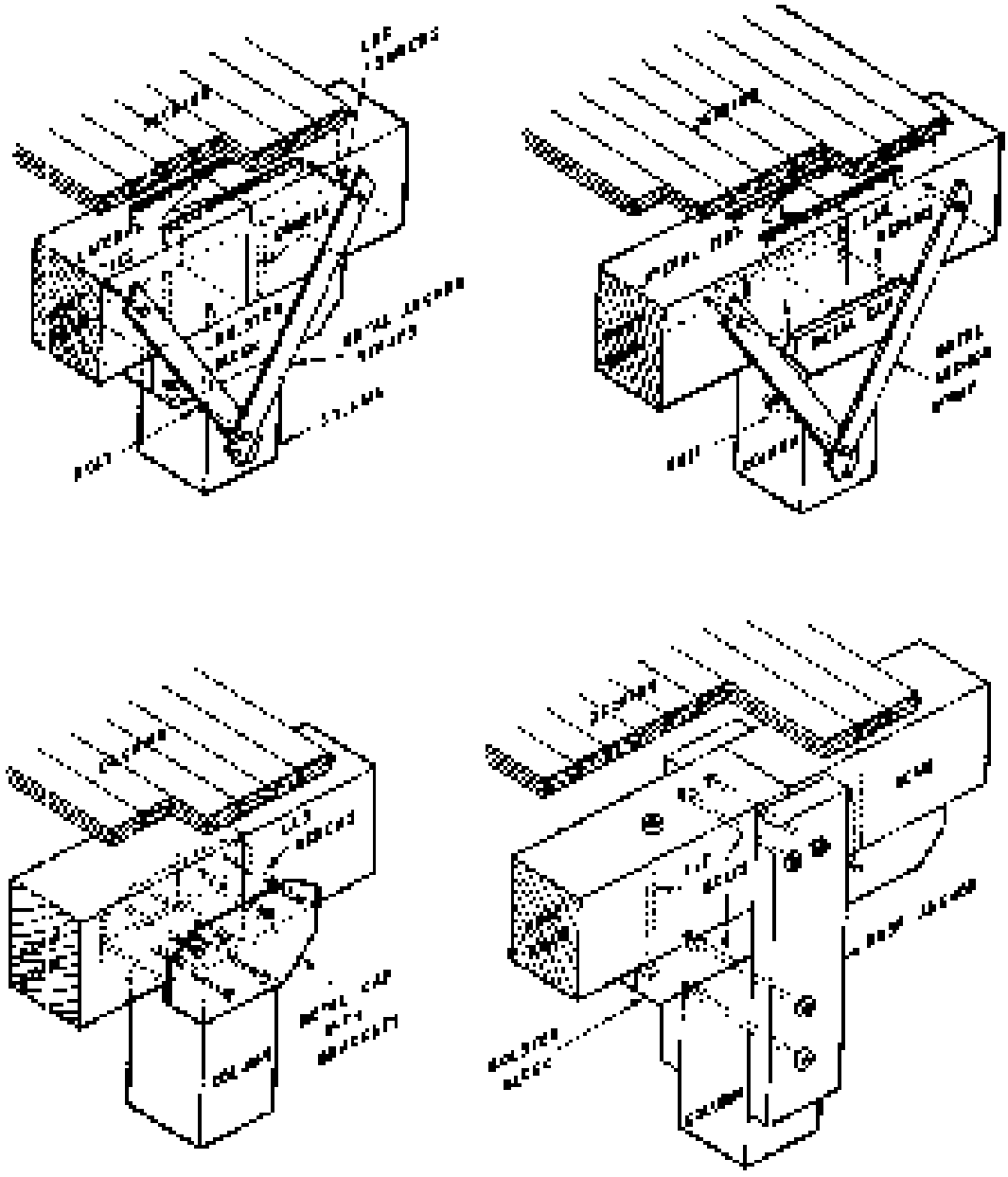

Figure 11.25 [illegible] beam and column connection details [illegible] courtesy of American Forest and Paper Association [illegible]

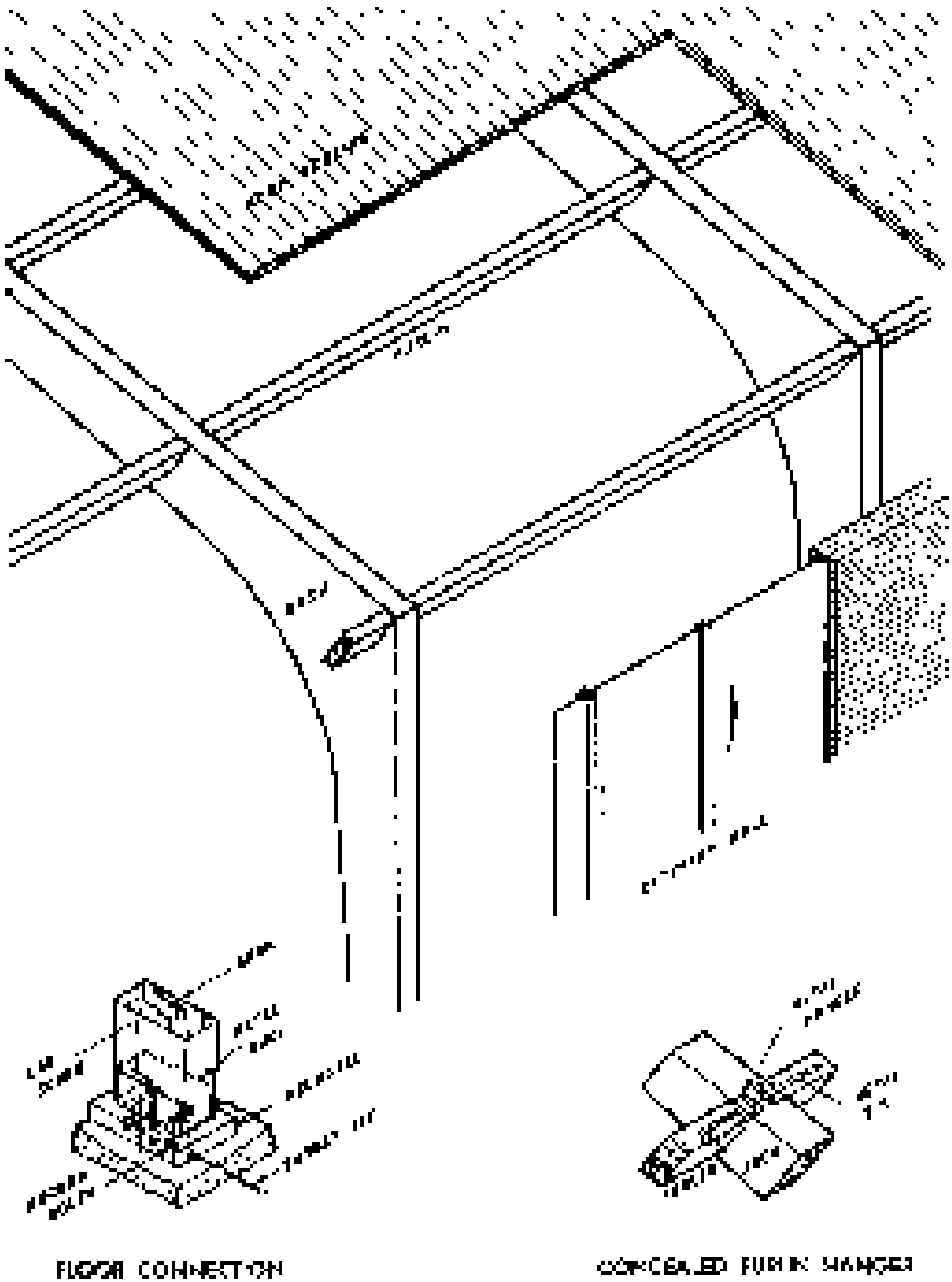

Figure 11-26 Rigid arch frame supported at floor (Courtesy of American Institute of Steel Construction)

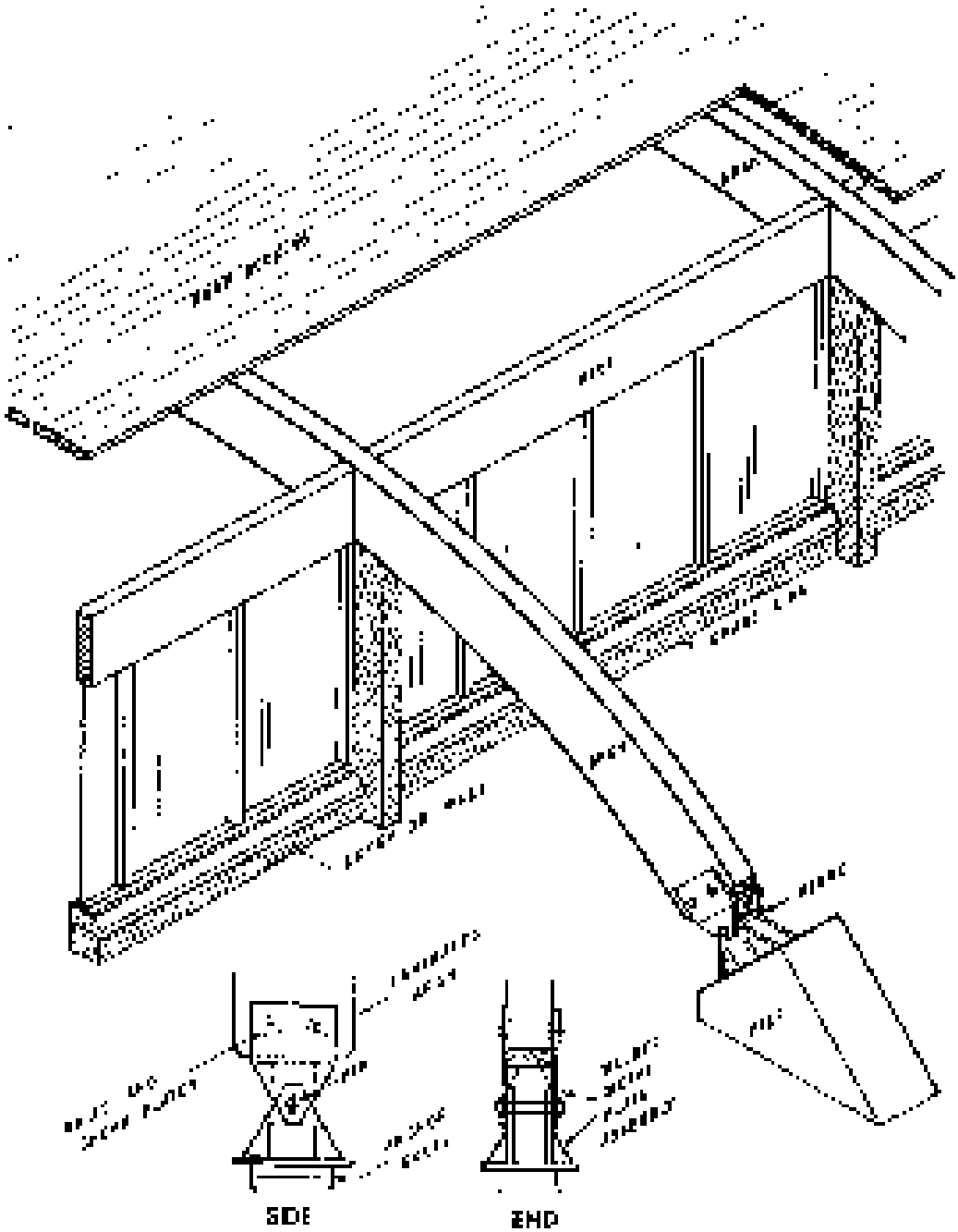

Figure 11-27. Barge arch frame supported by hinge joint (Courtesy of Gunite Contractors and Paper Association)

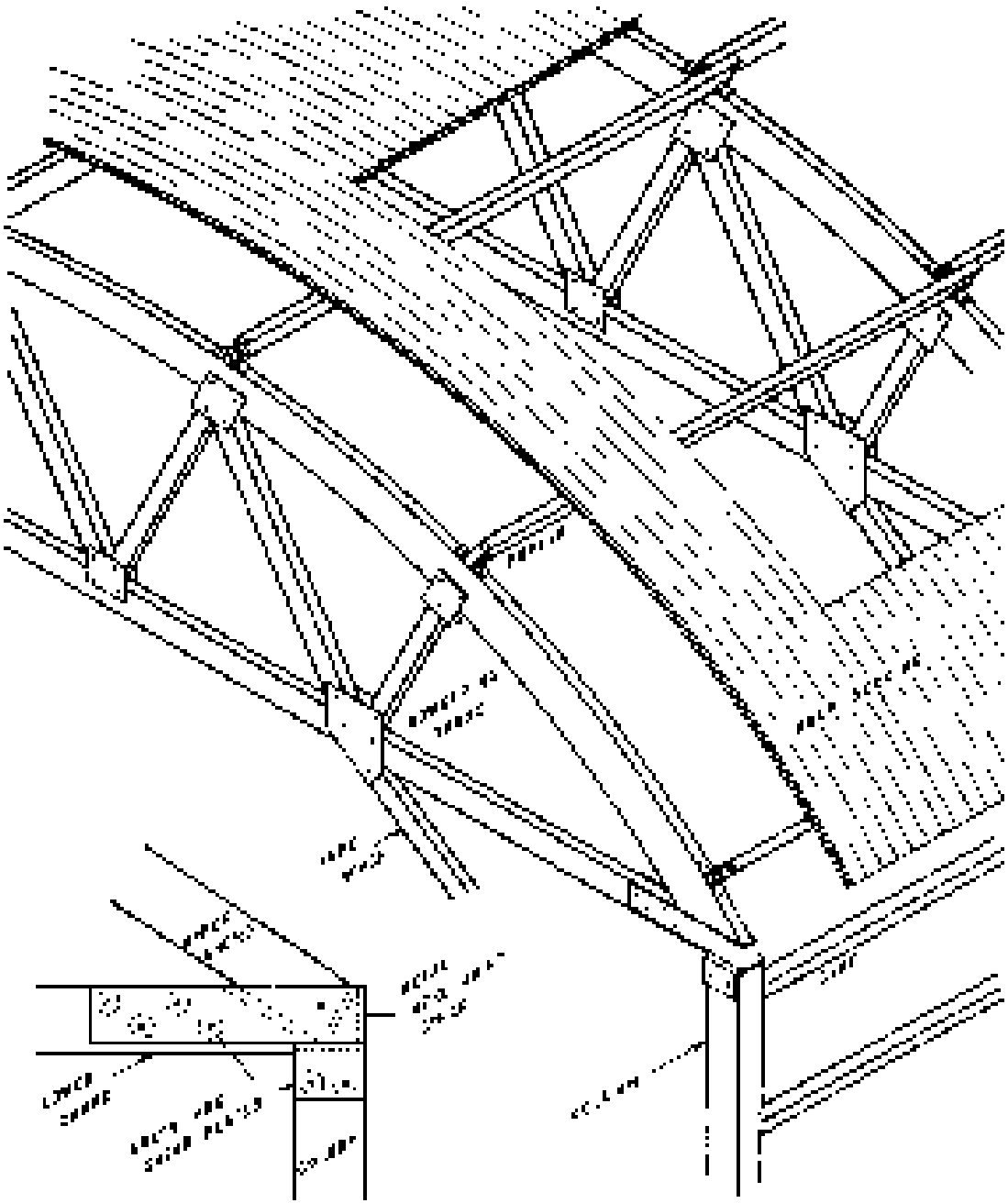

Figure 11-28 Timber roof truss supported by wood column (Courtesy of American Forest and Paper Association)

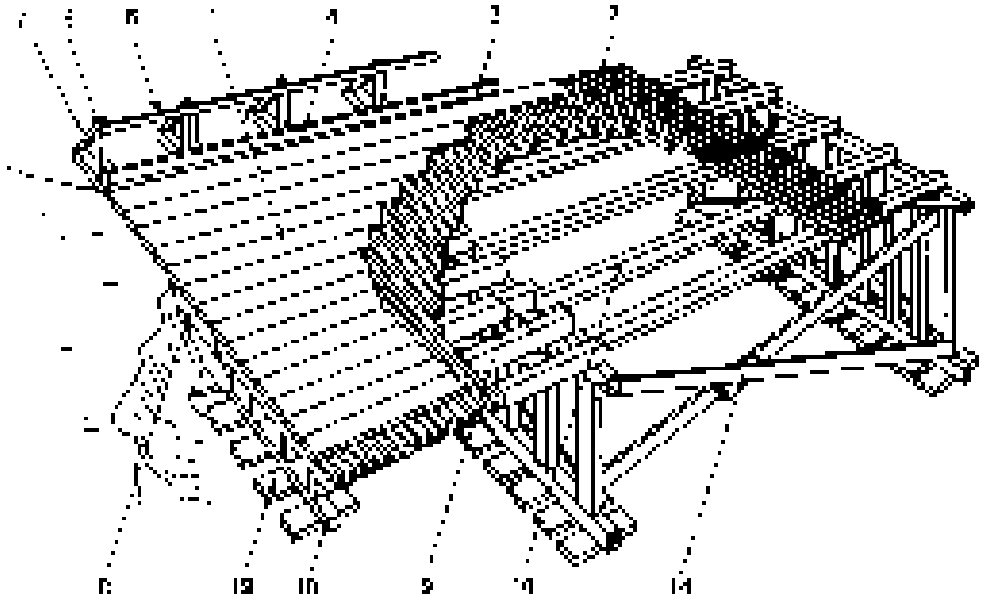

1 – Deck
7 – Chord
8 – Deck
9 – Diagonal brace
5 – Panel
6 – Panel post
7 – Lower chord
8 – Lattice
8 – Transverse girder
10 – Floor stringer
14 – Longitudinal bracing
13 – Abutment wall
[illegible]

Figure 11-29 [illegible] bridge with frame [illegible] Department of the Army

[illegible] continuous longitudinal stringers [illegible] 32 ft long.

Other Structures

[illegible] towers, [illegible] towers, and power [illegible] transmission [illegible] properties.

11-5 FASTENINGS, CONNECTIONS, AND NOTCHING

Fastenings

[illegible] connections between members [illegible] and [illegible] preservation [illegible]

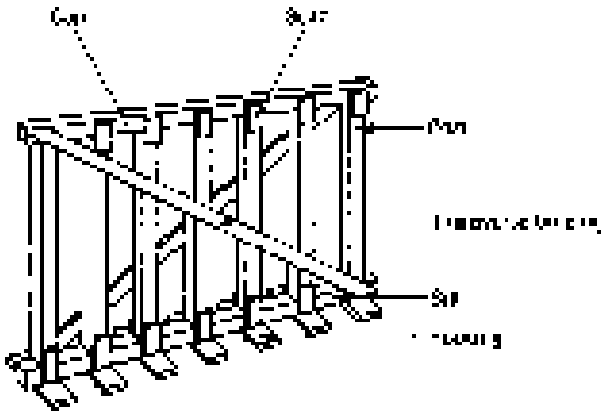

Timber Lock Box

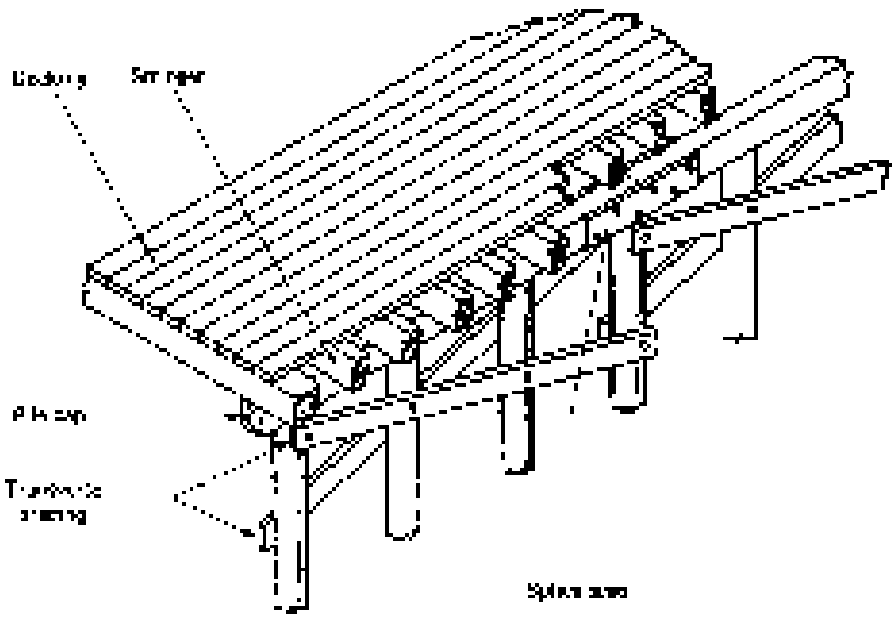

Figure 11-30 Typical timber mooring and fender facility.

major types of fasteners include bolts, lag screws, spikes, dowels, and drift bolts for daily piers. Major factors affecting the allowable design of mechanical fasteners include the species, the size of the wood, the angle of the load with respect to the wood grain, the use of the member, the purpose of the fastener, the location of the fastener from the edge of the wood, and the spacing of fasteners. Methods for determining the allowable loads for various types of fasteners are given in References 2 and 3.

Figure 11-31 Highway bridges supported by glued laminated timber beams. (Courtesy of American Institute of Timber Construction)

Table 11-1 Common wire nail sizes

Size: Penny (d)	Wire Gauge	Length in.	Length cm
2	12½	1.00	2.5
3	12½	1.25	3.1
4	12½	1.50	3.8
10	9	3.00	7.6
12	9	3.25	8.3
16	8	3.50	8.9
20	6	4.00	10.2
30	5	4.50	11.4
40	4	5.00	12.7
50	3	5.50	14.0
60	2	6.00	15.2

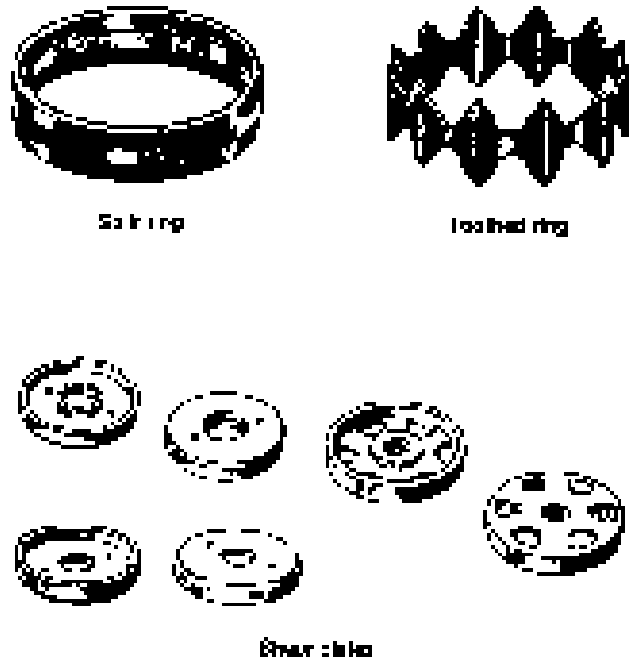

Figure 11-32 Typical timber connectors (courtesy of American Forest and Paper Association)

Connectors

To provide the most efficient use of materials and labor while providing the required strength, a number of types of connectors have been developed. Major types of timber connectors include split ring connectors, toothed ring connectors, and shear plates. These are shown in Figure 11-32. These connectors must be fitted to the joint in wood members and then some connector under compression. Split ring connectors and shear plates fit into grooves cut into the surfaces of the members. Toothed ring connectors are forced into the wood under the pressure of a special pressing tool.

Light metal stamped devices are available in a wide range of types and sizes, some of which are illustrated in Figure 11-33. Typical metal connector plates are composed of teeth or may use nails for fastening. All plates require pressing such as may be used for a variety of connections such as truss joints, plates and bolts to wood and bolts alone.

Notching and Boring of Beams

Notching the top or bottom of a beam will seriously reduce its bending strength. In short, heavily loaded beams, it is advisable to avoid notches altogether. The size vertical coordinate of a notched beam can be calculated, which is provided on the notch side, as shown in Figure 11-34 using the formula as follows:

$$v = \frac{2F_v A_n^2}{b'} \qquad (11\text{-}4)$$

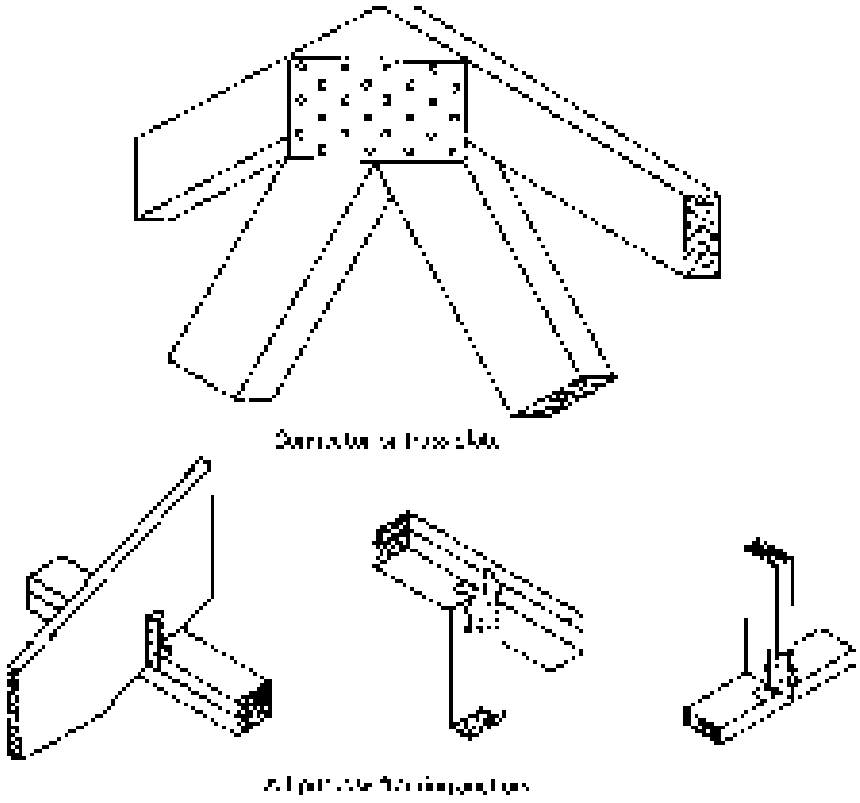

Figure 11–33 Approved light-metal framing devices. (Courtesy of TECO Westbrook, Inc. DF 20015)

Figure 11–34 End notching of beam

where R = end vertical shear reaction (lb)
F_v = allowable shear stress (psi)
b = width of beam (in.)
d = depth of beam (in.)
d_n = depth of beam at notch (in.)

When the notch is on the tension side, the reduced section relative to shear should be considered. Equation (11–2) may be used instead of Equation (11–1) to calculate the maximum allowable end notch for the beam.

$$R = \frac{Fb(d - d_n)}{2} \qquad (11-2)$$

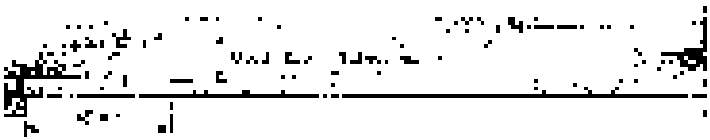

Figure 11-35 Cutting operations in wood-frame. (Courtesy of Acme Engineering Products, Inc.)

When it is necessary to attach jambs to the rough opening, provide passageways for piping or electrical cables, the following items should not be connected to the rough opening or the jamb. Nailers in the rough opening should not exceed one third of the jamb thickness. Internal trim members of the jamb, rough frame, or sill should be installed in holes based on size should not exceed one third of the jamb thickness. Jamb nailers and internal trim members should be fastened to the jamb.

Some suggested guidelines for rough openings in wood buildings are presented in Figure 11-35.

PROBLEMS

1. Automatic 2 × 10 in. (50 × 250 mm) floor joists are used in a building with a span of 9 in. (2.7 m). The joists are located at 16 in. (400 mm) o.c. If the joists are to be spaced at 12 in. (300 mm) o.c., what is the maximum allowable span?
2. How does a wood-type plywood differ from a plywood type sheathing?
3. What precautions should be taken in storing and handling wood materials?
4. What purpose does a vapor barrier serve and how is it installed?
5. Explain the major safety hazards involved in storing the materials for a typical frame building.
6. What is FRTW and FRTW and what purpose does it have in environmental control?
7. Explain the conditions when should be observed when locating holes in joists for the passage of pipes or electrical conduit.
8. Briefly discuss the following wood products and their uses:
   a. Laminated veneer lumber.
   b. Wood fiber.
   c. Particleboard.
9. Which is a brief explanation of the construction of a typical wood stud.
10. Develop a computer program to calculate the sale vertical and horizontal loads on a structural beam (Problems 11-1 and 11-2). The program input should include the possible choices of types of loads and the distance over which the load is located. Using your program, solve Problem 1.

REFERENCES

1. National Institute of Building Sciences, Inc., Design Criteria for Wood Stud Construction, Washington, D.C., 1978.
2. Anderson, L. O., Wood-frame House Construction, Agriculture Handbook No. 210, U.S. Department of Agriculture, Washington, D.C., 1970.

4. [illegible] Tacoma, WA.
5. [illegible] Washington, DC [illegible].
6. [illegible] Washington, DC [illegible].
7. [illegible] Washington, DC [illegible].
8. [illegible] Washington, DC [illegible].
9. [illegible] Washington, DC [illegible].
10. [illegible] Washington, DC [illegible].
11. [illegible] Washington, DC [illegible].
12. [illegible] Washington, DC [illegible].

12

Concrete Construction

12-1 CONSTRUCTION APPLICATIONS OF CONCRETE

Concrete is the primary material for construction across the world's most extensive and widely used construction materials. It is used in the design of highways and airfields described in Chapter 8. Other construction applications which usage should be made in foundations for small structures, through surround components such as concrete walls, to massive structures such as dams and in bridges.

The principal reinforcing material is steel as described in Chapter 3. Because concrete is brittle and weak in tension, it is only used concentrated for structural purposes such as in reinforcing members embedded in the concrete to increase the tension member's tensile strength. Such concrete is called reinforced concrete, while the steel reinforcing bars are described in Section 12-3 is most commonly used material. Timber is used where concrete materials are not available.

A typical distribution of concrete construction costs for a multistorey building is shown in Figure 12-1. The objective of the construction manager would be to develop a construction plan which minimizes construction costs while meeting all safety and quality requirements. Major elements of a construction cost analysis include

- Formwork costs including shoring, falsework, and materials
- Cost of transporting steel and its placement
- Concrete costs including pumping, placing, curing, and finishing concrete

Since formwork costs may account for more than 50% of the total cost of concrete construction, considerable effort must be made to reduce formwork costs using the methods explained in Section 12-3.

Cast In-Place Concrete

Concrete structures in general have traditionally been built in-place by pouring the concrete into forms and around reinforcing bars. The forms are removed after the concrete has developed sufficient strength to support its own weight and the weight of any construction loads. Typical depressing people concrete material conditions are described in the following paragraphs. The construction and use of concrete forms are recorded in Section 12-3.

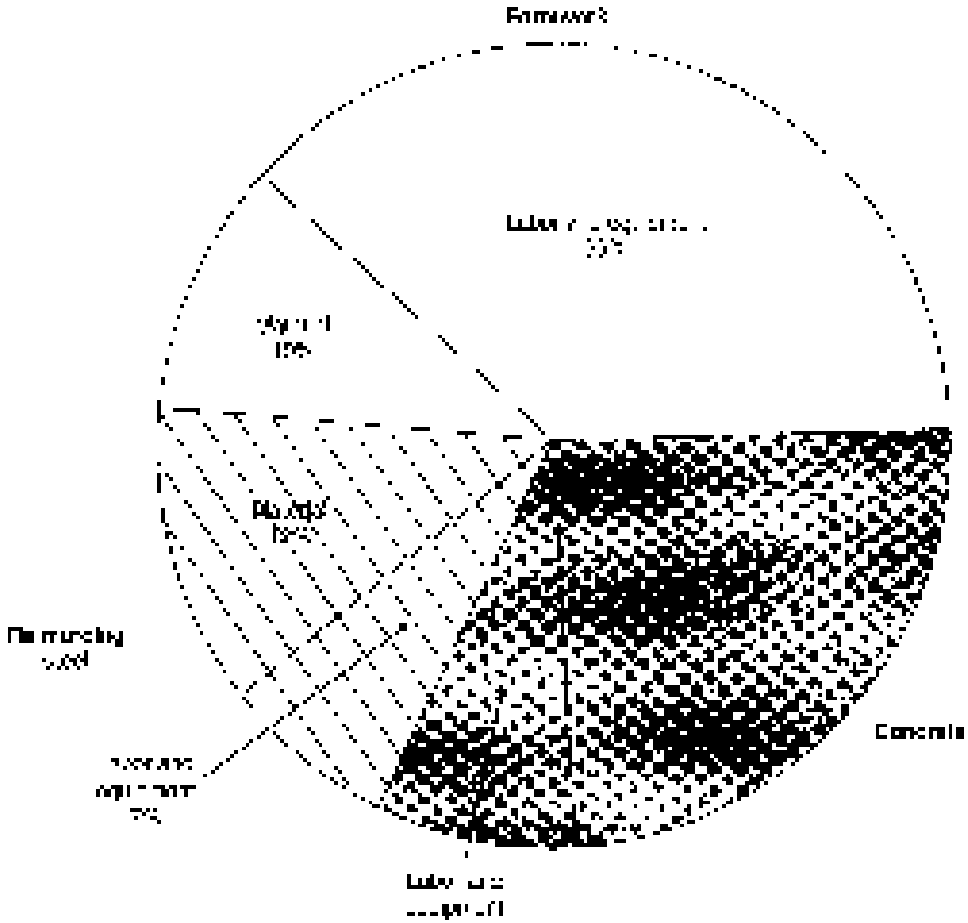

Figure 12.1 Typical distribution of concrete construction costs.

Walls and Wall Footings

Although most any type of concrete wall may be cast in place, this method of construction is now used primarily for foundation walls, retaining walls, tank walls, and walls for special-purpose structures such as nuclear reactor containment structures. High rise [illegible] and form work with [illegible] wall panels [illegible] these [illegible] walls. Concrete in normal pour [illegible] illustrated in Figure 12-2. In placing concrete and wet [illegible] must be taken to avoid segregation of aggregate and paste that may occur when concrete falls [illegible] distance. Another problem [illegible] wall construction is the formation of voids spaces in the concrete under horizontal [illegible] pipe [illegible] and [illegible]. This can be prevented by using a concrete of adequate workability and [illegible] compacting [illegible] of the concrete in the wall during pouring.

Figure 17–2 Typical cast-in-place column and wall shapes

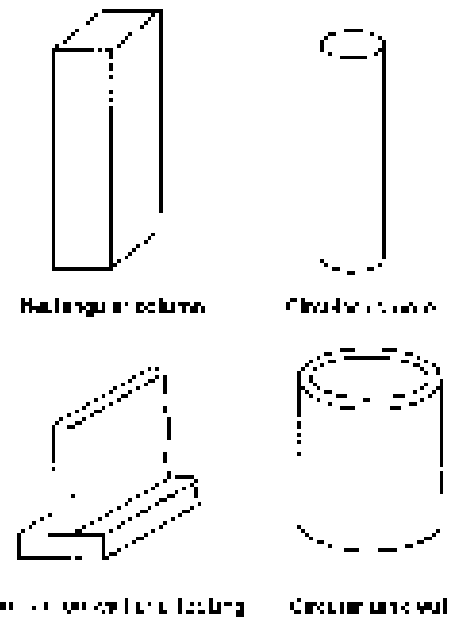

[illegible] the [illegible] of the [illegible] the [illegible] of [illegible] in the [illegible]. Figure [illegible] shows a [illegible] of [illegible] proposed by [illegible]. Note [illegible] method of [illegible] of the [illegible] in Figure [illegible]. When the [illegible] is used to the [illegible] the [illegible] the [illegible] used.

Floors and Roofs

There are [illegible] types of [illegible] systems used in [illegible]. [illegible] systems may be classified as [illegible] slabs, [illegible] slabs, [illegible] slabs,

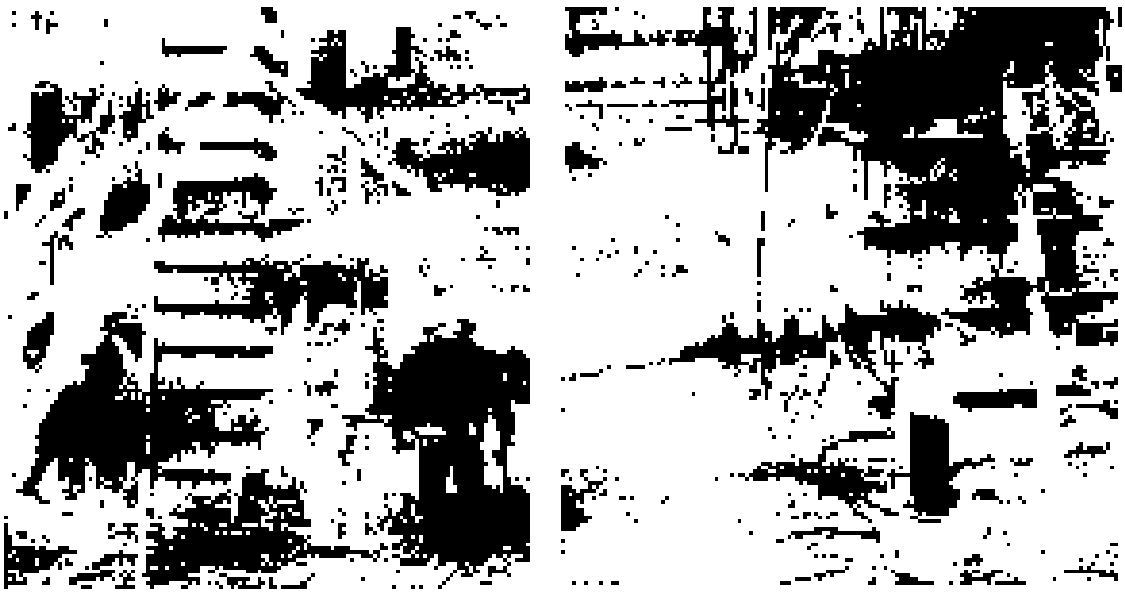

a. Pumping concrete into bottom of column form b. Pumping concrete in place in slab and beam construction

Figure 12–3 Pumping concrete into bottom of column form. (Courtesy of Gates & Sons, Inc.)

by means of pressure or vibration, down around further steel or other materials. This type of construction is referred to as *cast-in-place construction*.

Two Way Slabs. The principal type of horizontal slab in the waffle slab illustrated in Figure 12–3. Note that this is basically a joist slab with joists running in two directions.

Flat Slabs. Slabs may be reinforced directly by columns without the use of beams or joists. Such slabs are referred to as *flat slabs* or *flat plates*. A flat plate slab is illustrated in Figure 12–4a. A flat slab is illustrated in Figure 12–4b. Note that the flat slab has a column capital, which increases the column cross-section near the slab, while the flat plate slab does not. The column capital serves to strengthen the slab at the point of maximum stress. But it also increases the depth of the slab in proximity to the slab where it is needed.

Precast Concrete

Precast concrete is concrete that is poured into molds at a location other than its final place in a structure. It is used in a number of ways, including improving the quality of the concrete, speeding construction by removing the need for on-site forms, and making it possible to work in a controlled environment. Precast elements are usually lighter in weight than cast-in-place elements, and production economies may be made. Since standard shapes are commonly used, the repetitive use of formwork results

Figure 12-4 Floor slab (Courtesy of Concrete Reinforcing Steel Institute)

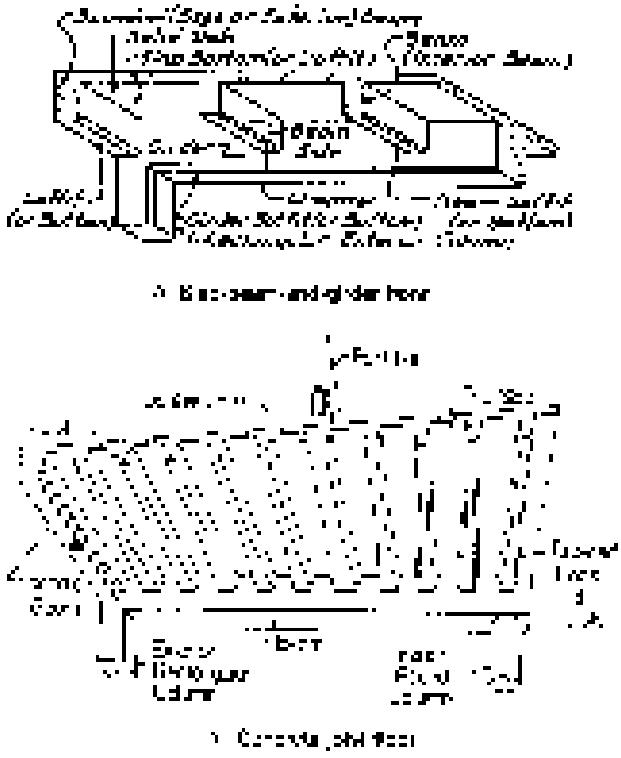

Figure 12-5 Waffle slab. (Courtesy of Concrete Reinforcing Steel Institute)

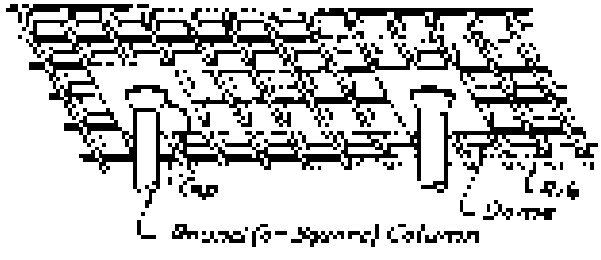

[illegible]

[illegible]

Figure 12-6 Flat slab and flat plate slab: Illustrations of Concrete Reinforcing Steel Institute.

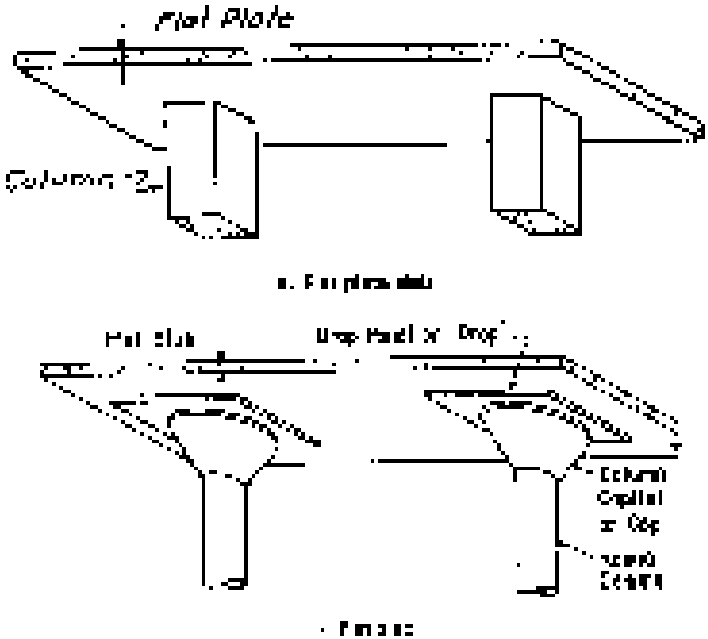

Figure 12-7 Precast beam and girder shapes.

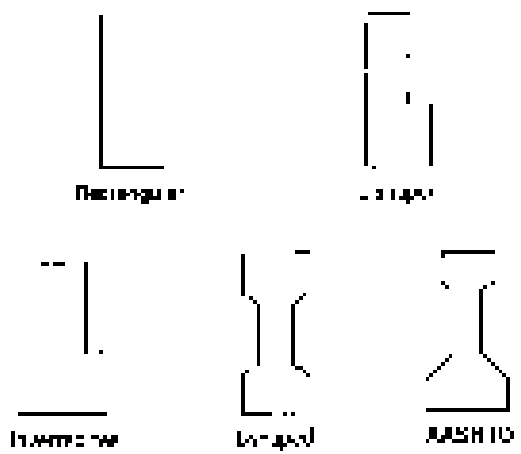

Precast concrete joists and planks are used for supporting roofing and floor loads. Joists are usually spaced more than 16 in. (400 mm) apart. Standard joists provide depths of 8 to 16 in. (200 to 400 mm) and lengths of 10 to 30 ft (3 to 9 m). Precast roof and floor units include flat, hollow core, rectangular, and double tee slabs. These shapes are illustrated in Figure 12-8. Concrete planks are commonly available in thicknesses of 1 to 4 in. (25 to 100 mm), widths of 12 to 48 in. (305 to 1220 mm), and lengths to 40 ft (12 to 12 m). Hollow core planks range from 6 to 12 in. (150 to 300 mm) in thickness, commonly 8 in. (200 mm), and can range from 4 to 48 in. (100 to 1220 mm) in width.

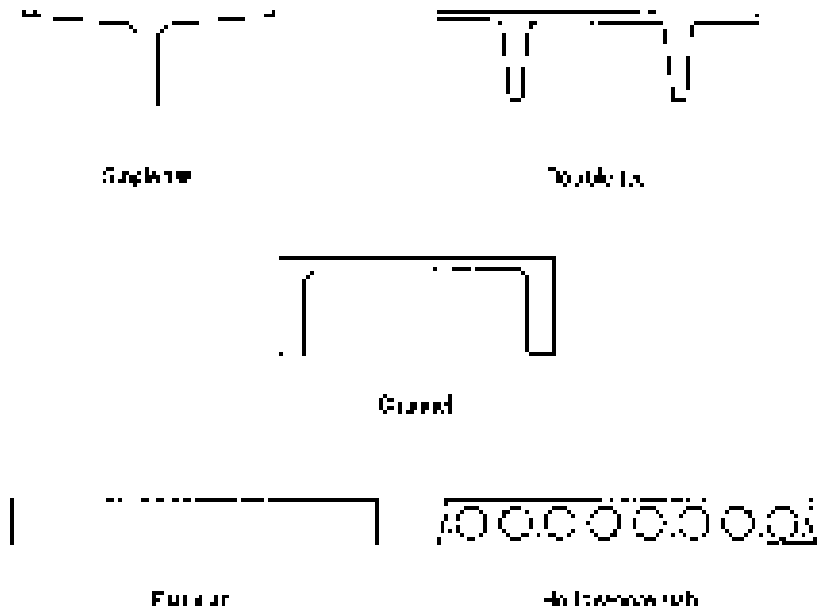

Figure 12.8 Formwork wale shapes.

Length of metal ties may range from 2 to 3 ft (0.6 to 1 m) depending on form [illegible] to 12 ft (3.7 m) or more. Two and double ties also are available in widths of 4 to 12 in. (0.2 to 0.3 m) and lengths of 21 to 42 in. (0.5 to 1.0 m) or up to 1000 to 1800 lb (450 to 800 kg).

Wall gang forms also are popular. Based on the size and shape, [illegible] the major use of panels was panels for [illegible] construction, in [illegible] wall construction, including [illegible] panels fit between the [illegible] forms for [illegible] wall. In this type of construction the wall [illegible] provide a stable platform [illegible] and [illegible] the wall [illegible] The building for [illegible] purposes [illegible]

Tilt-up construction is a special form of precast wall construction in which wall panels are cast horizontally on the jobsite and then [illegible] Wall panels are cast in [illegible] on the previously placed building floor [illegible] only enough space to provide [illegible] The floor slab serves as the bottom form for the panel. Panels may also be cast in [illegible] of the slab [illegible] A bond breaker is [illegible] applied to the slab [illegible] the tilt-up panel from sticking to the slab (Figure 12.9). [illegible] the tilt-up construction process.

Some suggestions for obtaining better results with tilt-up construction include:

Do

- Vary bracing [illegible]
- Keep [illegible] deviation [illegible]
- Vibrate the [illegible]

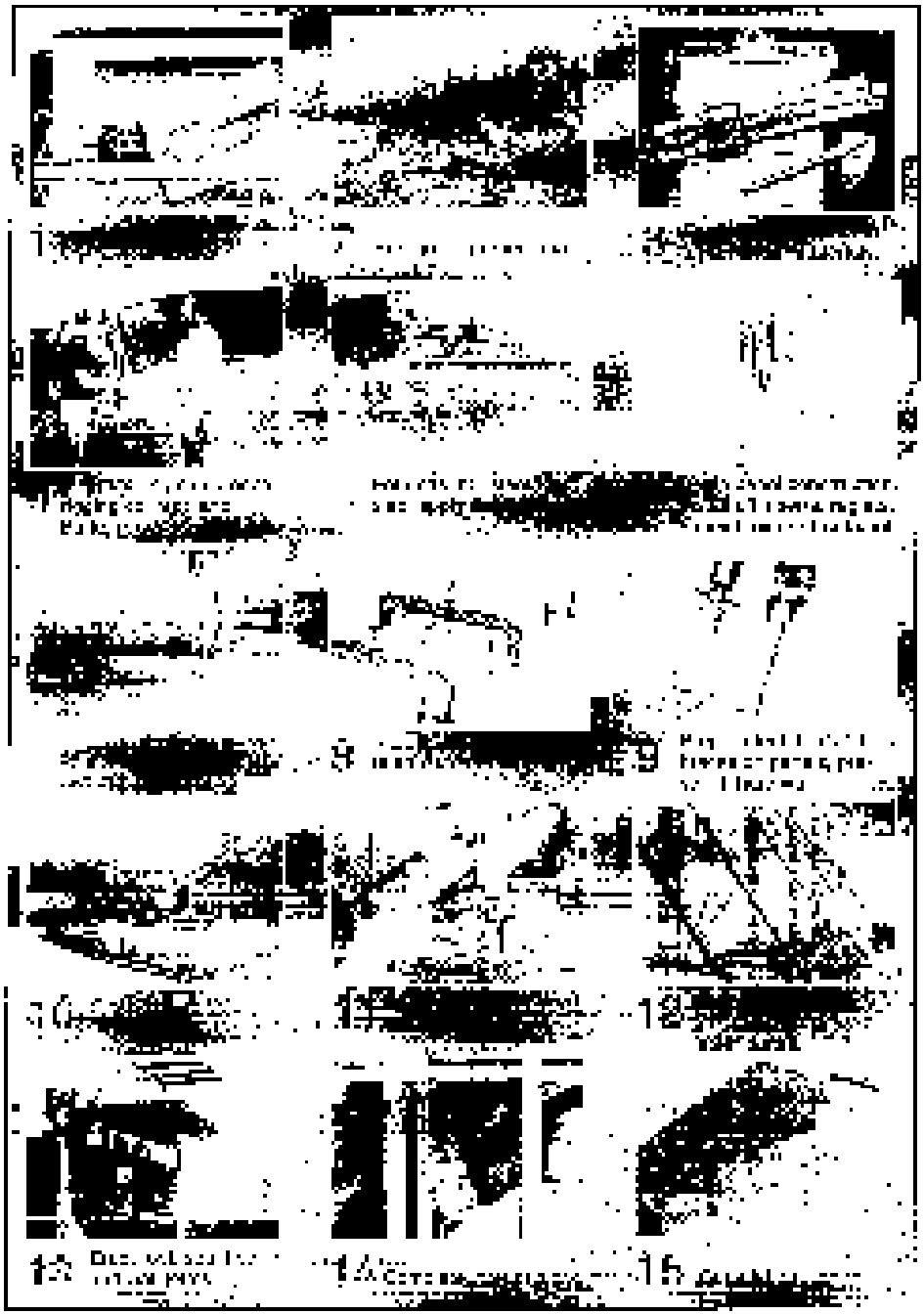

Figure 12.9 [illegible] (Courtesy of The Burke Company)

- Let concrete age at ambient temperature.
- Pour wall panels with the [illegible] formed side.
- Use lightweight forms when lifting panels that have been [illegible] with windows and other openings.

Don't

- Use steel forms [illegible] tilt-up wall panels.
- Pour [illegible] panels.
- Move panels further than necessary when lifting wall panels.
- Lay out panels [illegible] after lifting.

Prestressed Concrete

Prestressed concrete is concrete to which an initial compressive load has been applied. Since concrete is quite strong in compression but weak in tension, prestressing serves to increase the capacity of a member for flexural loads or to reduce allowable tensile stresses as noted. Figure 12-10 illustrates the stress pattern in a beam section in using steel cables in a prestressed member. The use of prestressing in a concrete member under permits smaller, lighter members to be used in supporting a given load, reducing the cost of the structure. Since the member is always loaded in compression, prestressing results in a more efficient use of the concrete. The application of prestressing to precast concrete has led to higher material, equipment and labor investments in the production of prestressed components. Nevertheless, the use of prestressing, particularly in precast structural members, has become widespread.

There are various methods for producing prestress in concrete members, but two are most common. *Pretensioning* places the prestressing [illegible] steel cables, usually in the form of strands, in the forms before the members are poured. After

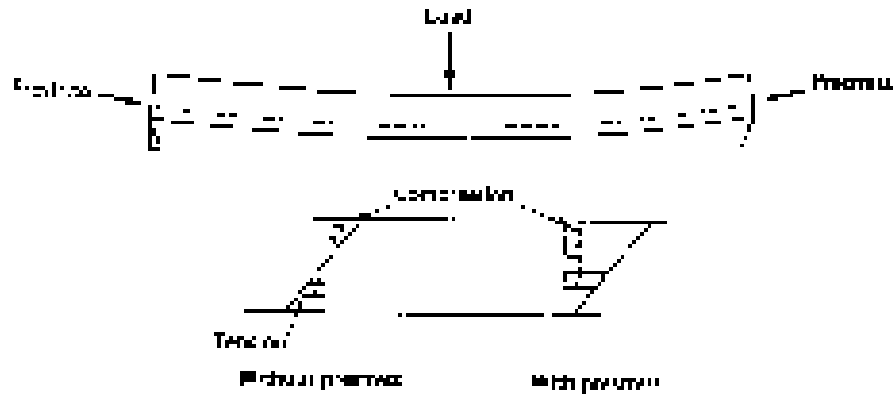

Figure 12-10 Stress in a prestressed simple beam.

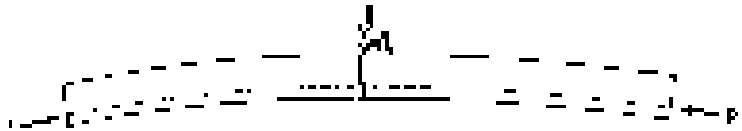

Figure 12–11 [illegible] Lead to the corner

the [illegible] material, the [illegible] device [illegible]. [illegible] the [illegible] and the [illegible] the [illegible] in [illegible] the [illegible] [illegible]. [illegible] places the [illegible] [illegible] [illegible]

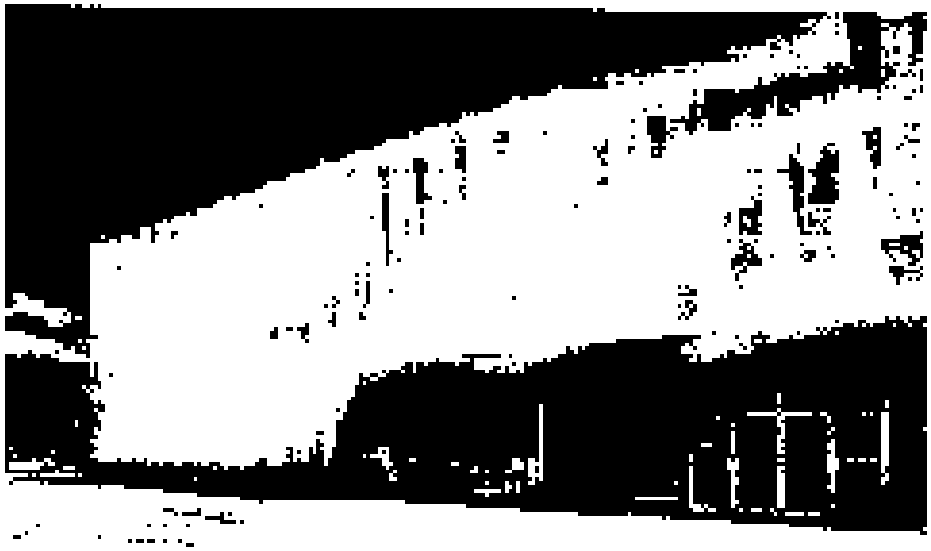

Figure 12-12 Application of architectural concrete (Courtesy of Lafarge and Cement Association)

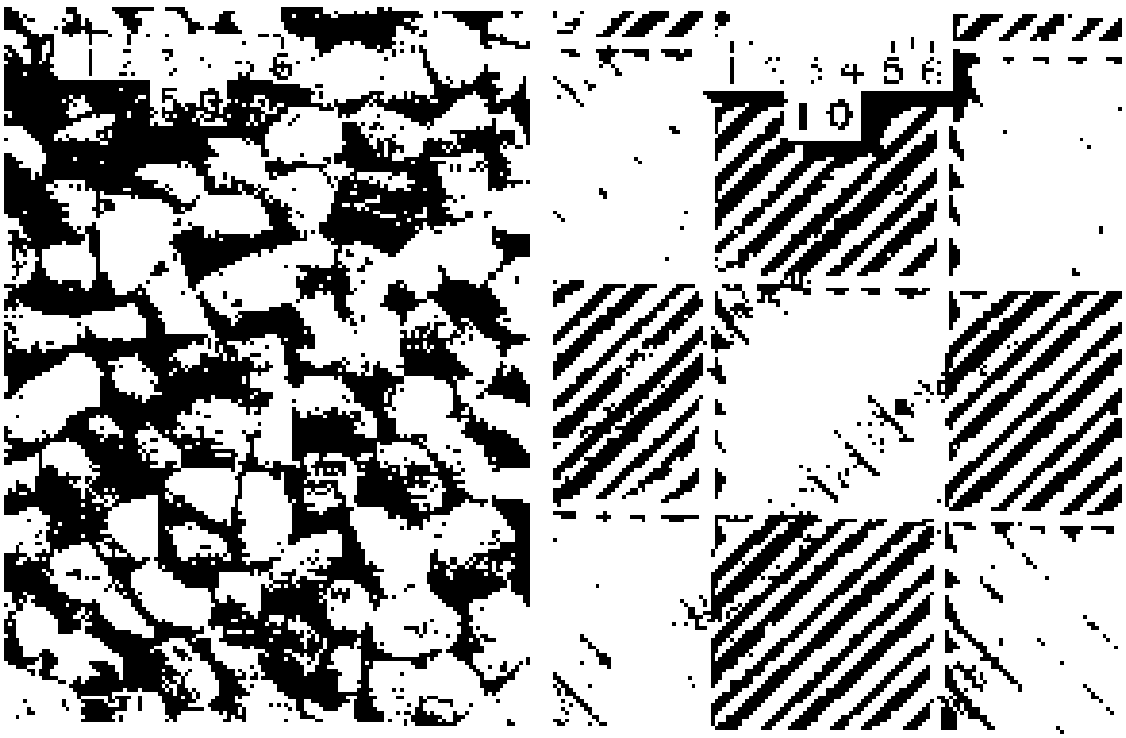

Figure 12-13 Architectural concrete surfaces (Courtesy of Portland Cement Association)

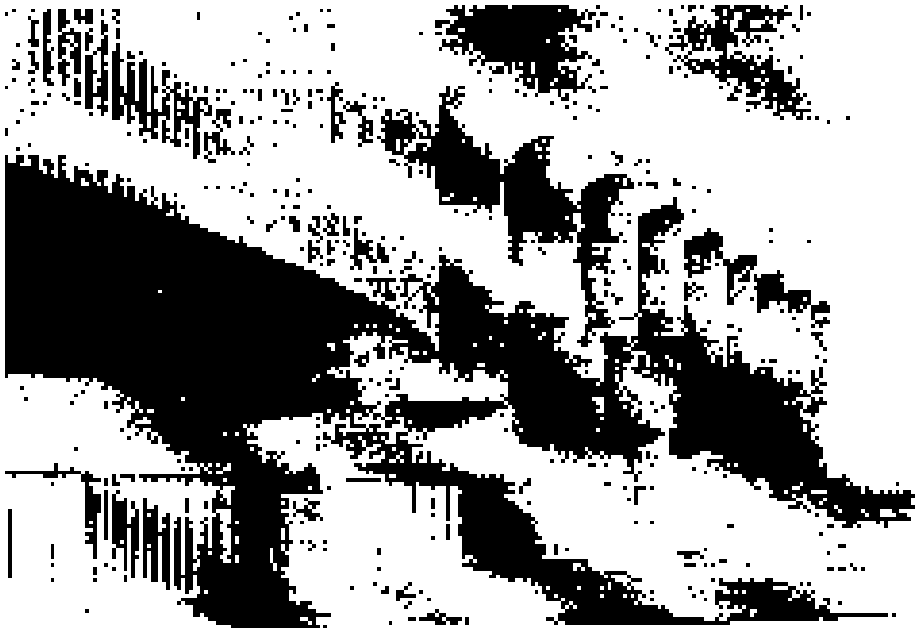

Figure 12–14 Mechanically produced concrete surface texture. (Courtesy of Portland Cement Association)

[illegible]

12–2 CONCRETE CONSTRUCTION PRACTICES

[illegible]

Transporting and Handling

[illegible]

Figure 12–15. Concrete pump and truck mixer. (Courtesy of Morgan Mixer, Inc., Long Beach, Calif.)

[illegible]

[illegible]

[illegible]

[illegible]

[illegible]

[illegible]

Placing and Consolidating

[illegible] placing concrete [illegible] is called placing. Before placing concrete, the [illegible] surface [illegible] must be properly prepared. Concrete [illegible] surfaces [illegible] the [illegible] and [illegible] the surface.

When concrete is placed directly [illegible], the [illegible] should be [illegible] from the [illegible]. When placing [illegible] concrete [illegible] the [illegible] should be [illegible] to prevent [illegible] the [illegible] layer. To improve bonding between the layers, the surface of the [illegible] concrete should be roughened [illegible] layer [illegible] is placed. Concrete is usually poured in layers 8 to 24 in. (15 to [illegible] cm) thick [illegible] pumping [illegible] time of pour. When pouring [illegible] it is important that the lower layer [illegible] initial set before the next layer is poured.

As explained on page 7, the [illegible] workability [illegible] of concrete are largely determined by the [illegible] to the concrete mix. Tamping [illegible] the purpose of improving the workability of the [illegible]. If [illegible] the mix design should be modified accordingly. The addition of one of the workability agents mentioned in Chapter 7 [illegible] improve the workability.

Concrete may [illegible] by spading it [illegible]. Generally the [illegible] process is designed [illegible] the American Concrete Institute [illegible] roller screed, [illegible] screed, [illegible] screed, [illegible]

the gate closed, the mixture is [illegible] and [illegible] within the prepared opening, allowing concrete to flow into place. The [illegible] the gate [illegible] from flowing from [illegible] the bottom and [illegible] the [illegible] in the [illegible].

Consolidation is the process of removing air voids from the mix and its placement. [illegible] mechanically vibrated during placement, but some voiding or spalling may be [illegible]. Unfortunately, [illegible] vibration [illegible] in [illegible] the concrete [illegible] vibration [illegible] be [illegible] more [illegible] [illegible] this [illegible] [illegible] vibration [illegible] be [illegible] into the [illegible] and [illegible] penetrate several [illegible] in the previously placed layer [illegible]. The vibrator should be [illegible] and [illegible] to prevent [illegible] concrete paste becomes visible [illegible] of the [illegible].

Finishing and Curing

Finishing is the [illegible] of bringing the surface of concrete to the [illegible] and smooth [illegible]. Initial surface finishes include screeding, floating, troweling, and [illegible]. Screeding is the process of striking off the concrete to bring the concrete surface to the [illegible] grade. When the concrete has hardened sufficiently, the surface [illegible] with a wood or metal [illegible]. Tools of many [illegible] and [illegible] are available, including [illegible] [illegible] [illegible]

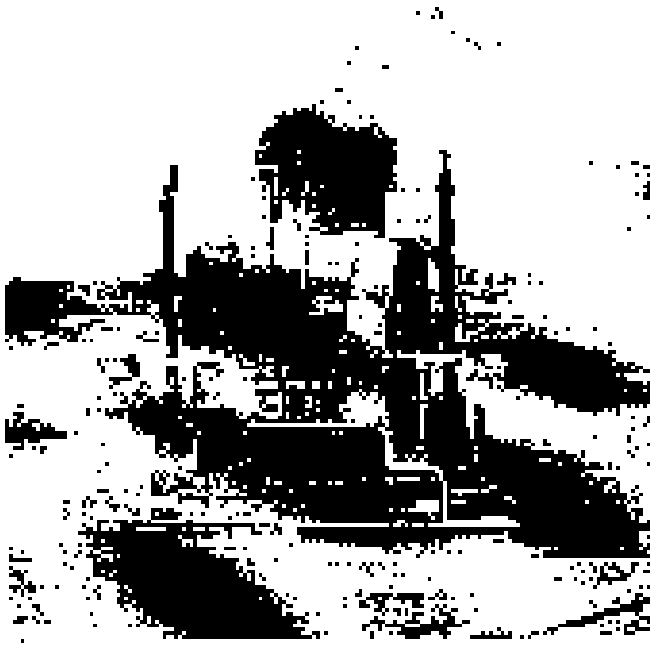

FIGURE 12-16 Roller compactor in operation. (Courtesy of Dresser Co. paving)

shrinkage, reduced permeability, and increased resistance to freeze/thaw damage. When the vacuum dewatering process was introduced and patented in the United States in 1955, it has been widely used in this country. Recent improvements in the equipment and in the process have led to increased use of the process in both Europe and the United States.

When concrete is placed in large quantities, consideration may be given to placing it by pumping or conveyor. Mechanical finishing may be carried out by either finishers or screeding machines. Large areas, particularly pavements, are finished by machine. Figure 12-17 shows a large slab being placed directly from a truck mixer and finished by machine.

Hot-Weather Concreting

The rate of hardening of concrete is greatly increased when concrete temperatures are appreciably higher than normal temperatures of about 60°F (16°C) to 70°F (21°C). Nearly all specifications limit 120°F (49°C) to concrete delivered at the job site. In some cases, specifications limit concrete temperature to 90°F (32°C). Higher temperatures increase the amount of water required for a given consistency, and additional water must also be added to the mixture to offset the loss due to evaporation during transportation. High temperatures, especially when accompanied by winds and low humidity, greatly increase the rate of evaporation and often result in premature stiffening of the concrete. Several precautions may be taken to minimize the effect of high temperatures on concrete

Figure 12-17. Roller Screed being used on large concrete slab. (Courtesy of Terex Roadbuilding)

exposure. The temperature of the placed concrete may be lowered by cooling the mixing water and/or applying ice to the mix. Heat generating hydration may be reduced by using Type IV (low heat) cement by adding a retarder. Admixture ring agents, water reducing agents, or pozzolans may be used to increase workability of the mix without changing water content. Air entrainment also reduces bleeding. Concrete may be fine-finished or coated with curing compound. Finishing operations will be delayed until concrete temperature is acceptable after placement. Moist curing should commence immediately after finishing and continue for at least 7 days.

Cold-Weather Concreting

The problems of cold weather concreting are essentially opposite to those of hot weather concreting. Concrete should not be placed on a frozen surface and must be allowed to freeze during its first 24 hours. Freezing forms permanent damage and loss of strength. Concrete forms are northern, steel, wood, or some of these, or heavy enough to prevent internal freezing. Specifications may require that, when air temperature is 40°F (4°C) or less, concrete be placed at a temperature of 50°F (10°C) and not allowed to drop below this minimum for at least 5 days. However, the American Concrete Institute (ACI) recommends that a temperature of 70°F (21°C) be maintained for 3 days and 50°F (10°C) be maintained for 7 days. Heavier, more massive structures may be determined by more normal temperatures. Admixtures such as Type III (high early strength) cement or calcium chloride may be used to

[illegible]

12–3 CONCRETE FORMWORK

General Requirements for Formwork

[illegible]

Typical Formwork

[illegible]

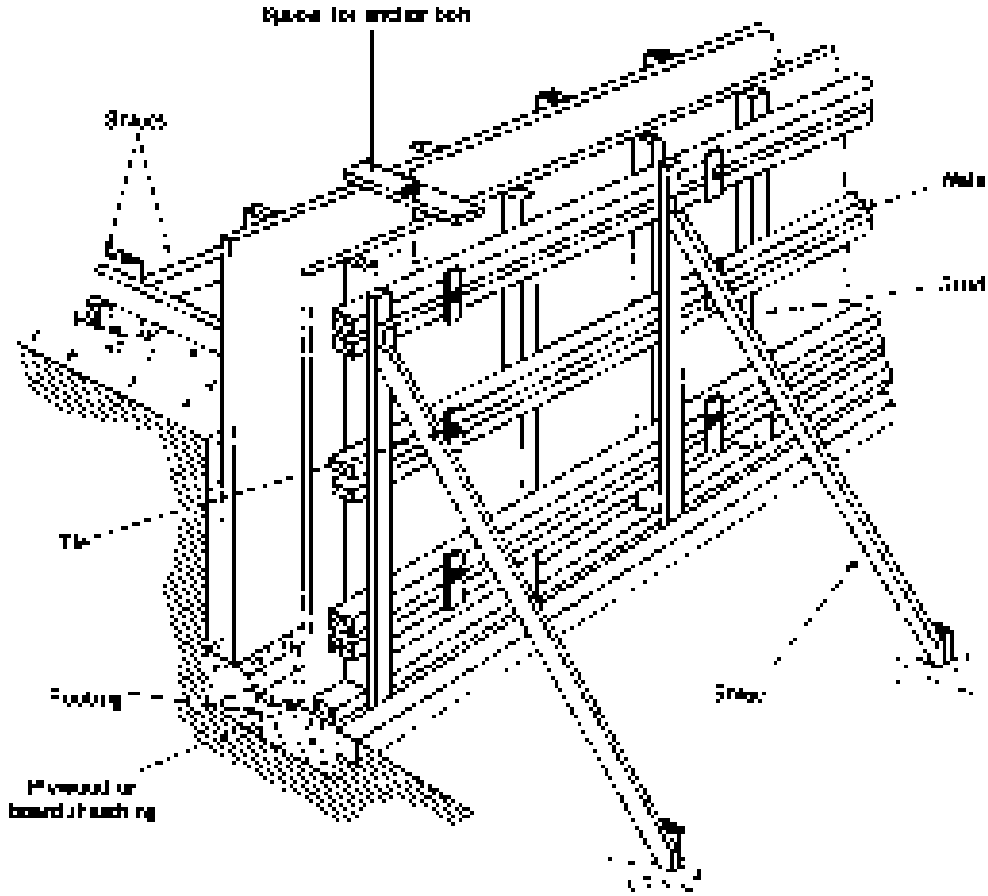

Figure 12-26 Typical wall form.

i. Figure 12-23 [illegible] may be constructed of metal, wood, and [illegible] Form ties are [illegible] Recommended column [illegible] with steel [illegible] fiberglass. [illegible] Spacing of [illegible] pumping [illegible] form [illegible]

Figure 12-24 illustrates a typical [illegible] floor or deck slab. Form and [illegible] components shown [illegible] in Figure 12-22. [illegible] form [illegible] Section [illegible] provided [illegible] commercial [illegible] Figure 12-25. [illegible] Figure 12-26 [illegible] metal or plastic. [illegible] Figure 12-27.

Figure 12-19 Typical form ties.

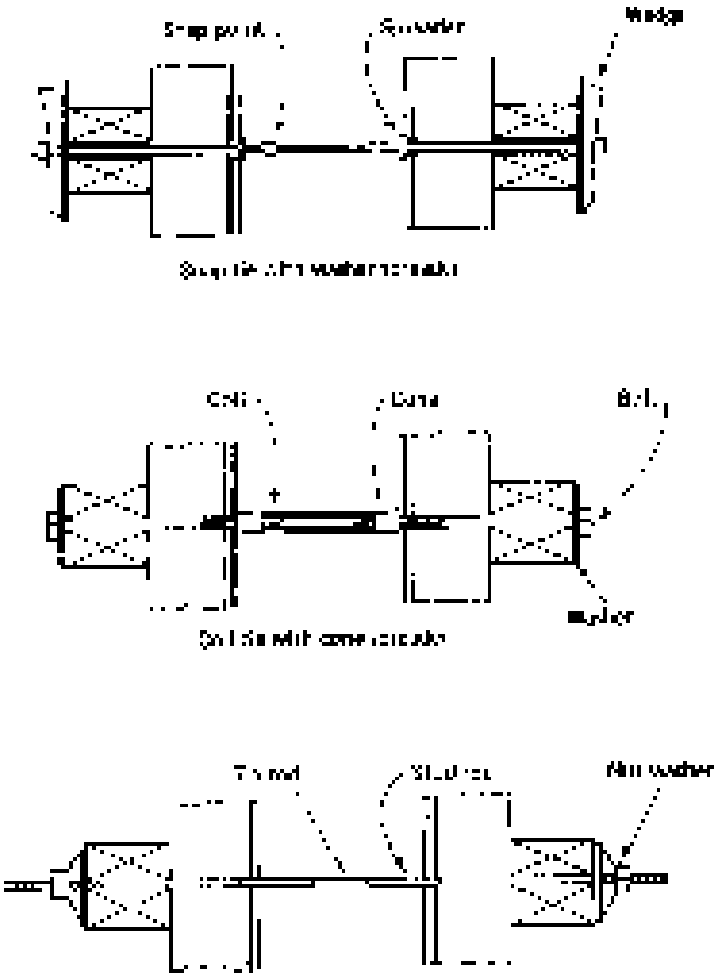

Minimizing Cost of Formwork

Since formwork may consume [illegible] of the cost of concrete construction, it is essential to the economical plan for an entire building developed at the very outset. Careful comparison should be made of all feasible form systems, considering the cost of formwork, the cost of concrete, the cost of reinforcement, the cost of erection, the number of uses and the cost of maintenance, as well as the cost of formwork, erection, and removal. The foreman and planner must be the central figures in this study and must work out the minimum number of uses that will be required for the construction.

In general, large formwork costs will arise from the use of forms. Multiple-use forms may be either standard commercial types or custom-made for the construction. Commercial standard forms should be considered [illegible]

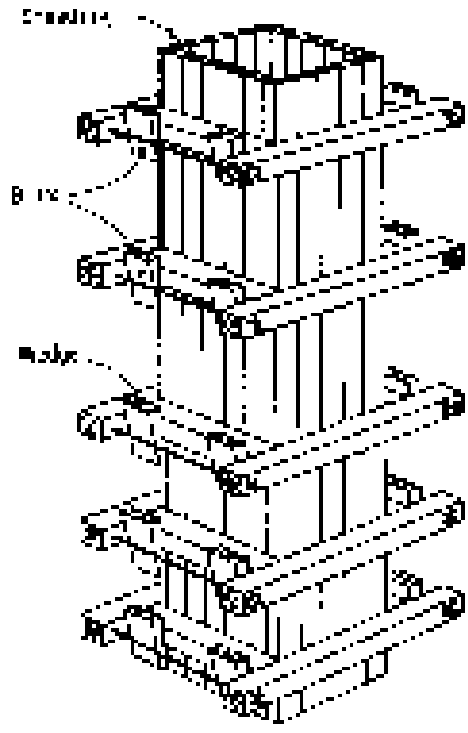

Figure 12-20 Typical column form. (U.S. Department of the Army)

whenever possible. Plywood forms, large sections of formwork moved by crane from one position to another, are often economical in repetitive types of concrete construction. When repetitive, the use of slip forms and other construction methods should not exceed economically natural forming costs. A slip form is pictured in Figure 12-21.

Construction Practices

Forms must be constructed with high points to prevent the loss of concrete mortar which may result in honeycombing before concrete is poured. Forms must be braced both horizontally and vertically and located to the structural geometry. Form alignment should be carefully monitored during construction, and adjustments made if necessary. Where a curved form is used, it is important that the layout of the form will be satisfactory. Form ties should be used to keep the form in place. Use of form ties eliminates the need for placing concrete. Use of form ties eliminates the need for placing concrete. Use of form ties eliminates the need for placing concrete

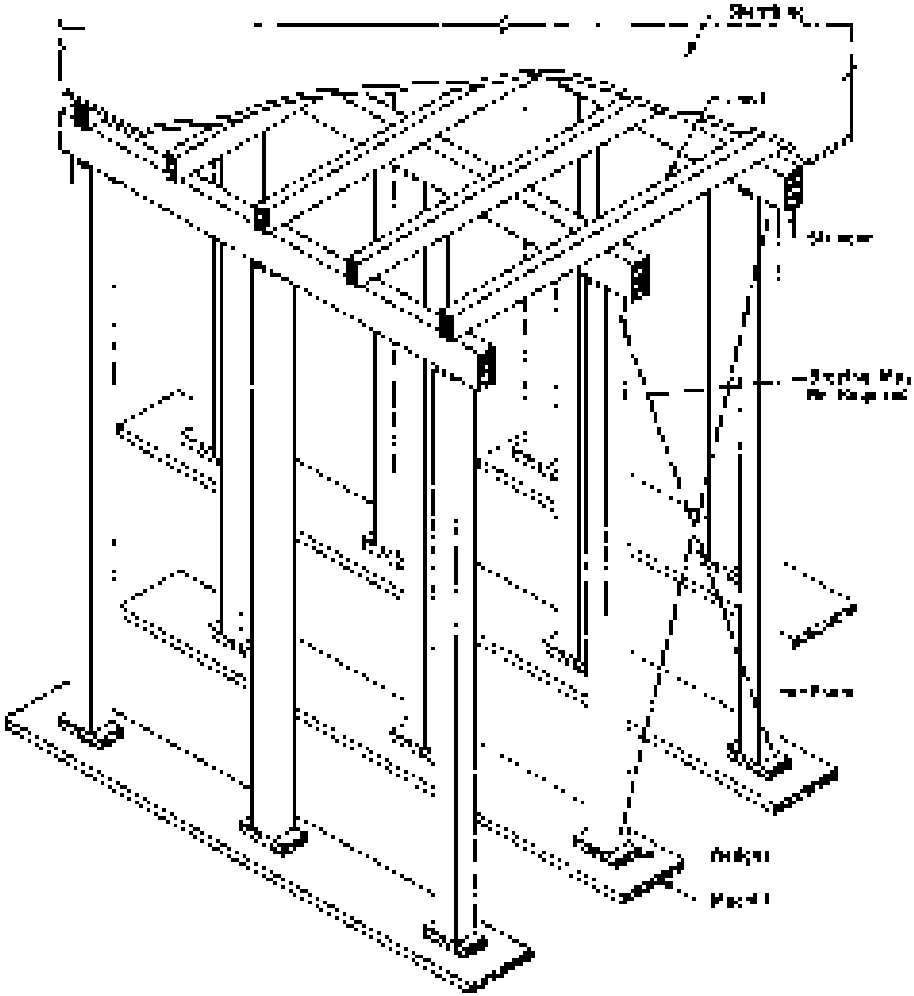

Figure 12-21 Form for precast concrete construction (American Concrete Institute)

concrete is not harmful to the form as long as it becomes stiff enough to be self-supporting. When properly formed, the hardened concrete will fill the form completely and produce a smooth, uniform surface. This is called for if the concrete is to be used as a finished surface. Since the concrete begins to harden, excessive pressure on the form may result in bulging or crushing of the form.

Concrete forms are removed when the concrete has developed sufficient strength. When normal portland cement is used, forms can usually be taken down in about two days. Some of the forms must be left in place longer if the concrete is to be used for a load-bearing member.

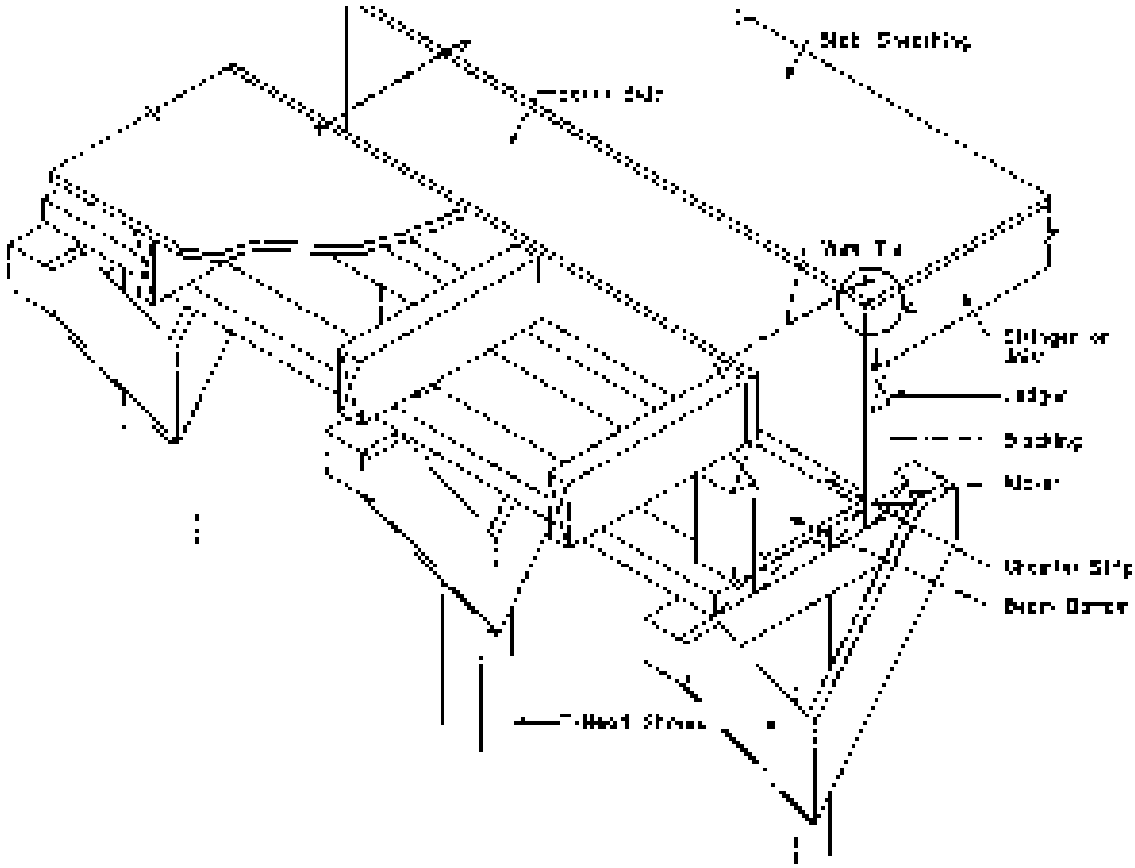

Figure 12-22 Beam and slab form (courtesy of American Concrete Institute)

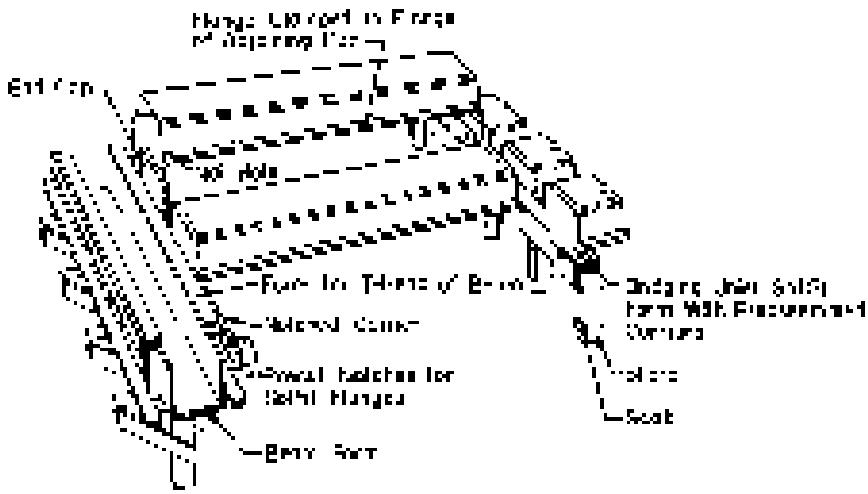

Figure 12-23 Ribbed slab form (courtesy of American Concrete Institute)

Figure 12-24. Two-way slab 5 in. (Courtesy of Portland Cement Concrete Institute)

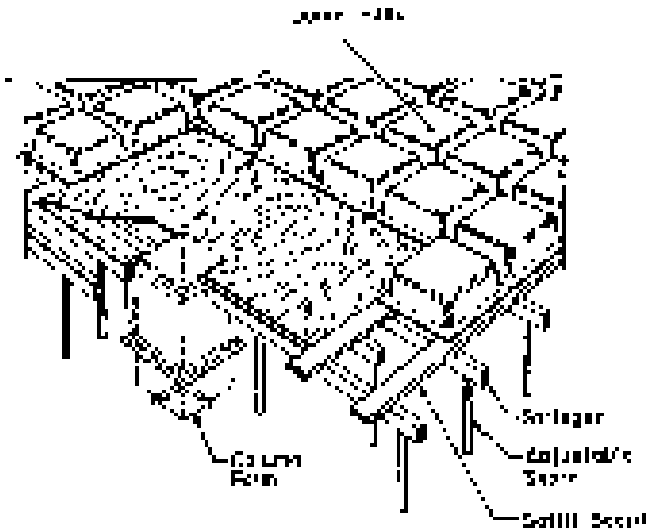

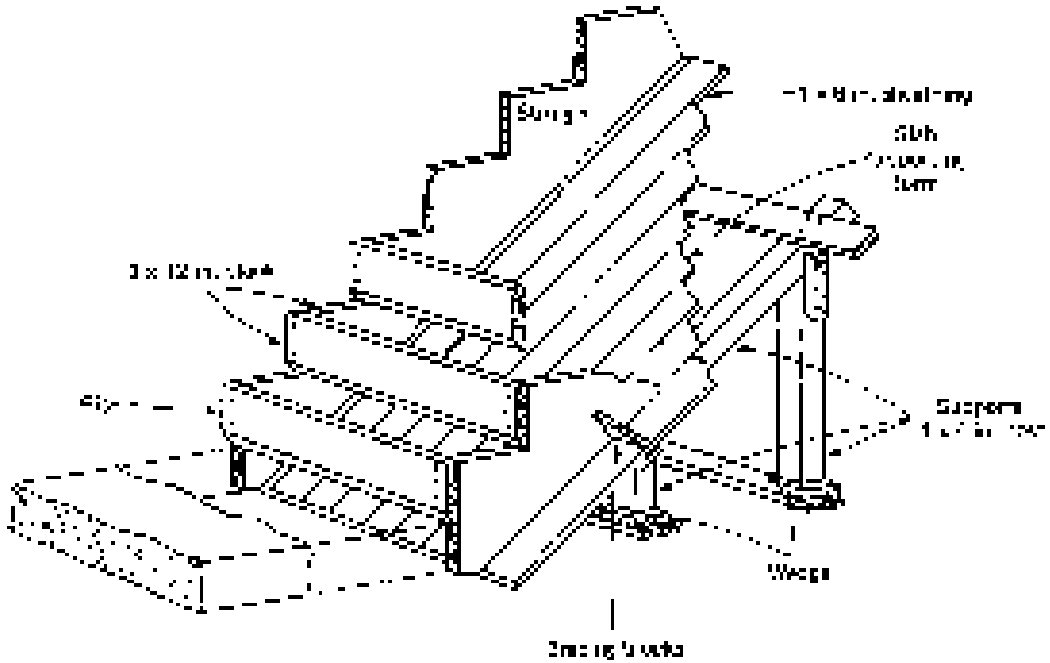

Figure 12-25. Wood form for stairway. (U.S. Department of the Army)

Figure 12-26 Repositioning a tilt-up panel. Courtesy of LM Herex Construction

Expansion and Control Joints

Expansion and control joints are used in part to differentiate the movement of one section of a structure from another and to accommodate thermal expansion and contraction, and foundation settlement. Inadequate joints should be avoided. Cracks develop in concrete slabs if the slab is restrained in the horizontal plane and is prevented from contracting. Expansion joints provide the slab a means of moving without restraint. Control joints control the location of the initial crack. Control joints are placed at regular intervals and at right angles to each other. Joints must be wide enough to allow the movement to occur. Generally, the joints are approximately 1/4 in. (6 mm) wide. Joints should be sealed and the material must flow or move with the concrete. Expansion and control joints are shown in Fig. 12-27.

Formwork Safety

The dangers and serious consequences of formwork failure underscore the importance of proper attention to the aspect of construction safety. Safety considerations for formwork design are contained in Chapter 12. The following are considerations that should be observed in constructing formwork.

1. Provide adequate foundations for all formwork. Place mudsills under all shores that rest on the ground. Typical mudsill is shown in Figure 12-27. Check concrete-supporting capacities to ensure that formwork does not fail due to overloaded or weak concrete.
2. Provide adequate bracing of formwork to prevent any overall or shore and other critical buckling. The number of formwork failures caused especially critical

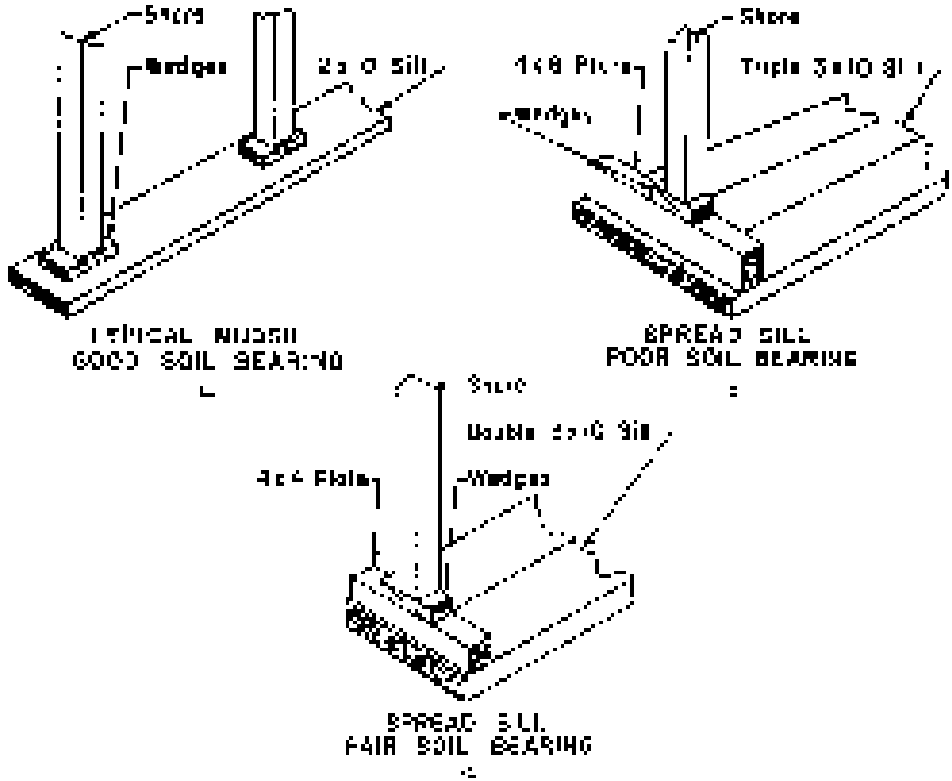

Figure 12-27 Mudsills. (Courtesy of American Concrete Institute)

connections. Vibration from power equipment or concrete transmitted through the form ties to adjacent equipment or structures should be avoided.

- Correct number and location of shores placed so that design loads are not exceeded.
- Shores and form supports are not removed before the concrete has developed the required strength. The necessary posting or supervision of shores or structural members to be left in place or specially strengthened to carry the loads imposed on them by removal of shores should be specified by the designer. Only a limited area should be exposed and removed at one time. No construction loads should be allowed on a partially hardened concrete while removing or moving shores. Adequate bracing must be provided for stability.
- When placing prestressed tendons, a minimum clearance must be allowed to avoid injury caused by bursting of the tendons by wedge forces.
- Protecting workers from the danger of falling materials and equipment. Adequate protection should be provided by using a safety net, or a safety belt or other equipment.

12-4 REINFORCING STEEL

Concrete Reinforcing Steel

Concrete reinforcing steel is available in standard size bars, spirals, and welded wire reinforcing, commonly called wire fabric (WWF).

Reinforcing Bars

Reinforcing bars are usually deformed, that is, they are manufactured with lugs or other projections on their surfaces to bond with the concrete and prevent slippage. Deformations are specified under ASTM A615 for billet-steel bars. Standard sizes listed in Table 12-1. Note that the size number of the bar is equal to its nominal diameter in eighths of an inch. This makes it easy to remember.

Reinforcing steel is usually ASTM Grade 60 reinforcing bars, that is, the yield stress is 60 ksi (414 MPa). The stress-strain diagram is in Figure 12-2a. The grade of reinforcing steel corresponds to its yield point in thousands of pounds per square inch.

Welded Wire Fabric

Welded wire fabric is commonly used for slab reinforcement. It is available with smooth or deformed wires. Wire is made from bright wire or galvanized wire is specified.

Welded wire fabric is designated by the letters WWF, followed by the spacing of the longitudinal wires [in. (mm)], the spacing of transverse wires [in. (mm)], the nominal wire size [gage (mm)], and the cross-sectional area of wire [in.^{2}/ft (mm^2/m)]. More recently, designation by the letter M preceding the wire size, so that wire size is given in hundredths of an inch. Deformed wire is indicated by the letter D preceding the wire size. For example, WWF 6×6-D8×D4 (152×152-MD5.16×MD2.58) denotes a square wire

Table 12-1 ASTM standard reinforcing bar sizes

Size Number	Metric Size Number	Weight lb/ft	Weight kg/m	Diameter in.	Diameter mm	Section Area in.^{2}	Section Area mm^2
2	10	0.376	0.560	0.375	9.52	0.11	71
4	13	0.668	0.994	0.500	12.70	0.20	129
5	16	1.043	1.552	0.625	15.88	0.31	200
6	19	1.502	2.235	0.750	19.05	0.44	284
7	22	2.044	3.042	0.875	22.22	0.60	387
8	25	2.670	3.973	1.000	25.40	0.79	510
9	29	3.400	5.060	1.128	28.65	1.00	645
10	32	4.303	6.404	1.270	32.26	1.27	819
11	36	5.313	7.907	1.410	35.81	1.56	1006
14	43	7.650	11.384	1.693	43.00	2.25	1452
18	57	13.600	20.238	2.257	57.33	4.00	2581

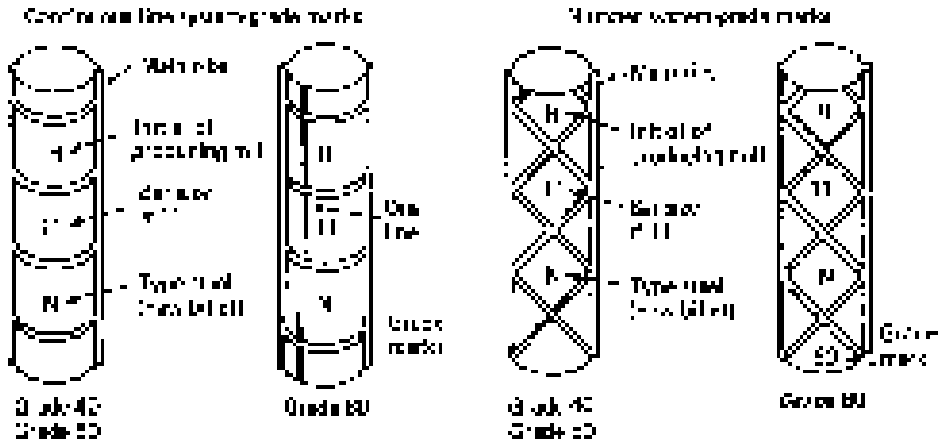

Figure 12–28 Welded wire fabric (courtesy of Concrete Reinforcing Steel Institute).

patterns. Widths of sheets are in multiples of 2 in. (152 mm) to 24 in. (610 mm). Both wire and bar sizes are identified by designation numbers. Requirements for welded wire fabric are given in ASTM A185 and A497.

Spirals

Spirals are available in three standard rod sizes: ⅜ in. (9.5 mm), ½ in. (12.7 mm), and ⅝ in. (15.9 mm). Standard spiral diameters provided by most suppliers range from 12 in. (305 mm) to 36 in. (914 mm). Pitch (distance between centers of adjacent spiral turns) ranges from 1 in. (25.4 mm) to 3½ in. (88.9 mm) in 1/2-in. (12.7-mm) increments. Steel stress allowable values are 40, 60, and 75%.

Placement of Reinforcing

Slab concrete is weak in tension and must be reinforced. Reinforcing steel is used primarily to resist tensile stresses and to prevent cracking or failure of the concrete from structural or thermal causes. Cracking may be caused by shrinkage of concrete as it hardens and by temperature changes as well as by bending and stress cracks. Typical placement of the reinforcing steel in one-way structural slab is illustrated in Figure 12–29.

To provide protection of the reinforcing steel against corrosion and fire, a minimum cover of concrete must be provided. Bending must usually specify minimum cover requirements. The American Concrete Institute (ACI) recommends the following minimum cover requirements in concrete specified:

- Slabs, walls, and walls not exposed to weather or ground: ¾ in. (19 mm)
- Beams, girders, and columns not exposed to weather or ground: 1½ in. (38 mm)
- Concrete poured against earth and exposed to earth or weather: 3 in. (76 mm) for #6 through #18 bars; 2 in. (51 mm) for bars smaller than #6.

Table 12-2 Steel wire data for welded wire fabric

Wire Size Number		Diameter		Area		Weight	
Smooth	Deformed	in.	mm	sq in.	mm²	lb/ft	kg/m
W31	D31	0.628	16.0	0.31	200	1.054	1.569
W30	D30	0.618	15.7	0.30	194	1.020	1.517
W28	D28	0.597	15.2	0.29	187	0.985	1.465
W26	D26	0.575	14.6	0.26	168	0.894	1.330
W24	D24	0.553	14.0	0.24	155	0.816	1.214
W22	D22	0.529	13.4	0.22	142	0.748	1.113
W20	D20	0.505	12.8	0.20	129	0.680	1.012
W18	D18	0.479	12.2	0.18	116	0.612	0.911
W16	D16	0.451	11.5	0.16	103	0.544	0.810
W14	D14	0.422	10.7	0.14	90	0.476	0.708
W12	D12	0.391	9.9	0.12	77	0.408	0.607
W11	D11	0.374	9.5	0.11	71	0.374	0.557
W10	D10	0.357	9.1	0.10	65	0.340	0.506
W9.5		0.348	8.8	0.095	61	0.323	0.481
W9	D9	0.338	8.6	0.09	58	0.306	0.455
W8.5		0.329	8.4	0.085	55	0.289	0.430
W8	D8	0.319	8.1	0.08	52	0.272	0.405
W7.5		0.309	7.8	0.075	49	0.255	0.379
W7	D7	0.299	7.6	0.07	45	0.238	0.354
W6.5		0.288	7.3	0.065	42	0.221	0.328
W6	D6	0.276	7.0	0.06	39	0.204	0.304
W5.5		0.265	6.7	0.055	35	0.187	0.278
W5	D5	0.252	6.4	0.05	32	0.170	0.253
W4.5		0.238	6.1	0.045	29	0.153	0.227
W4	D4	0.225	5.7	0.04	26	0.136	0.202
W3.5		0.211	5.4	0.035	23	0.119	0.177
W3		0.195	4.9	0.030	19	0.102	0.152
W2.5		0.178	4.5	0.025	16	0.085	0.126
W2		0.159	4.1	0.020	13	0.068	0.101
W1.4		0.134	3.4	0.014	9	0.048	0.071

- Concrete placed without [illegible] directly on the ground [illegible] cover.
- At least one longitudinal wire cover would be used in [illegible] cases.

The reinforcing steel must be placed [illegible] the [illegible] specified by the designer. Generally, placement tolerances required by the Concrete Reinforcing Steel Institute (CRSI) include:

- Spacing of outside longitudinal and transverse bars, ties, and stirrups: ±1 in. (±25 mm).
- Longitudinal position of bars or ties:
  Standard hooks: ±2 in. (±51 mm).
  Other end or bend details: ±[illegible] in. (±[illegible] mm).

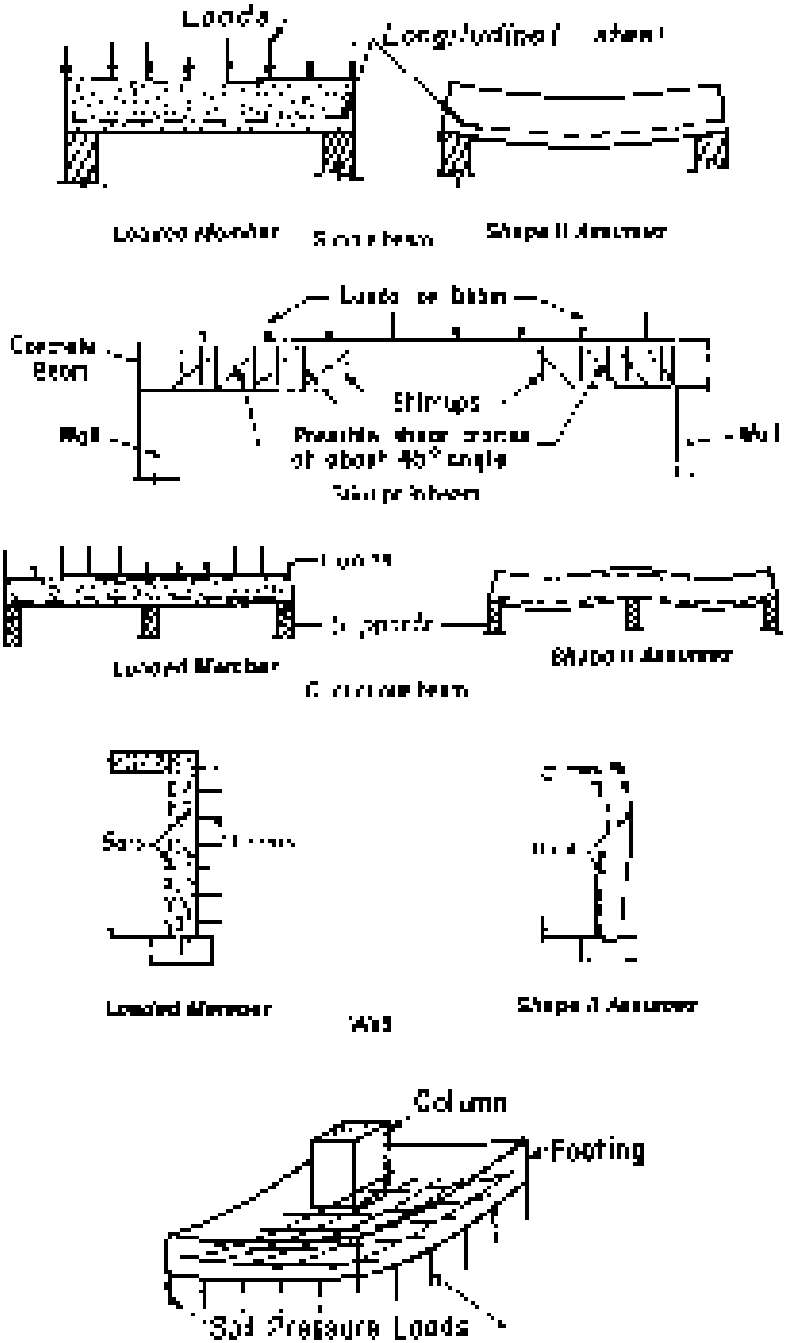

Figure 12-29 Placement of reinforcing steel. (Courtesy of Concrete Reinforcing Steel Institute.)

Symbol	Bar support dimension	Special support	Standard uses
SB	[illegible]	Slab bolster	[illegible] and 2 in. [illegible] in. and 10 ft. lengths
SBL*	[illegible]	Slab bolster, long	Same as SB
CB	[illegible]	Beam bolster	[illegible]
BBC*	[illegible]	[illegible]	Same as BB
[illegible]	[illegible]	[illegible]	[illegible]
[illegible]	[illegible]	Individual	[illegible]
[illegible]	[illegible]	Individual high chair	[illegible]
[illegible]*	[illegible]	[illegible] individual chairs	[illegible]
CHC	[illegible]	Continuous high chair	Same as HC in 5 foot and 10 foot lengths
CHCL*	[illegible]	[illegible] high chair support	Same as CHC
CHCP*	[illegible]	[illegible] high chair for metal deck	[illegible]
[illegible]**	[illegible]	[illegible]	[illegible]

* Available in Class A only, except in special sizes.
** Available in Class A only, with protective coating and bearing legs.

Figure 12-30 Wire bar supports (Courtesy of Concrete Reinforcing Steel Institute)

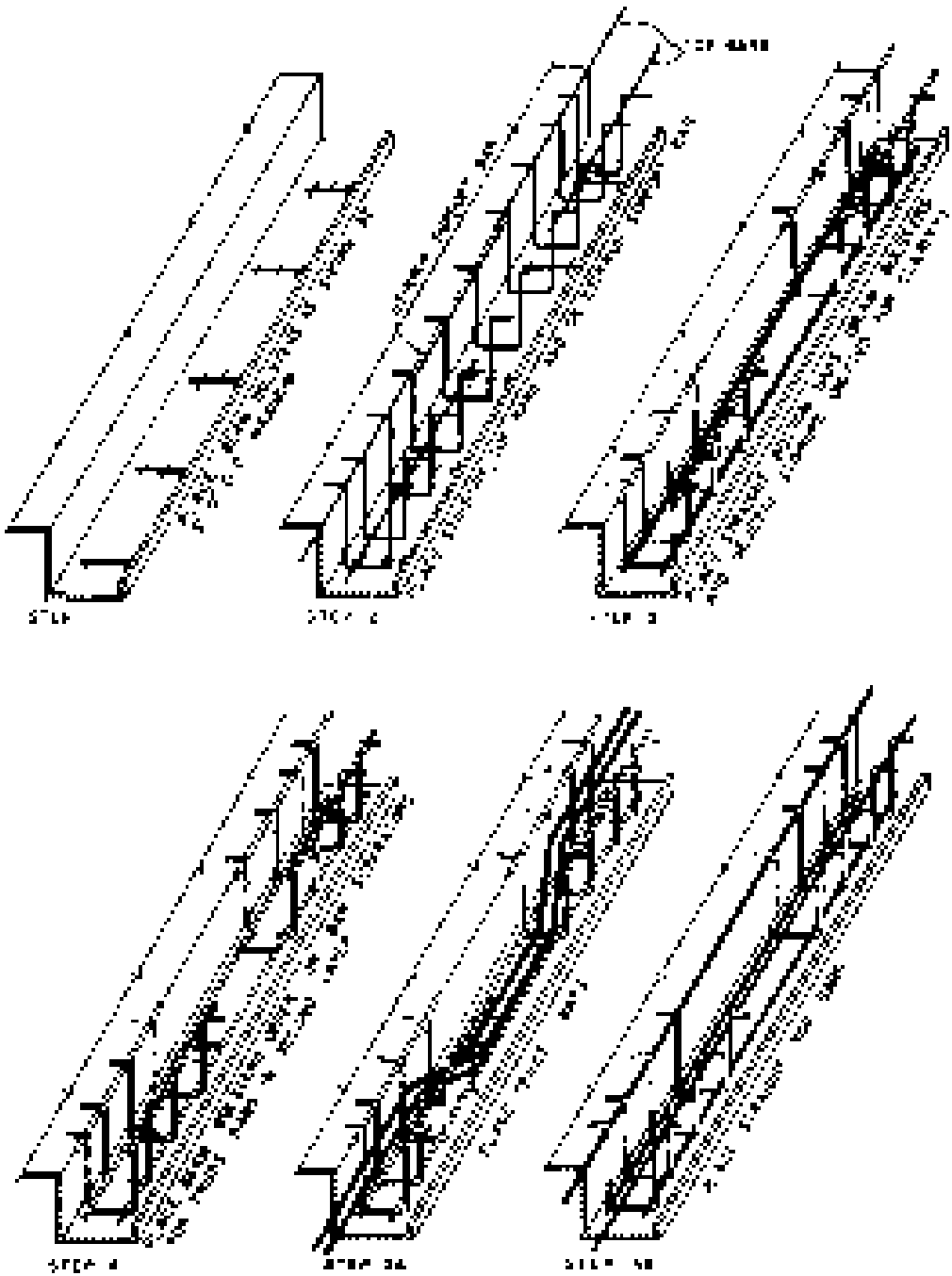

Figure 12–31 Placing reinforcing steel in a heavily congested area. (Courtesy of the Concrete Reinforcing Steel Institute.)

- Horizontal spacing of bars in slabs and walls 2 in. (25 mm).
- Stirrup spacing in flexural members [illegible] (12.5 mm).

The minimum clear distance between parallel bars in a layer should be the nominal diameter of the bar, but not less than 1 in. (25 mm) or 1.33 times the maximum aggregate size. For other than columns, the minimum clear distance between parallel bars should be the nominal diameter of the bar, but not less than 0.5 in. (12.5 mm) or 1.33 times the maximum aggregate size. Based on the above and other specified provisions, the given layout for the use of bar supports in Standard types and sizes of wire bar supports are illustrated in Figure 12–30. Figure 12–31 illustrates the CRSI-approved supports for placing reinforcing steel in a [illegible] concrete beam. [illegible] concrete [illegible] supports, [illegible] and [illegible].

12–5 QUALITY CONTROL

Common Deficiencies in Concrete Construction

Acceptable quality control and [illegible] inspections are necessary to achieve the specified strength, durability, and appearance to be obtained. Quality control measures specifically applicable to formwork are described in Section 12–3. Deficiencies in concrete construction practice may generally be traced to improper supervision of construction operations, [illegible] by the [illegible] Building Code of Engineering Inspection and Supervision. A list of typical deficiencies observed in concrete construction.

Structural Concrete

1. [illegible] form bracing, [illegible] joints, [illegible] by bumping, pounding, or improperly aligned members.
2. Poor placement of reinforcing steel, [illegible] concrete cover.
3. Honeycombed [illegible] walls.
4. Excessively [illegible] wall [illegible].
5. Unsatisfactory [illegible], [illegible], and patching.
6. Inadequate [illegible] [illegible] [illegible] design.

Concrete Slabs on Grade

1. Poor compaction of subgrade [illegible] by slab [illegible].
2. Formation and [illegible] to subgrade [illegible] by water [illegible] [illegible] under inadequate [illegible].
3. Uneven floor or [illegible].
4. [illegible] curing of [illegible].

Inspection and Testing

The inspection and testing associated with concrete quality control may be grouped into two phases. These include mix design, including material quality, batching, mixing, and transporting concrete, and quality control during placing, finishing, curing, and subsequent events in the field. Mix design includes the quantity of each component in the mix, the type and gradation of aggregates, the type of cement, and admixtures. Aggregate testing includes tests for organic impurities and excessive fines, gradation, moisture, absorption, and specific gravity. Control of concrete production includes accuracy of batching and mixing procedures and the consistency and properties of the product. Quality control procedures include verification that specifications have been met by all that is required in the way of proportioning, quality control, transporting, placing, finishing, and curing procedures should be checked for compliance with specifications and with the general purpose of the final product.

Testing procedures include tests on the properties and performance of plastic concrete and hardened concrete. The principal tests performed on plastic concrete include the slump test and temperature measurements. The consistency of plastic concrete could be checked for ease of placing, finishing, and consolidation. The strength of hardened concrete is determined by compressive tests on specimens or cores. Specimens are usually made at the site of pouring. Standards designed to recommend procedures for the [illegible] diameter by [illegible] in. long specimens from samples of fresh concrete are usually for [illegible] in. diameter by 30 in. (762 mm) long. A procedure for making compression test cores, which is recommended by the American Concrete Institute, is contained in ACI 318.

Recent developments in concrete testing technology have greatly reduced the time required for obtaining results from actual testing of plastic concrete. For example, a nuclear transducer is provided in a portable which measures the [illegible] of concrete, and some commercial products are available which measure the [illegible] within 5 min. When the relationships between measurements of [illegible] and 28-day compressive strength of a concrete mix have previously established, the [illegible] compressive strength of a concrete being placed can be quickly revealed from the [illegible] results [illegible] [illegible].

PROBLEMS

1. A steel reinforcing bar carrying the mark no. 16 X 20 60T. What are its size and strength in [illegible]?
2. What are the principal [illegible] that concrete [illegible] in the [illegible]?
3. What [illegible] [illegible] [illegible]

3. Briefly [illegible] the [illegible] in [illegible] precast [illegible] panel to start in place concrete.
4. When plastic [illegible] [illegible] [illegible]

13

Concrete Form Design

13–1 DESIGN PRINCIPLES

The design of concrete forms [illegible] chapter covering the design of structures and will be utilized [illegible] when the [illegible] problem in structural design. Unlike other [illegible] structures, this will usually involve the design of wall, column, or slab forms constructed of wood or plywood. In such cases, either the design loads [illegible] lateral loads of the primary form components [illegible] to determine the maximum bending and shear stresses in the maximum [illegible] that will occur. Vertical [illegible] and lateral bracing are then analyzed to [illegible] and repeatable solutions are presented in this chapter.

13–2 DESIGN LOADS

Wall and Column Forms

[illegible] vertical forces in wall and column forms, the design load consists of the lateral pressure of the [illegible] the [illegible] that the concrete exerts against a form. It was found to be a function of the unit weight of the concrete, [illegible] upon beam, temperature of the concrete, [illegible] and the height of the form. For [illegible] vibrated concrete, the American Concrete Institute (ACI) recommends the use of the following formulas [illegible] and [illegible]

For columns and walls with a vertical rate of placement less than 7 ft/hr (2.1 m/hr) and a placement height of 14 ft (4.3 m) or less:

$$p = C_w C_c \left(150 + \frac{9000R}{T}\right) \qquad (13\text{–}1)$$

$$\left[p = C_w C_c \left(150 + \frac{43R}{T - 8}\right)\right] \qquad (13\text{–}1M)$$

where: C_w = unit weight coefficient (Table 13–1)
C_v = chemical type coefficient (Table 13–2)
p = lateral pressure (psf or kPa)
R = rate of concrete placement (ft/h or m/h)
T = concrete temperature (°F or °C)
h = height of fresh concrete (ft or m)
γ = unit weight of concrete (lbs/cu ft or kN/m³)

Minimum pressure = $600\,C_w$ (lbs/sq ft) ($28.8\,C_w$ kPa)
Maximum pressure = γh

For walls with a vertical size of discontinuity of not less than 7 ft (2.1 m), and walls where rate of placement is less than 7 ft/h (2.1 m/h), where placement height exceeds 14 ft (4.3 m),

$$p = C_w C_v \left[150 + \frac{9{,}000\,R}{T} \quad \frac{43{,}400\,R}{T} \right] \qquad (13\text{–}24)$$

$$\left[p = C_w C_v \left(2.2 + \frac{0.784\,R}{T - 16.5} \quad \frac{24 + 0.8\,R}{T - 17.8} \right) \right] \qquad (13\text{–}24)$$

Minimum pressure = $600\,C_w$ (lbs/sq ft) ($28.8\,C_w$ kPa)
Maximum pressure = γh

Table 13–1 Correction unit weight coefficient C_w (American Concrete Institute)

Unit Weight of Concrete	C_w
Under 140 lbs/cu ft	$C_w = \left(\frac{w}{145}\right)$ but not less than 0.80
[illegible]	$C_w = 0.5\left(1 + \frac{w}{2{,}320}\right)$ but not less than 0.80
140 lb to 150 lbs/cu ft	1.0
2249 lb 2160 kg/m³	1.0
Over 150 lbs/cu ft	$C_w = \left(\frac{w}{145}\right)$
[illegible]	$C_w = \left(\frac{w}{2320}\right)$

Table 13-2 Concrete chemistry coefficient C_c (Courtesy of American Concrete Institute)

Cement Type or Blend	C_c
Type I, or III without retarder	1.0
Type I, or III with a retarder	1.2
Other blends containing less than 70% slag or 35% fly ash without retarders	1.2
Other blends containing less than 70% slag or 35% fly ash with a retarder	1.4
Blends containing more than 70% slag or 35% fly ash	1.4

For walls, it will seldom be necessary to exceed a pour height greater than 5 ft (1.5 m) in one lift before the concrete stiffens.

$$p = wh \qquad (13\text{–}6)$$

When concrete is placed vertically, it is commonly the design load. Lateral load is calculated by Equations 13–4 and 13–5 and be used. When concrete is placed from one side, vertical loads must be borne both column and wall forms. Equations 13–4 should be used. Concrete is placed in lifts and pressure of 25 psi (172 kPa) should be added to allow for impact pressure.

Floor and Roof Slab Forms

The weight load to be used for elevated slab construction is the weight of concrete and reinforcing steel. The weight of the forms, the weight of any live loads (equipment, workers, material, etc.), the normal rectangular construction, the design load for concrete and steel is based on a unit weight of 150 lb/ft³ (2400 kg/m³). The American Concrete Institute (ACI) recommends that a minimum live load of 50 lb/ft² (2.394 kPa) be used to cover the weight of equipment, workers, and materials. When mechanical vibrators are applied, a minimum live load of 100 lb/ft² (4.788 kPa) is provided in excess of the actual weight to these values. ACI recommends that a minimum certain total live load of 150 lb/ft² (7.182 kPa) be used. The total load should be increased in 25 lb/ft² (1.197 kPa) when critical stages are reached. (Note: 1 lb/ft² = 0.0479 kPa)

Lateral Loads

Forms must be designed to resist lateral loads such as those imposed by wind, or movement of equipment in the forms, and the stacking of materials in the forms. Since forces are usually resisted by lateral bracing, refer to Section 13–5. The minimum lateral design loads recommended for wall forms are given in Table 13–3. When temporary bracing must be designed to resist the lateral forces and to transmit loads.

Table 13–3 Recommended minimum lateral design load for wall forms

Wall Height, h (ft) [m]	Design Lateral Force Applied at Top of Form (psf) [kN/m]
[illegible]	[illegible]
[illegible]	[illegible]
[illegible]	7.5 h [0.359 h] but [illegible]

[illegible]

The design lateral pressure, p, is expressed as follows:

$$p = C_w C_h \gamma h \quad \text{(13–4)}$$

where p = [illegible] lateral pressure [psf] [kN/m²]; minimum value = 300 lb/ft² [4.46 kN/m²]
h = depth of fresh concrete [ft] [m]
w = width of slab per square foot of form surface [ft²]

In using Eq. [illegible], the unit weight of fresh concrete should be taken as the actual weight of the concrete only that portion of the slab resting on the form.

13–3 METHOD OF ANALYSIS

Basis of Analysis

[illegible] design loads are [illegible] selected, the sheathing, joists or studs, and stringers are [illegible] considering [illegible] the loaded beam or portion of beam [illegible] single span, two span, or three span or longer and subjected to bending, shear, and deflection. Vertical supports and overall shoring must be [illegible] for concentrated [illegible] for sheathing, bearing stresses must be checked [illegible] for shear and compression.

Design [illegible] in accordance with the [illegible] specified in the [illegible] of bending, compression, shear, and deflection developed for a [illegible] horizontal, single span, beam of uniform cross section as shown in Table 13–[illegible].

Table 13–4 Maximum bending moment, shear, and deflection in a uniformly loaded beam

Type	Support Conditions		
	1 Span	2 Spans	3 Spans
Bending moment (in. lb)	$M = \frac{wL^2}{8}$	$M = \frac{wL^2}{9.6}$	$M = \frac{wL^2}{10.3}$
Shear (lb)	$V = \frac{wL}{2.4}$	$V = \frac{5wL}{8.0}$	$V = \frac{wL}{2.1}$
Deflection (in.)	$\Delta = \frac{5wL^4}{384EI}$	$\Delta = \frac{wL^4}{185EI}$	$\Delta = \frac{wL^4}{174.6EI}$

Notes:
L = length of span (in.)
w = load per unit length (lb/in.)
E = modulus of elasticity (psi)
I = moment of inertia (in.^{4})

The maximum flexural stresses caused by combinations of bending, shear, and compression resulting from specified loads are to be determined from the following equations.

Bending

$$f_b = \frac{M}{S} \tag{13–5}$$

Shear

$$f_v = \frac{3V}{A} \text{ for rectangular cross-sectional members} \tag{13–6}$$

$$f_v = \frac{V}{0.67Q} \text{ for plywood} \tag{13–7}$$

Compression

$$f_{cx} \text{ or } f_{cy} = \frac{P}{A} \tag{13–8}$$

Tension

$$f_t = \frac{P}{A} \tag{13–9}$$

where f_b = constant-moment bending stress (psi)
f_v = nominal unit shear stress in compression parallel to grain (psi)
f_v = nominal unit shear stress in compression perpendicular to grain (psi)
f_t = nominal unit stress in tension (psi)

f_v = [illegible]

A = [illegible]

M = [illegible]

f'_c = [illegible]

E = [illegible]

v = [illegible]

[illegible]

[illegible] of a piece of [illegible] parallel to its length [illegible] compressive [illegible] the grain. Thus, a compressive force [illegible] Figure 13-[illegible] will result in [illegible] uniform stress [illegible] in the member. [illegible] Figure 13-[illegible] will result in [illegible] stress [illegible] to the grain. [illegible] bending [illegible] stress [illegible] maximum [illegible] stress developed in a beam by [illegible] uniform loaded [illegible] per [illegible] foot [illegible] and [illegible] Tables [illegible] and 13-3A.

While design load and [illegible] properties have been specified, [illegible] may be [illegible] for the maximum allowable span [illegible] design load and span length. [illegible] may be [illegible] to the [illegible] of the member. Design [illegible] for Douglas-fir plywood [illegible] are given in Table 13-[illegible] and section properties for [illegible] are given in Table 13-3. The properties of plywood [illegible] are included in Section [illegible]. However, [illegible] are given in Table 13-[illegible]. The allowable [illegible] values in Table 13-[illegible] are not [illegible] by [illegible] load duration factor of 1.25 (7-day load) when designing [illegible] and [illegible] very [illegible]. However, allowable stresses for [illegible] and Plywood may be [illegible] by the factors given in Table 13-[illegible] for [illegible] values. The values [illegible] presented in Table 13-5 are based on [illegible] 7-day load duration [illegible] and [illegible] values [illegible].

It should be noted that [illegible] plywood sheathing is [illegible] combined [illegible] deflection and shear deflection. While the deflection [illegible] Tables 13-[illegible] and 13-3A consider only bending deflection, the modulus of elasticity values in Table 13-[illegible] [illegible] for shear deflection. Thus, [illegible] is [illegible] in most cases. However, for very short spans [illegible] than 13 ft, it is recommended that shear deflection be considered [illegible] and added to bending deflection. See reference [illegible] for more [illegible].

13-4 SLAB FORM DESIGN

Method of Analysis

The [illegible] sheathing [illegible] in Tables 13-[illegible] and 13-3A in the design of a [illegible] is [illegible] the [illegible] of the specified [illegible] and [illegible] yield [illegible] Figure 13-[illegible]. Determine [illegible] the maximum allowable span based on the

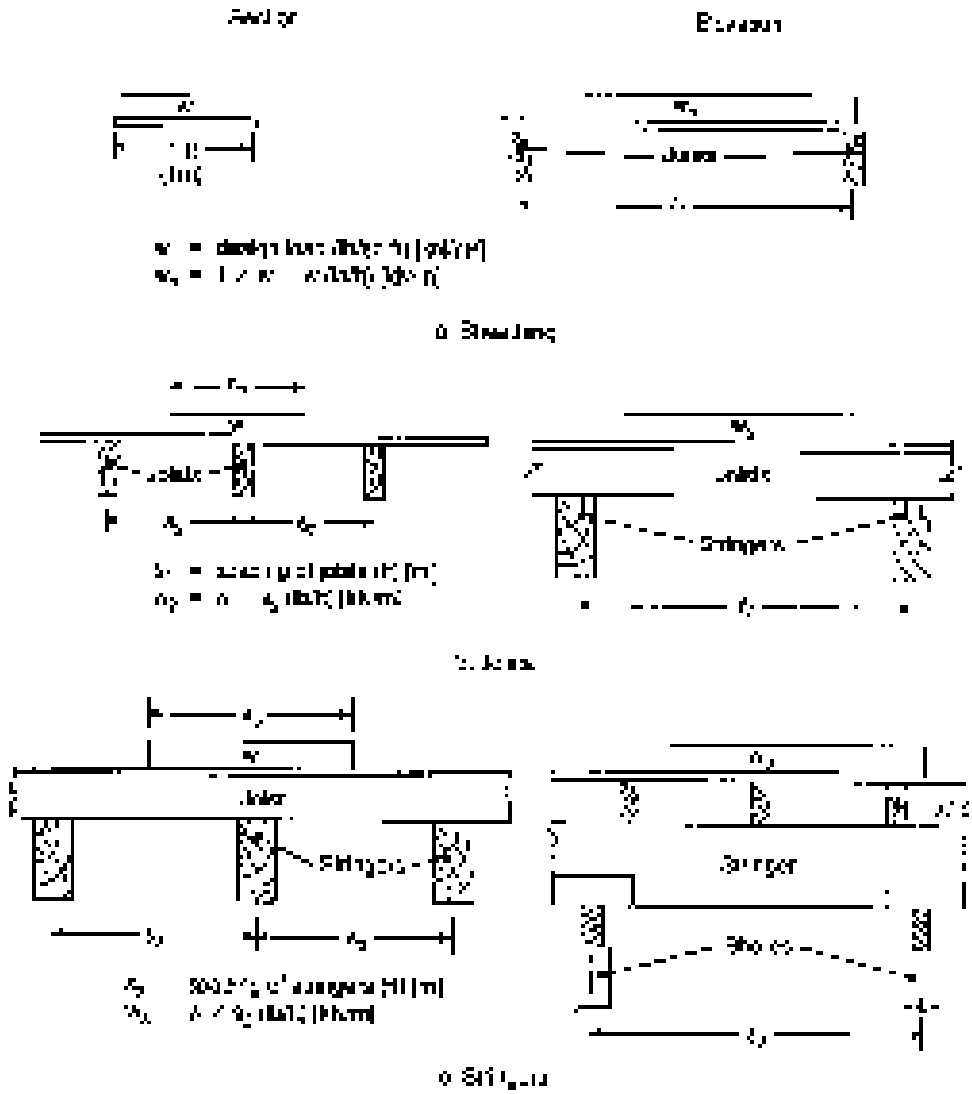

Figure 13–8 Design analysis of floor members.

allowable stresses to satisfy strength, deflection, and deflection. The lowest theoretical cost for a structural design, in the form of minimum spacing of the supporting joists or girders, satisfying all conditions of design, the maximum spacing is usually limited due to the lowest bracing energy or maximum or the most economical joist spacing.

Joist and girder spacing. The initial step is to proceed to determine the maximum allowable spacing for each support. The load conditions for the joists are illustrated in Figure 13–8. The joist spacing selected will be the spacing of the girders. Again, an integer or modular value is selected for joist spacing.

Table 13-5 Formulas for design conditions

Design Condition	Support Conditions		
	1 Span	2 Spans	3 or More Spans
Bending			
Wood	[illegible]	[illegible]	[illegible]
	[illegible]	[illegible]	[illegible]
Plywood	[illegible]	[illegible]	[illegible]
Shear			
Wood	[illegible]	[illegible]	[illegible]
Plywood	[illegible]	[illegible]	[illegible]
Deflection	[illegible]	[illegible]	[illegible]
[illegible]	[illegible]	[illegible]	[illegible]
[illegible]	[illegible]	[illegible]	[illegible]
[illegible]	[illegible]	[illegible]	[illegible]
Compression	[illegible]		
Tension	[illegible]		

Nomenclature

[illegible]

The [illegible] computer program [illegible]

Table 13–54. Wood or plywood concrete form design equations

Design Conditions	Support Conditions		
	1 Span	2 Spans	3 or More Spans
Bending			
Wood	[illegible]	[illegible]	[illegible]
	[illegible]	[illegible]	[illegible]
Plywood	[illegible]	[illegible]	[illegible]
Shear			
Wood	[illegible]	[illegible]	[illegible]
Plywood	[illegible]	[illegible]	[illegible]
Deflection	[illegible]	[illegible]	[illegible]
[illegible]	[illegible]	[illegible]	[illegible]
[illegible]	[illegible]	[illegible]	[illegible]
[illegible]	[illegible]	[illegible]	[illegible]
Compression	[illegible]		
Bearing	[illegible]		

Notations:

[illegible] = [illegible] (mm)
[illegible] = [illegible] (kN)
[illegible] = [illegible] (kN)
[illegible] = [illegible] (kN

Table 13-6 Section properties of plywood, [illegible] rated by author with data from APA—the Engineered Wood Association

Thickness in. (mm)	Approx. Weight psf (kg/m²)	Face Grain Across Supports: EI 10^6 lbf·in.² (N·m²)	Face Grain Across Supports: F_bKS 10^3 lbf·in. (N·m)	Face Grain Across Supports: F_vIb/Q 10^3 lbf (N)	Face Grain Parallel to Supports: EI 10^6 lbf·in.² (N·m²)	Face Grain Parallel to Supports: F_bKS 10^3 lbf·in. (N·m)	Face Grain Parallel to Supports: F_vIb/Q 10^3 lbf (N)
Plyform Class I							
[illegible]	[illegible]	[illegible]	[illegible]	[illegible]	[illegible]	[illegible]	[illegible]
		[illegible]	[illegible]	[illegible]	[illegible]	[illegible]	[illegible]
[illegible]	[illegible]	[illegible]	[illegible]	[illegible]	[illegible]	[illegible]	[illegible]
		[illegible]	[illegible]	[illegible]	[illegible]	[illegible]	[illegible]
[illegible]	[illegible]	[illegible]	[illegible]	[illegible]	[illegible]	[illegible]	[illegible]
		[illegible]	[illegible]	[illegible]	[illegible]	[illegible]	[illegible]
[illegible]	[illegible]	[illegible]	[illegible]	[illegible]	[illegible]	[illegible]	[illegible]
		[illegible]	[illegible]	[illegible]	[illegible]	[illegible]	[illegible]
[illegible]	[illegible]	[illegible]	[illegible]	[illegible]	[illegible]	[illegible]	[illegible]
		[illegible]	[illegible]	[illegible]	[illegible]	[illegible]	[illegible]
Plyform Class II							
[illegible]	[illegible]	[illegible]	[illegible]	[illegible]	[illegible]	[illegible]	[illegible]
		[illegible]	[illegible]	[illegible]	[illegible]	[illegible]	[illegible]
[illegible]	[illegible]	[illegible]	[illegible]	[illegible]	[illegible]	[illegible]	[illegible]
		[illegible]	[illegible]	[illegible]	[illegible]	[illegible]	[illegible]
[illegible]	[illegible]	[illegible]	[illegible]	[illegible]	[illegible]	[illegible]	[illegible]
		[illegible]	[illegible]	[illegible]	[illegible]	[illegible]	[illegible]
[illegible]	[illegible]	[illegible]	[illegible]	[illegible]	[illegible]	[illegible]	[illegible]
		[illegible]	[illegible]	[illegible]	[illegible]	[illegible]	[illegible]
[illegible]	[illegible]	[illegible]	[illegible]	[illegible]	[illegible]	[illegible]	[illegible]
		[illegible]	[illegible]	[illegible]	[illegible]	[illegible]	[illegible]

Table [illegible] (Continued)

Plytem Secucunall							
[illegible]	[illegible]	[illegible]	0.369	[illegible]	[illegible]	0.844	[illegible]
		[illegible]	[illegible]	[illegible]	[illegible]	[illegible]	[illegible]
[illegible]	[illegible]	0.150	0.637	[illegible]	[illegible]	[illegible]	[illegible]
		[illegible]	[illegible]	[illegible]	[illegible]	[illegible]	[illegible]
[illegible]	[illegible]	[illegible]	[illegible]	[illegible]	[illegible]	[illegible]	[illegible]
		[illegible]	[illegible]	[illegible]	[illegible]	[illegible]	[illegible]
[illegible]	[illegible]	[illegible]	[illegible]	[illegible]	[illegible]	[illegible]	[illegible]
		[illegible]	[illegible]	[illegible]	[illegible]	[illegible]	[illegible]
[illegible]	[illegible]	[illegible]	389	[illegible]	[illegible]	[illegible]	[illegible]
		[illegible]	[illegible]	[illegible]	[illegible]	[illegible]	[illegible]
[illegible]	[illegible]	0.601	.843	0.302	[illegible]	[illegible]	[illegible]
		[illegible]	[illegible]	[illegible]	[illegible]	[illegible]	[illegible]

[illegible]

Table 13-7 Section properties of U.S. standard lumber and timber sections (metric units, $d \times b$ in mm)

Nominal Size (in × in)	Actual Size (in)		Area of Section A		Section Modulus S		Moment of Inertia I	
$d \times b$	d	b	mm^2	$10^3\ mm^3$	mm^3	$10^3\ mm^3$	mm^4	$10^6\ mm^4$
1 × 2	0.75 × 1.5	19 × 38	684	4.910	2.710	0.1250	[illegible]	[illegible]
1 × 4	0.75 × 3.5	19 × 89	1 661	4.66	5[illegible]1	0.2[illegible]	[illegible]	[illegible]
1 × 6	0.75 × 5.5	19 × 140	2 627	5.664	2 [illegible]1	0.2[illegible]	[illegible]	[illegible]
1 × 8	0.75 × 7.25	19 × 184	3 [illegible]	5.000	2 [illegible]	[illegible]	[illegible]	[illegible]
1 × 10	0.75 × 9.25	19 × 235	4 [illegible]	[illegible]	12 [illegible]	[illegible]	[illegible]	[illegible]
1 × 12	0.75 × 11.25	19 × 286	5 [illegible]	[illegible]	12[illegible]	[illegible]	[illegible]	[illegible]
2 × 2	1.5 × 1.5	38 × 38	1 [illegible]	[illegible]	[illegible]	[illegible]	[illegible]	[illegible]
2 × 4	1.5 × 3.5	38 × 89	3 [illegible]	[illegible]	[illegible]	[illegible]	[illegible]	[illegible]
2 × 6	1.5 × 5.5	38 × 140	5 [illegible]	[illegible]	[illegible]	[illegible]	[illegible]	[illegible]
2 × 8	1.5 × 7.25	38 × 184	6.88	[illegible]	[illegible]	2.122	[illegible]	[illegible]
2 × 10	1.5 × 9.25	38 × 235	8.88	[illegible]	[illegible]	[illegible]	[illegible]	[illegible]
2 × 12	1.5 × 11.25	38 × 286	10.88	[illegible]	[illegible]	[illegible]	[illegible]	[illegible]
2 × 14	1.5 × 13.25	38 × 337	12.88	[illegible]	[illegible]	[illegible]	[illegible]	[illegible]
3 × 2	2.5 × 1.5	64 × 38	6.50	[illegible]	[illegible]	[illegible]	[illegible]	[illegible]
3 × 4	2.5 × 3.5	64 × 89	15.75	[illegible]	[illegible]	[illegible]	[illegible]	[illegible]
3 × 6	2.5 × 5.5	64 × 140	15.12	11.9	[illegible]	[illegible]	[illegible]	[illegible]
3 × 8	2.5 × 7.25	64 × 184	15.12	[illegible]	[illegible]	[illegible]	[illegible]	[illegible]
3 × 10	2.5 × 9.25	64 × 235	15.12	[illegible]	[illegible]	[illegible]	[illegible]	[illegible]
3 × 12	2.5 × 11.25	64 × 286	15.12	[illegible]	[illegible]	[illegible]	[illegible]	[illegible]
3 × 14	2.5 × 13.25	64 × 337	15.12	[illegible]	[illegible]	[illegible]	[illegible]	[illegible]
3 × 16	2.5 × 15.25	64 × 387	15.12	[illegible]	[illegible]	[illegible]	[illegible]	[illegible]
4 × 2	3.5 × 1.5	89 × 38	12.25	[illegible]	[illegible]	[illegible]	[illegible]	[illegible]
4 × 4	3.5 × 3.5	89 × 89	12.25	[illegible]	[illegible]	[illegible]	[illegible]	[illegible]
4 × 6	3.5 × 5.5	89 × 140	19.25	[illegible]	[illegible]	[illegible]	[illegible]	[illegible]
4 × 8	3.5 × 7.25	89 × 184	25.38	[illegible]	[illegible]	[illegible]	[illegible]	[illegible]
4 × 10	3.5 × 9.25	89 × 235	32.38	[illegible]	[illegible]	[illegible]	[illegible]	[illegible]
4 × 12	3.5 × 11.25	89 × 286	39.38	[illegible]	[illegible]	[illegible]	[illegible]	[illegible]
4 × 14	3.5 × 13.25	89 × 337	46.38	[illegible]	[illegible]	[illegible]	[illegible]	[illegible]
4 × 16	3.5 × 15.25	89 × 387	53.38	[illegible]	[illegible]	[illegible]	[illegible]	[illegible]
6 × 6	5.5 × 5.5	140 × 140	30.25	[illegible]	[illegible]	[illegible]	[illegible]	[illegible]
6 × 8	5.5 × 7.5	140 × 191	41.25	[illegible]	[illegible]	[illegible]	[illegible]	[illegible]
6 × 10	5.5 × 9.5	140 × 241	52.25	[illegible]	[illegible]	[illegible]	[illegible]	[illegible]
6 × 12	5.5 × 11.5	140 × 292	63.25	[illegible]	[illegible]	[illegible]	[illegible]	[illegible]
6 × 14	5.5 × 13.5	140 × 343	74.25	[illegible]	[illegible]	[illegible]	[illegible]	[illegible]
6 × 16	5.5 × 15.5	140 × 394	85.25	[illegible]	[illegible]	[illegible]	[illegible]	[illegible]

Based on the selected design specification, the product is acceptable if it is equal to or less than the maximum allowable span. Notice that the span values are given in feet and inches. Because the units of allowable span are feet, the load must be converted to kips/ft. Assuming a uniformly distributed load, the bending moment is calculated as $M = wL^2/8$. However, it is simpler and more accurate to use the tabulated values of allowable span. Moreover, it is simpler and more accurate to use the load on the stringer as a uniform load. The vertical load on the floor joist equal to the number 2 equal to the stringer spacing is shown in Figure 13-11. The stringer and stringer spacing must meet the chemical specification. The capacity of the stringer must be

Table [illegible]-7 (Continued)

Nominal Size (Inch)	Actual Size (SI)			Area of Section A		Section Modulus A		Moment of Inertia I	
8 × 16	[illegible]	[illegible]	[illegible]	[illegible]	[illegible]	[illegible]	[illegible]	[illegible]	[illegible]
8 × 18	[illegible]	[illegible]	[illegible]	[illegible]	[illegible]	[illegible]	[illegible]	[illegible]	[illegible]
8 × 20	[illegible]	[illegible]	[illegible]	[illegible]	[illegible]	[illegible]	[illegible]	[illegible]	[illegible]
8 × 24	[illegible]	[illegible]	[illegible]	[illegible]	[illegible]	[illegible]	[illegible]	[illegible]	[illegible]
10 × 4	[illegible]	[illegible]	[illegible]	[illegible]	[illegible]	[illegible]	[illegible]	[illegible]	[illegible]
10 × 6	[illegible]	[illegible]	[illegible]	[illegible]	[illegible]	[illegible]	[illegible]	[illegible]	[illegible]
10 × 8	[illegible]	[illegible]	[illegible]	[illegible]	[illegible]	[illegible]	[illegible]	[illegible]	[illegible]
10 × 10	[illegible]	[illegible]	[illegible]	[illegible]	[illegible]	[illegible]	[illegible]	[illegible]	[illegible]
10 × 12	[illegible]	[illegible]	[illegible]	[illegible]	[illegible]	[illegible]	[illegible]	[illegible]	[illegible]
10 × 14	[illegible]	[illegible]	[illegible]	[illegible]	[illegible]	[illegible]	[illegible]	[illegible]	[illegible]
10 × 16	[illegible]	[illegible]	[illegible]	[illegible]	[illegible]	[illegible]	[illegible]	[illegible]	[illegible]
10 × 18	[illegible]	[illegible]	[illegible]	[illegible]	[illegible]	[illegible]	[illegible]	[illegible]	[illegible]
10 × 20	[illegible]	[illegible]	[illegible]	[illegible]	[illegible]	[illegible]	[illegible]	[illegible]	[illegible]
10 × 22	[illegible]	[illegible]	[illegible]	[illegible]	[illegible]	[illegible]	[illegible]	[illegible]	[illegible]
10 × 24	[illegible]	[illegible]	[illegible]	[illegible]	[illegible]	[illegible]	[illegible]	[illegible]	[illegible]
12 × 10	[illegible]	[illegible]	[illegible]	[illegible]	[illegible]	[illegible]	[illegible]	[illegible]	[illegible]
12 × 14	[illegible]	[illegible]	[illegible]	[illegible]	[illegible]	[illegible]	[illegible]	[illegible]	[illegible]
12 × 16	[illegible]	[illegible]	[illegible]	[illegible]	[illegible]	[illegible]	[illegible]	[illegible]	[illegible]
12 × 18	[illegible]	[illegible]	[illegible]	[illegible]	[illegible]	[illegible]	[illegible]	[illegible]	[illegible]
12 × 20	[illegible]	[illegible]	[illegible]	[illegible]	[illegible]	[illegible]	[illegible]	[illegible]	[illegible]
12 × 22	[illegible]	[illegible]	[illegible]	[illegible]	[illegible]	[illegible]	[illegible]	[illegible]	[illegible]
12 × 24	[illegible]	[illegible]	[illegible]	[illegible]	[illegible]	[illegible]	[illegible]	[illegible]	[illegible]
14 × 14	[illegible]	[illegible]	[illegible]	[illegible]	[illegible]	[illegible]	[illegible]	[illegible]	[illegible]
14 × 16	[illegible]	[illegible]	[illegible]	[illegible]	[illegible]	[illegible]	[illegible]	[illegible]	[illegible]
14 × 18	[illegible]	[illegible]	[illegible]	[illegible]	[illegible]	[illegible]	[illegible]	[illegible]	[illegible]
14 × 20	[illegible]	[illegible]	[illegible]	[illegible]	[illegible]	[illegible]	[illegible]	[illegible]	[illegible]
14 × 22	[illegible]	[illegible]	[illegible]	[illegible]	[illegible]	[illegible]	[illegible]	[illegible]	[illegible]
14 × 24	[illegible]	[illegible]	[illegible]	[illegible]	[illegible]	[illegible]	[illegible]	[illegible]	[illegible]

[illegible]

Table 15-8 Typical values of allowable stress for lumber

Species (No. 2 Grade, 4 × 4 [100 × 100 mm] or smaller)	Allowable Unit Stress (psi) [kPa] (Moisture Content – 19%)					
	F_b	F_v	$F_{c\perp}$	F_c	F_t	E
Douglas fir—larch	[illegible]	[illegible]	307	[illegible]	[illegible]	1.7×10^6
	[illegible]	[1379]	[illegible]	[illegible]	[illegible]	[11.7×10^6]
Douglas fir	[illegible]	[illegible]	[illegible]	800	675	1.4×10^6
	[illegible]	[1034]	[1655]	[illegible]	[illegible]	[9.7×10^6]
Southern pine	[illegible]	[illegible]	405	[illegible]	[illegible]	1.6×10^6
	[illegible]	[1711]	[2793]	[illegible]	[illegible]	[11.0×10^6]
Ponderosa pine	[illegible]	[illegible]	425	[illegible]	675	[illegible] $\times 10^6$
	[illegible]	[illegible]	[2930]	[illegible]	[illegible]	[illegible] $\times 10^6$
Eastern hemlock	[illegible]	[illegible]	[illegible]	[illegible]	625	1.2×10^6
	[illegible]	[illegible]	[illegible]	[illegible]	[illegible]	[illegible] $\times 10^6$
Reduction factor for wet service	0.58	0.67	0.67	[illegible]	0.54	0.97
Load duration factor (relative to normal load)	.75	1.25	1.25	.25	.15	1.00

unit stress in compression perpendicular to the grain. A similar procedure is applied to the prime value, which is larger because it is not subject to creep.

For members bending, the maximum allowable bending moment is a function of the unsupported length and least dimension of the member. The W dimension may be used with the smaller dimension. For W ratios less than 50, the following equation applies:

$$F_b' = \frac{C_D F_b}{0.5W^2} \le F_b \qquad (13\text{–}16)$$

where F_b' = allowable unit stress in compression parallel to the grain (lb/sq in [kPa])
F_b = allowable unit stress in compression parallel to the grain, adjusted for duration (psi [kPa])
C_D = duration of load factor (lb/sq in [kPa])
W = nominal least dimension of rectangular cross section

In using this equation, care must be taken to calculate the value of W in the proper units.

These design procedures are summarized in the following example. Shear and design of a typical pyramid roof structure is illustrated in Example 13-3.

EXAMPLE 13–1

Design a [illegible] for an elevated concrete floor [illegible] Strengthening will be vertical [illegible] (21 mm) [illegible] will be used for [illegible] Stirrups will be [illegible] (100 × 200 mm) [illegible] will be used. It is estimated that the weight of the stirrups will be [illegible] The adjusted clear [illegible] be as follows:

	Strengthening psi (kPa)	Other Members psi (kPa)
[illegible]	[illegible]	[illegible]
[illegible]	[illegible]	[illegible]
[illegible]		[illegible]
[illegible]		[illegible]
[illegible]	[illegible]	[illegible]
[illegible]	[illegible]	[illegible]

Maximum deflection of [illegible] will be [illegible] $\frac{L}{360}$. [illegible] live load [illegible] by ACI [illegible] spacing [illegible] spacing.

SOLUTION

Design Load

[illegible]

[illegible]

Dead load = [illegible] lb/sq ft × [illegible] ft = [illegible] lb/sq ft

Live load = [illegible] lb/sq ft

Design load = [illegible] lb/sq ft

Pressure psi [illegible]

Concrete = [illegible] × [illegible] × 0.152 × 2400 × [illegible] = [illegible]

[illegible]

Total load = [illegible]

Design load = [illegible]

Bed. Design

Consider an uniformly loaded simply supported [illegible] Assume [illegible] and [illegible] = [illegible]

[illegible] = [illegible] lb/sq ft × [illegible] = [illegible] lb

[illegible] = [illegible] × [illegible] = [illegible]

Figure 13–2 Slab form
example 13–1.

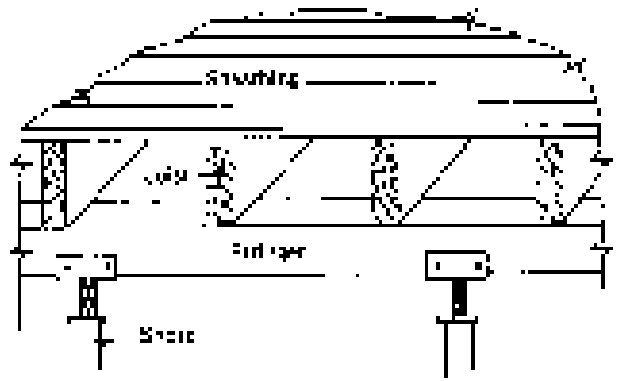

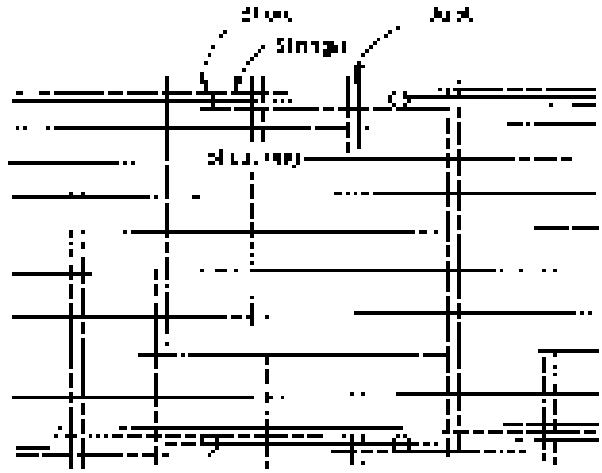

(c) Bending

$$= 4.16\,\text{in}\left(\frac{\quad}{\quad}\right)^{1/3}$$

$$= 4.16(0.25)\left(\frac{(1075)(12)}{\quad}\right)^{1/3} = 3.5\ \text{in.}$$

$$= \frac{M}{f_b}\left(\frac{6}{b}\right)^{1/2}$$

$$= \frac{(3.5)^2\,(1000)(774)(12)(1000)}{3000}\left(\frac{6}{\quad}\right)^{1/2} = 344\ \text{in}^3$$

(c) Shear

$$V = \frac{F_y A}{n} + \Delta n$$

$$= \frac{(250)(15)(12)(0.35)}{250} + (2)(0.75) = 18.15 \text{ in.}$$

$$\left[s = \frac{1.1 F_y A}{V - \Delta n} \quad \text{or} \quad s = \frac{(1.1)(250)(0.35)(30)}{1.00(0.22)} = 1.02 \text{ in} \right]$$

(d) Deflection

$$s = 1.20\left(\frac{60}{f_y}\right)^{0.4} = 1.20\left(\frac{250}{60}\right)^{0.4}$$

$$= 2.60\left(\frac{(1.26 \times 10^{-6})(13)(0.75)^{0.5}}{(1.50)(12)}\right) = 20.3 \text{ in.}$$

$$s = \frac{1.10 F_y L^2}{1000 \Delta} = \frac{(1.10)(250)(30)^2}{(1000)(0.75)}$$

$$= \frac{(1.10)(250)(30)^2}{1000\left(\frac{(1.26 \times 10^{-6})(13)(0.75)^{0.5}}{(1.50)(12)}\right)} = 20.3 \text{ in.}$$

The limiting spacing in this case is the maximum allowable spacing, 20.3 in. (Choosing 19 in. results in 24 stirrups plus spacing at a normal variation in the design.)

Joist Design

Consider the joist system in the floor beam supporting a slab of design load 150 psf, 300 psf live load, and spacing of joists as shown in Figure 13-10. Joists are 10 ft × 20 ft × 200 mm thick. Assume that the joists are continuous over three spans.

$$w = (150 + 300)(10)(20)(0.200)(0.10) = 270 \text{ lb/ft}$$

$$w_u = 1.6(300)(10) + 1.4(270) = 5700 \text{ lb/ft}$$

(a) Bending

$$d = 0.03\left(\frac{F_y S}{f_c'}\right)^{0.5}$$

$$= 0.03\left(\frac{(250)(1.5 \times 14)}{3000}\right)^{0.5} = 8.5 \text{ in}$$

$$d = \frac{w_u}{1000}\left(\frac{L}{f_c'}\right)^{0.5}$$

$$= \frac{5700}{1000}\left(\frac{(0.9)(12)(3 \times 10^{-6})}{3000}\right)^{0.5} = 8.2 \text{ in.}$$

(a) Shear:

$$\tau = \frac{3V}{2A} = \frac{3(13.50\ \text{kN})}{2(0.0\ \text{m})(0.05\ \text{m})} = 11.1\ \text{MPa}$$

$$\tau = \frac{VQ}{Ib} = \frac{V\left(\frac{1}{2}h\right)\left(\frac{h}{4}\right)}{\left(\frac{1}{12}bh^3\right)b} = \frac{3V}{2bh}$$

$$= \frac{3(13.50\ \text{kN})}{2(0.0\ \text{m})(0.05\ \text{m})} = 11.1\ \text{MPa}$$

(b) Deflection:

$$\Delta = \frac{5wL^4}{384EI} = \frac{5(1.5\ \text{kN/m})(1.24\ \text{m})^4}{384(70\ \text{GPa})(0.0\ \text{m})(0.05\ \text{m})^3} = 2.18\ \text{mm}$$

(c) Deflection:

$$\Delta = \frac{PL^3}{3EI} = \frac{P\left(\frac{L}{2}\right)^3}{3\left(\frac{1}{12}bh^3\right)E}$$

$$\Delta = \frac{(13.50\ \text{kN})(1.24\ \text{m})^3}{(70\ \text{GPa})(0.0\ \text{m})(0.05\ \text{m})^3} = 1.07\ \text{mm}$$

$$\tau = \frac{3V}{2bh} = \frac{3(13.50\ \text{kN})}{2(0.0\ \text{m})(0.05\ \text{m})} = 11.1\ \text{MPa}$$

$$\Delta = \frac{3L^3}{2Ebh^3}\left[\frac{P}{2} + \frac{w}{4}\left(\frac{L}{2}\right)\right] = \frac{3(1.24\ \text{m})^3}{2(70\ \text{GPa})(0.0\ \text{m})(0.05\ \text{m})^3}\left[\frac{13.50\ \text{kN}}{2} + \frac{(1.5\ \text{kN/m})(1.24\ \text{m})}{4}\right] = 2.32\ \text{mm}$$

This loading produces and the maximum unit space is 57 m, 2.18 mm. We can select a stringer spacing just space of 24 m, 2.32 mm.

Stringer Design

To analyze stringer design, consider a strip of design load 7.5 m (2.5 m wide) (up to 1 m per spacing) to ensure directly on the stringer (Figure 15–1c). Assume the stringer to be continuous over three spans. Subjected a 4 × 8 (100 × 200 mm) timber. Neglect the flange, input as a beam and determine the maximum allowable load.

$$w = (7.5\ \text{m})(100\ \text{kN/m}) = 750\ \text{kN/m}$$

$$[w = (2.5\ \text{m})(100\ \text{kN/m}) = 250\ \text{kN/m}]$$

(a) Bending:

$$\sigma = \frac{M}{S} = \frac{\frac{wL^2}{10}}{\frac{1}{6}bh^2}$$

$$= 13.95\ \text{MPa} = \frac{\frac{(750\ \text{kN/m})(1.5\ \text{m})^2}{10}}{\frac{1}{6}(0.100\ \text{m})(0.200\ \text{m})^2} = 11.1\ \text{MPa}$$

$$\tau = \frac{3V}{2bh} = \frac{3\left(\frac{wL}{2}\right)}{2bh}$$

$$= \frac{3}{2(0.100\ \text{m})(0.200\ \text{m})}\left[\frac{(750\ \text{kN/m})(1.5\ \text{m})}{2} + \frac{(250\ \text{kN/m})(1.5\ \text{m})}{2}\right] = 0.98\ \text{MPa}$$

(c) Shear:

$$I = \frac{[illegible]}{[illegible]} \quad [illegible]$$

$$= \frac{[illegible](1.3)(1.85)(125.56)}{[illegible]} \quad (A)(0.[illegible]) = [illegible]$$

$$= \frac{[illegible]}{[illegible]} \quad [illegible]$$

$$= \frac{[illegible](1.241)(0.37 \times 10^{6})}{[illegible]} \quad [illegible] = 2[illegible] \text{ mm}$$

(d) Deflection:

$$= 1.20\left(\frac{[illegible]}{[illegible]}\right)^{[illegible]}$$

$$1.00\left(\frac{[illegible] \times 10^{6}(1.1)^{[illegible]}}{[illegible]}\right)^{[illegible]} = [illegible] \text{ cm}$$

$$= \frac{[illegible]}{[illegible]}$$

$$= \frac{[illegible](0.7 \times 10^{6})(46.5^{3} \times 10^{6})^{[illegible]}}{[illegible]} \quad 2[illegible] \text{ mm}$$

Bending moment and the [illegible] moment are [illegible] (illegible) mm.

Now we know that [illegible] stiffeners [illegible] spacing of stiffeners. The maximum allowable spacing of the stiffeners is equal to the shear strength divided by the load per unit length of stringer.

$$= \frac{[illegible]}{[illegible]} \times 10 = [illegible]$$

$$\left[= \frac{17.5}{13.25} = 1.[illegible] \text{ m} \right]$$

Thus the maximum allowable spacing is limited by shear strength to 2.[illegible] m. We select a stiffener spacing of 1.0 m (3 ft) as more practical value.

Here we complete our design, and now [illegible] for checking the pressure [illegible] joist [illegible] per. The load on this panel is the load per unit length of joist multiplied by the joist spacing.

$$P = (2[illegible])(1.0) = [illegible] \text{ kN}$$

$$[illegible] = (1.[illegible])(2.134) = 8.[illegible] \text{ kN}$$

Bending moment $M_{[illegible]} = (1.[illegible])(3.[illegible]) = [illegible]$ kN·m

$$= [illegible] \text{ mm}^{3}]$$

$$= \frac{[illegible]}{[illegible]} = [illegible] \text{ psi} \quad [illegible]$$

$$= \frac{[illegible] \times 10^{6}}{[illegible]} = [illegible] \text{ psi}$$

Final Design

Decking: [illegible] in. (25 mm) lumber

Joists: [illegible] in. (610 mm) o.c. (610 mm) spacing

Stringers: [illegible] × 10 × 280 in. (254 × 254 × 7110 mm) spacing

Shores: [illegible] × 4 × 8 ft (100 × 100 × 2440 mm) [illegible]

13-5 WALL AND COLUMN FORM DESIGN

Design Procedures

The design procedure for wall and column forms is similar to that used for slab forms. Sheathing sits on joists, which are on stringers, and the load is transferred through the sheathing to the joists, stringers, and finally to the supporting structure. The maximum lateral pressure against the sheathing is determined from the appropriate equation (Eqs. 13-1, 13-2, or 13-3). Then the sheathing thickness is chosen based on the maximum allowable span for the sheathing, bending, shear, and deflection. The maximum allowable spacing of the joists is found in order to keep the required thickness of sheathing.

Next, calculate the maximum allowable and economical spacing of the stringers based on the design load, bending, shear, and deflection. If the stud span has all loads based, calculate the maximum allowable spacing, or wale supports the spacing, based on wale size and load. If the spacing has been previously determined, the minimum wale size. Double wales are commonly used (see Figure 13-7) to avoid the necessity of driving wales on the mention.

Now check the tie's ability to carry the load imposed by the wales and spacing. The tension [illegible] is calculated as the distance between the load imposed by the [illegible] of the spacing (in [illegible]) and wale spacing (in [illegible]). If the load exceeds the capacity of the tie, the wale or the tie spacing must be reduced.

The next step in the design process is to compute the pressure per square foot (kPa) to the gang form and the wales and where necessary [illegible] the [illegible] and the [illegible] and the [illegible] and

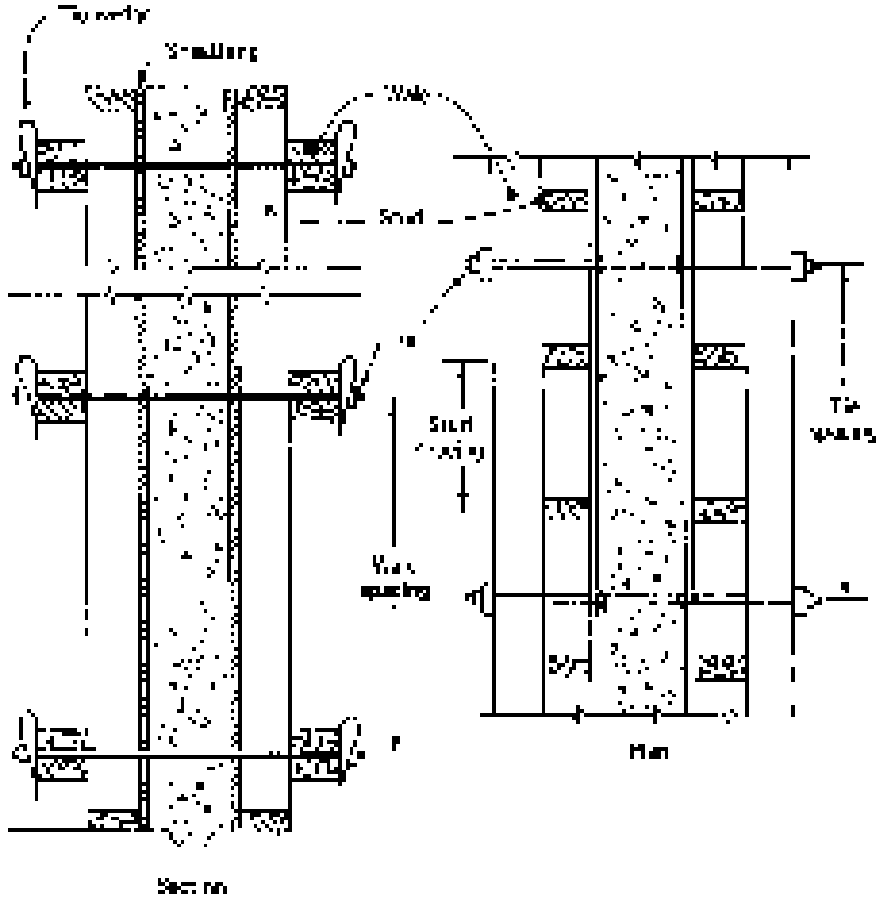

Figure 13–3 Wall form, Example 13–7.

$f_c' = 28$ MPa (4 000 psi)

$f_y = 415$ MPa (60 000 psi)

$E_s = 200\,000$ MPa (29×10^6 psi)

$\gamma_c = 23.5$ kN/m³ (0.0868 kip/ft³)

SOLUTION

Design Load

$C_t = 1.0$

$C_w = 1.0$

$$p = C_t C_w \left(150 + \frac{9000 C_c}{T + 17.8}\right) = (1.0)(1.0)\left(150 + \frac{(9000)(4)}{40 + 17.8}\right) = 2000\ \text{lb/ft}^2 = 95.8\ \text{kN/m}^2$$

$$p = C_t C_w \left(0.3 + \frac{2400}{T + 17.8}\right) = (1.0)(1.0)\left(0.3 + \frac{(2400)(1.8)}{(40 + 17.8)}\right) = 96.0\ \text{kN/m}^2$$

[illegible]

Select Stud Spacing (Three or More Spans)

Material: [illegible] (15-mm or [illegible] Ply [illegible] (Table [illegible])

Consider a [illegible] 12 in. wide × [illegible]

$w = [illegible] \times 1 \times 50 = 600$ [illegible]

$w = [illegible] \times 1 = 24.7 = 25.7$ kN/m ;

(a) Bending

$$s = 0.02\left(\frac{[illegible]}{w}\right)^{1/2}$$

$$= 0.02\left(\frac{0.878 \times 10^{6}}{25.7}\right)^{1/2} = [illegible]\ \text{in.}$$

$$s = 3.76\left(\frac{[illegible]}{w}\right)^{1/2}$$

$$= 3.76\left(\frac{320 \times 10^{6}}{25.7}\right)^{1/2} = 419\ \text{mm}$$

(b) Shear :

$$s = 2V\frac{F_v b_w d}{w}$$

$$= \frac{2(7)(0.517 \times 10^{6})}{600} = [illegible]$$

$$= [illegible] = 13.9\ \text{in.}$$

$$s = 1.67\frac{F_v b_w d}{w} = [illegible]$$

$$= \frac{(1.67)(2.95 \times 10^{6})}{25.7} = [illegible]$$

$$= [illegible] = [illegible]\ \text{mm}$$

(c) Deflection :

$$s = 1.66\left(\frac{EI}{w}\right)^{1/3}$$

$$= 1.66\left(\frac{10.3 \times 10^{6}}{6.0}\right)^{1/3} = 13.4\ \text{in.}$$

$$s = \frac{[illegible]}{[illegible]}\left(\frac{EI}{w}\right)^{1/3}$$

$$= \frac{[illegible]}{[illegible]}\left(\frac{[illegible] \times 10^{6}}{[illegible]}\right)^{1/3} = 340\ \text{mm}$$

Detailing covers: Maximum spacing = 152 mm (297 mm) [illegible] Adopt [illegible] mm; [illegible] spacing.

Select Wale Spacing (Three or More Spans)

Since [illegible] spacing is [illegible] (assumed) consider a uniform design load of 10.9 kN/m wide [illegible] on each strut.

$$[illegible] = [illegible] \times 10.9 = [illegible] \text{ kN/m}$$

$$[illegible] = \frac{[illegible]}{[illegible]} \times [illegible] = [illegible] \text{ kN/m}$$

(a) Bending:

$$[illegible] = 10.95\left(\frac{[illegible]}{2}\right)^2$$

$$= [illegible]\left(\frac{[illegible]}{[illegible]}\right)^2 = [illegible] \text{ kN.m}$$

$$\left[\begin{array}{l} [illegible] = \frac{10.0}{[illegible]}\left(\frac{[illegible]}{[illegible]}\right)^2 \\ [illegible] = \frac{10.0}{[illegible]}\left(\frac{[illegible] \times 10^6}{[illegible]}\right)^{1/2} = [illegible] \text{ mm} \end{array}\right]$$

(b) Shear:

$$[illegible] = 1.1\frac{[illegible]}{[illegible]} + 2d$$

$$= \frac{[illegible]}{[illegible]} + [illegible] = [illegible] \text{ m}$$

$$\left[\begin{array}{l} [illegible] = \frac{1.1}{[illegible]}\frac{[illegible]}{[illegible]} + [illegible] \\ = \frac{[illegible]}{[illegible]} = [illegible] \text{ mm} \end{array}\right]$$

(c) Deflection:

$$[illegible] = 1.65\left(\frac{[illegible]}{[illegible]}\right)$$

$$= [illegible]\left(\frac{[illegible]}{[illegible]}\right) = [illegible] \text{ mm}$$

$$\left[\begin{array}{l} [illegible] = \frac{[illegible]}{[illegible]}\left(\frac{[illegible]}{[illegible]}\right) \\ = \frac{[illegible]}{[illegible]}\left(\frac{[illegible]}{[illegible]}\right) = [illegible] \text{ mm} \end{array}\right]$$

Stud grade, nominal size, and maximum unsupported spacing: 2 × 12, 24 in. (610 mm). Use 16 in. (406 mm) spacing for stud bracing.

Select Tile Spacing (Three or More Spans, Double Walls)

Trial: assume tile spacing $s = 16\ \text{in}\ (406\ \text{mm})$

$$w = \frac{15}{12} \times 200 = 250\ \text{lb/ft}$$

$$w = \frac{250}{144} \times 16 = 27.8\ \text{lb/in.}$$

a) Bending

$$s = 100\left(\frac{F_b S}{w}\right)^{1/2}$$

$$= 100\left(\frac{(1.5)(0.0)(2 \times 5.25)}{250}\right)^{1/2} = 25.5\ \text{in.}$$

$$\left[\begin{aligned} s &= 100\left(\frac{F_b S}{w}\right)^{1/2} \\ &= 100\left(\frac{(1.5)(150)(2 \times 5.25 \times 10^{-6})}{1.46}\right)^{1/2} = 390\ \text{mm} \end{aligned}\right]$$

b) Shear

$$s = 12.0\frac{F_v A}{w} + 2d$$

$$= \frac{(12.0)(150)(2 \times 5.25)}{250} + (2)(9.5) = 23.5\ \text{in.}$$

$$\left[\begin{aligned} s &= \frac{12.0 F_v A}{100 w} + 2d \\ &= \frac{(12.0)(1.5)(2 \times 5.25 \times 10^{-6})}{(1.46)(100)} + 2(0.24) = 594\ \text{mm} \end{aligned}\right]$$

c) Deflection

$$s = 1.02\left(\frac{EI}{w}\right)^{1/3}$$

$$= 1.02\left(\frac{1.7 \times 10^6 (2 \times 5.359)}{250}\right)^{1/3} = 47.0\ \text{in.}$$

$$\left[\begin{aligned} s &= \frac{25.4}{100}\left(\frac{EI}{w}\right)^{1/3} \\ &= \frac{25.4}{100}\left(\frac{(11.7 \times 10^6)(2 \times 5.359 \times 10^{-6})}{1.46}\right)^{1/3} = 1193\ \text{mm} \end{aligned}\right]$$

Stud spacing. Maximum span is 27.0 in (714 mm). Select a 24-in (610-mm) stud spacing for maximum economy.

(a) Check the load.

$$P = \text{Wale spacing} \times \text{Tie spacing} \times p$$

$$= \frac{16}{12} \times \frac{24}{12} \times (90.0) = 160.0 \text{ lb (712 N)} < 1,000 \text{ lb} \qquad \text{OK}$$

$$\left[P = \frac{(400)(600)}{(1000)(1000)} \times 178.6 = 71.43 \text{ kN} < 13.34 \text{ kN}\right]$$

Check Bearing

(a) Solid wales:

$$\text{Bearing area (solid wales)} = 12(1.5) = 18.0 \text{ in}^2$$

$$[A = (12)(38) = 2387 \text{ mm}^2]$$

Load (each panel point) (P) = Load/unit second × Wale spacing/12

$$P = (90.0)\frac{16}{12} = 120 \text{ lb}$$

$$\left[P = (178.6)\frac{400}{1000} = 71.4 \text{ kN}\right]$$

$$f_c = \frac{P}{A} = \frac{120}{18.0} = 6.67 \text{ psi (46 kPa)} < 405 \text{ lb/sq in (F}_c\text{)} \qquad \text{OK}$$

$$\left[f_c = \frac{71.43}{2387} = 29.9 \text{ kPa} < 2,800 \text{ kPa (F}_c\text{)}\right]$$

(b) Use wedges or washers.

$$\text{Tie load (P)} = 160 \text{ lb [71.43 kN]}$$

$$\text{Bearing area (A)} = (1.5)(1.5)(2) = 4.5 \text{ sq in}$$

$$[A = (38)(38)(2) = 2890 \text{ mm}^2]$$

$$f_c = \frac{P}{A} = \frac{160}{4.5} = 35.6 \text{ lb/sq in} < 405 \text{ lb/sq in (F}_c\text{)} \qquad \text{OK}$$

$$\left[f_c = \frac{71.43}{2890} = 24.7 \text{ kPa} < 2,800 \text{ kPa (F}_c\text{)}\right]$$

Final Design

Sheathing: 1 × 8 (19 × 184 mm) Douglas fir-larch Grade B Douglas fir-larch wales for long-use horizontal.

Solution: Use 4 × 4 × 0.50 in. (100 × 100 × 13 mm) [illegible]

Walers: Double 2 × 4 s (50 × 100 mm) [illegible]

Ties: 3/4-in. (19-mm) [illegible], required at 24 in. (610 mm) [illegible]

13-6 DESIGN OF LATERAL BRACING

Many forms of bracing have been made by [illegible] designed lateral bracing. Minimum lateral design loads will be [illegible] given in Section 13-2. Design procedures for lateral bracing are [illegible] in the following paragraphs.

Lateral Braces for Wall and Column Forms

For wall and column forms, lateral bracing is usually provided by vertical rigid braces or angle wale bracing. Since wind loads are lateral loads in vertical forms, be applied to either direction perpendicular to the face of the form, [illegible] must be placed on both sides of the form. When rigid braces are used, they may be placed on only one side of the form if designed to resist both positive and negative wind forces. When braces are placed on only one side of a wall with the sheathing serving as the second form, braces must be designed to resist the lateral pressure of the concrete as well as wind lateral loads.

Inclined bracing will normally resist any wind uplift forces on wall forms. However, uplift forces on inclined braces may require additional consideration and [illegible] special anchors or deadmen. [illegible] per foot of form [illegible] by the design lateral load can be calculated by the use of Equation 13-[illegible] lateral load per unit [illegible] multiplied by spacing.

$$p = \frac{[illegible]}{[illegible]} \qquad (13\text{-}11)$$

$$[illegible] \qquad (13\text{-}12)$$

where P = [illegible] [lb/ft] [N/m]
W = lateral load [illegible] [lb/ft] [N/m]
h = height of form [ft] [m]
v = height of top of form [ft] [m]
$[illegible]$ = [illegible] [ft] [m]
$[illegible]$ = horizontal distance from [illegible] [ft] [m]

Forms are [illegible] only one side of the form, the allowable [illegible] will be the lesser of the three [illegible]

EXAMPLE 13–3

Determine the [illegible] for the [illegible] 2 × 4 in. (50 × 100 mm) cylindrical mast for the [illegible] of Example 13–2 [illegible] as shown in Figure [illegible]. Assume that [illegible] wind [illegible] [illegible] Table [illegible] [illegible] values [illegible] for [illegible]

	Allowable Stress	
	lb/sq in.	kPa
F_b	850	5860
F_v	95	655
E	1.4×10^6	9.65×10^6

SOLUTION

Determine the design bending moment per unit length of mast.

$$M = [illegible] \text{ (see Eq. 13–5)}$$

$$M = [illegible] \text{ (from Table [illegible])}$$

Determine the length of the mast using Equation 13–12.

$$[illegible]$$

$$= [illegible] = [illegible] \text{ ft}$$

$$[illegible] = [illegible] = [illegible] \text{ in}^3$$

The axial [illegible] acting on the mast [illegible] per unit length [illegible] be determined from Section 13–1.

$$[illegible] = \frac{[illegible]}{[illegible]} = \frac{[illegible]}{[illegible]} = [illegible] \text{ lb/in}^2$$

$$[illegible] = \frac{[illegible]}{[illegible]} = [illegible] \text{ kN/m}^2$$

Next, we determine the allowable compressive stress for [illegible] using Equation [illegible] or Table [illegible], [illegible] the minimum [illegible] ratio of [illegible] in.

$$[illegible] = \frac{[illegible]}{[illegible]} = [illegible]$$

$$[illegible] = \frac{[illegible]}{[illegible]} = [illegible]$$

Since the [illegible] exceed 50, [illegible] [illegible] [illegible]

Figure 13–9 Wall for Example 13–3.

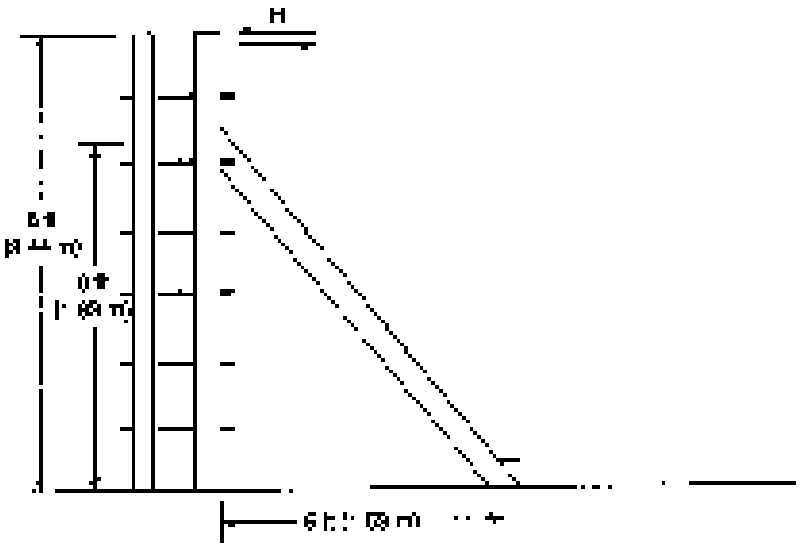

$$P_{cr} = \frac{\pi^2 EI}{(kL)^2} = \frac{\pi^2 (3.4 \times 10^7)}{(4.0)(7.5)^2} = 1{,}200{,}000$$

$$F_{cr} = \frac{P_{cr}}{A} = \frac{1{,}200{,}000}{1.130(0.28)^2} = 3{,}900 \text{ psi}$$

Since $F_{cr} > F_y$, use the value of F_y instead.

The maximum allowable compressive force per stud is:

$$P = (1.3)(3.5)(4300) = 22{,}750 \text{ lb}$$

$$f_c = \frac{(22{,}750)(2.5)^2}{10^6} = 0.0853 \text{ ksi}$$

The maximum stud bending is:

$$\sigma = \frac{P}{\rho^2} = \frac{0.0853}{0.0833} = 1.0 \text{ ksi}$$

$$\delta = \frac{0.0853}{0.0833} = 1.0 \text{ in}$$

Keep in mind that this design is based on providing lateral support at each end of the studs, regardless of their length.

Lateral Braces for Slab Forms

For elevated floor or roof slab forms, lateral bracing may consist of two braces between slab and a vertical bracing system to outside objects or from opposite to opposite forms. The following example illustrates the method of determining the design lateral load for slab forms.

EXAMPLE 13-4

Determine the design lateral load for the slab form in Figure 13-5. The slab is to be poured in one pour. Assume concrete density is 150 lb/ft³ (2400 kg/m³) and the form framework weighs 12 lb/ft² (0.57 kPa).

SOLUTION

$$\text{Total load} = (12)(1)(150) + 12 = 1812 \text{ lb/ft}^2$$

$$\left[\text{or } \frac{(0.3)(1)(2400)(9.81)}{1000} + 0.57 = 8.50 \text{ kPa}\right]$$

$$V = 0.02 \quad \text{[illegible]}$$

For the 20 ft (6.1 m) span, the width of the slab is 100 ft (30.5 m)

$$P_{SL} = (1812)(20)(100) = 1812 \text{ lb/ft}^2$$

$$[P = (8.50)(6.1)(30.5) = 2.62 \text{ MN/m}]$$

For the 100 ft (30.5 m) span, the width of the slab is 20 ft (6.1 m)

$$P_{SL} = (1812)(100)(20) = 36\,240 \text{ lb/ft} = 36.24 \text{ kip/ft (nominal value)}$$

$$[P = (8.50)(30.5)(6.1) = 1.58 \text{ MN/m} = 1.58 \text{ kN/m}]$$

Therefore, use H_{SL} = 1.50 kip/ft (1.58 kN/m) = nominal load

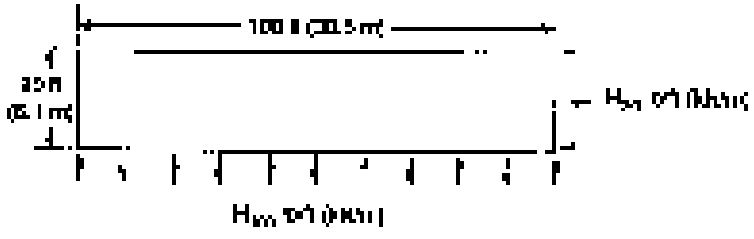

Figure 13-5 Slab form lateral design, Example 13-4.

PROBLEMS

1. Derive the expressions for rotating given in Table 13.5 using the relationships of Dow[illegible] Equation 3.3.

2. Calculate the maximum allowable span for [illegible] Class I plywood decking [illegible] supports carrying a design load of 130 lb/ft (1.9 kN/m). Assume [illegible] the deck spans continuous over three or more spans and have deflection [illegible] of span length.

3. Design a [illegible] 5 × 12 (4 × 10) glulam beam to support the roof [illegible] 1.5 [illegible] and a temperature [illegible] 37°C (100°F). The [illegible] will be Type [illegible] Douglas-fir [illegible] 3-in. (19-mm) Class I plywood [illegible] supports. The [illegible] 2 × 4-in. (50 × 100-mm) members [illegible] 2 × 4-in. (50 × 100-mm) [illegible] spaced 2 ft (610 mm) apart. The roof [illegible] 250 lb/ft² (12 kN/m²). Assume the roof [illegible] 0.22 in. (5.6 mm) [illegible] the beam [illegible] Table 13. Keep [illegible] Table 13. Limit [illegible] span length. Design [illegible] 25 lb/ft² (1.2 kN/m²).

4. What should be the design load [illegible] 13 [illegible] 2 × 6 [illegible] 2 × 6 [illegible] 2 × 6

processes given in Table 13–6. Input details in the design [illegible] conditions [illegible] Universal Factors. Hydrometeorological [illegible] and selection [illegible] given is [illegible] or parallel [illegible].

REFERENCES

1. American Institute of Timber Construction, Timber Construction Manual, [illegible] Edition, [illegible] Wiley, 1985.
2. American Society for Civil Engineers, [illegible] — [illegible] Washington.
3. Canadian Lumber, [illegible] — The Highway, [illegible] Association, [illegible].
4. Canadian Forest Products Laboratory, [illegible], Ottawa, [illegible].
5. Canadian Institute of Timber Construction, Timber Structures, Fundamentals, [illegible] 1986.
6. Hans Mikkelsen, Structures, New York: [illegible] Press, 1981.
7. Modern Design Loads for Buildings and Other Structures, ASCE 7, [illegible], [illegible].
8. National Design Specifications for Wood Construction, [illegible] Forest Products Association, Washington, DC.
9. Ramsey, Charles G., and Harold R. Sleeper, Architectural Graphic Standards, [illegible] Edition, New York: John Wiley & Sons, Inc., [illegible].
10. Standard Design Specifications AISC—The Institute of Steel Construction, Chicago, [illegible].

14

Masonry Construction

14–1 BRICK MASONRY

Masonry Terms

A number of traditional terms are commonly used in brick masonry construction. The [illegible] with these terms will be of interest to anyone interested in construction practices described in this section and in more [illegible] study of these terms and practices is [illegible] also applicable to masonry construction, which is presented in Section 14–3. Figure 14–1 illustrates the terms applied to the [illegible] possible positions in which a [illegible] brick may be placed. The four surfaces of a brick are [illegible] the face, the end, the side, the wall, and the edge, as shown in Figure 14–2. [illegible] fit into a wall in a variety of ways, [illegible] common shapes are shown in Figure 14–3.

Figure 14–4 illustrates the terms applied to the components of a brick wall. Accessories such as anchors, ties, and the like are not shown. The wall finishes a nominal [illegible] brick course above the ground or other [illegible] position. A single brick course set on edge is a brick header. A brick placed with its long axis perpendicular to the face of the wall, regardless of the way it is laid, is a stretcher. The brick in the foreground of Figure 14–4 is in the stretcher position. Adjacent bricks in a course are laid [illegible] in which mortar is applied to the top of the wall before the next course is laid. The mortar joint is a horizontal joint between brick courses. A vertical joint is a vertical joint between brick courses. The actual thickness of mortar joints is [illegible] for placing mortar and the [illegible] Joints in the foreground are [illegible] the exposed surfaces of these joints may be finished by striking, tooling, or striking, as shown in Figure 14–5. A struck joint is formed by striking excess mortar with the trowel and then compacting the joint with the trowel [illegible]. A tooled joint is formed by using a special tool to compact and shape the mortar in the joint. The tool may be a round or flat [illegible] the joint. Tooled joints have the most resistance to the [illegible] struck joints are formed by removing a layer of mortar from the joint with a special tool. Struck joints are often used for appearance but are difficult to make completely watertight.

Figure 14-1 [illegible] positions. (Courtesy of The Brick Industry Association)

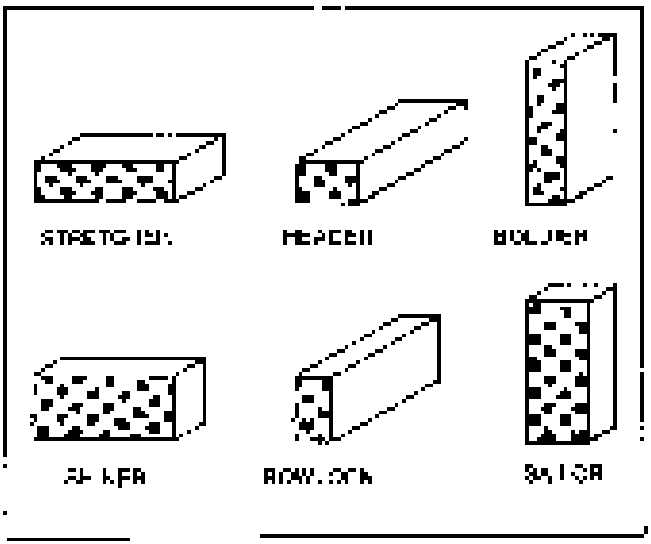

Figure 14-2 Identification of brick surfaces

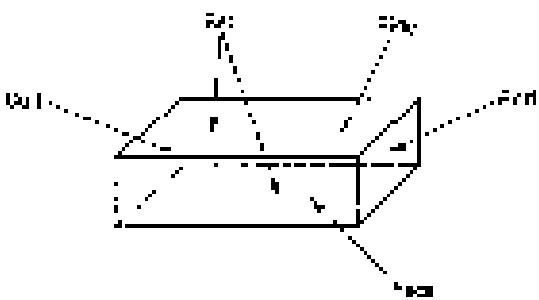

Figure 14-3 Names of brick.

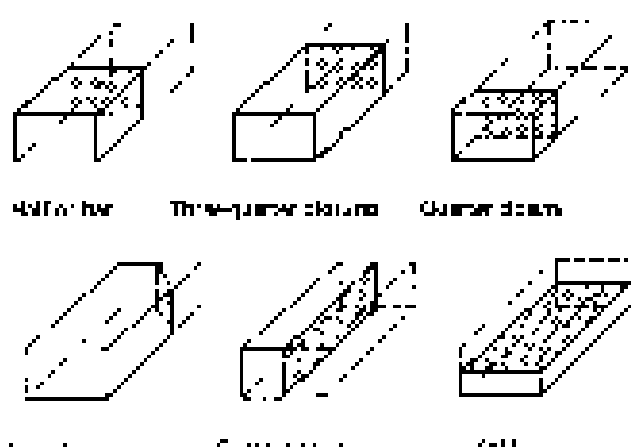

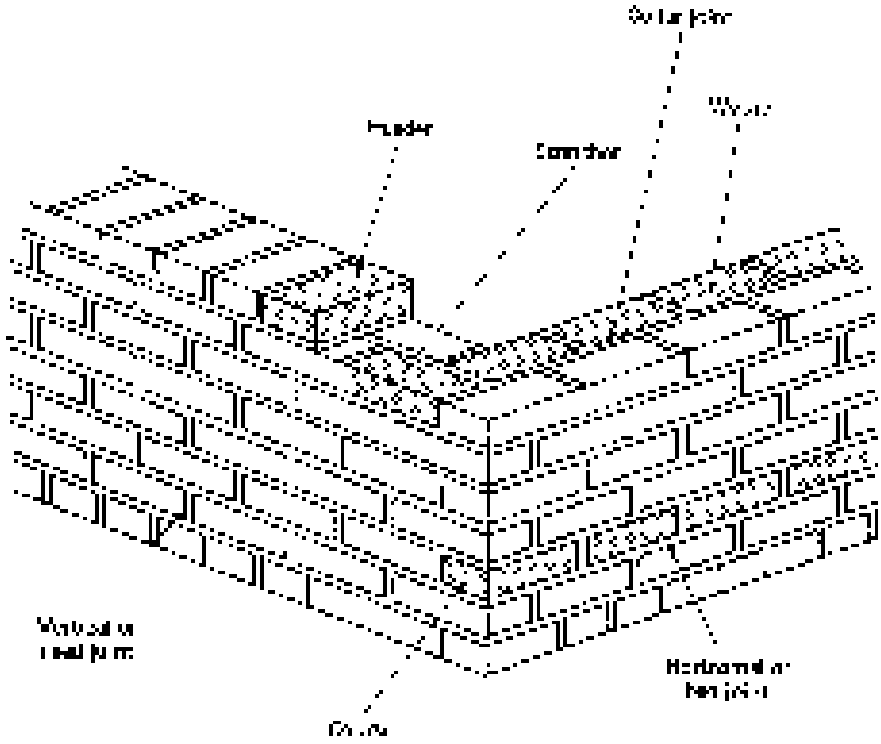

Figure 14-4 Elements of a brick wall

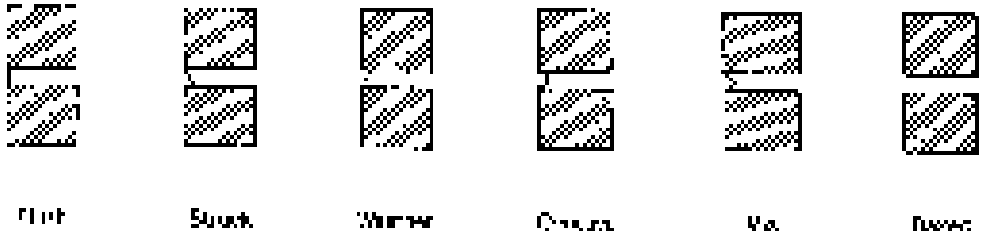

Figure 14-5 Masonry unit shapes.

Materials

Brick is manufactured from natural clays and shales. Typical brick sizes are illustrated in Figure 14-6. The standard size, 57 × 90 × 190 mm (2¼ × 3½ × 7½ in.), is used for most common bricks. Oversized modular bricks, 90 × 90 × 190 mm (3½ × 3½ × 7½ in.), are also available. The actual dimensions of the bricks are specified. The nominal size of brick includes a 10 mm (⅜ in.) mortar joint. Standard block units, 90 × 200 × 400 mm (3½ × 7½ × 16 in.), are commonly

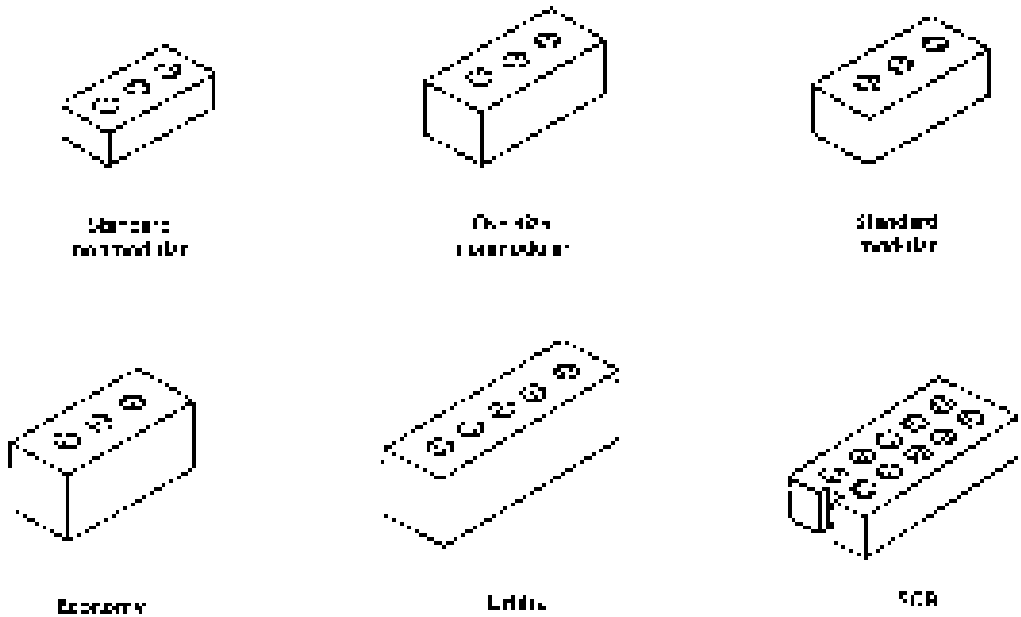

Figure 14.6 Typical brick shapes

[illegible]

The compressive strength of individual bricks produced in the United States ranges from about 2500 psi (17.2 MPa) to over 20,000 psi (137.9 MPa). The overall compressive strength of a brick wall is influenced by both the compressive strength of the individual bricks and the type of mortar used. Relatively [illegible] procedures are used to determine the compressive strength of brick structural units by either performing a prism test or a masonry assemblage test. Typical strength values based on prism tests are used in the design. A normal 2500 psi compressive strength is used for masonry units from 2500 psi (17.2 MPa) for 4000 psi (27.6 MPa) brick units to 8000 psi (55.1 MPa) brick with Type N mortar and construction inspection by an accredited engineer.

Mortar is an important material covered by ASTM Standard C270 (Standard Specification for Mortar for Unit Masonry) and ASTM Standard C476 (Standard Specification for Mortar and Grout for Reinforced Masonry). The principal mortars are known as Types M, S, N, O, PM, and [illegible]. Type M mortar is a high-strength mortar [illegible] strength and durability are required. Type S mortar is a medium high-strength mortar for general use. Type N mortar is a medium-strength mortar for general use [illegible] Type O mortar is a low-strength mortar [illegible]. Type O is a low-strength mortar [illegible] used for [illegible] and [illegible] for [illegible]. Types PM and PL are [illegible] for [illegible]. Mortar proportions may be specified by [illegible] or by proportions. [illegible] are listed in Table 14.1.

Table 14–1 Mortar specifications

Mortar Type	By Strength: 28-d Compressive Strength, kPa (psi) (MPa)	By Proportion: Portland Cement	Masonry Cement	Hydrated Lime
M	2500 (17.2)	[illegible]	None	[illegible]
S	[illegible] (17.1)	[illegible]	None	[illegible]
N	750 (5.2)	[illegible]	None	[illegible]
O	[illegible]	None	None	[illegible]
K	2500 (17.2)	None	[illegible]	None
PL	2500 (17.2)	[illegible]	None	[illegible]

[illegible]

Pattern Bonds

[illegible]

Hollow Masonry Walls

[illegible]

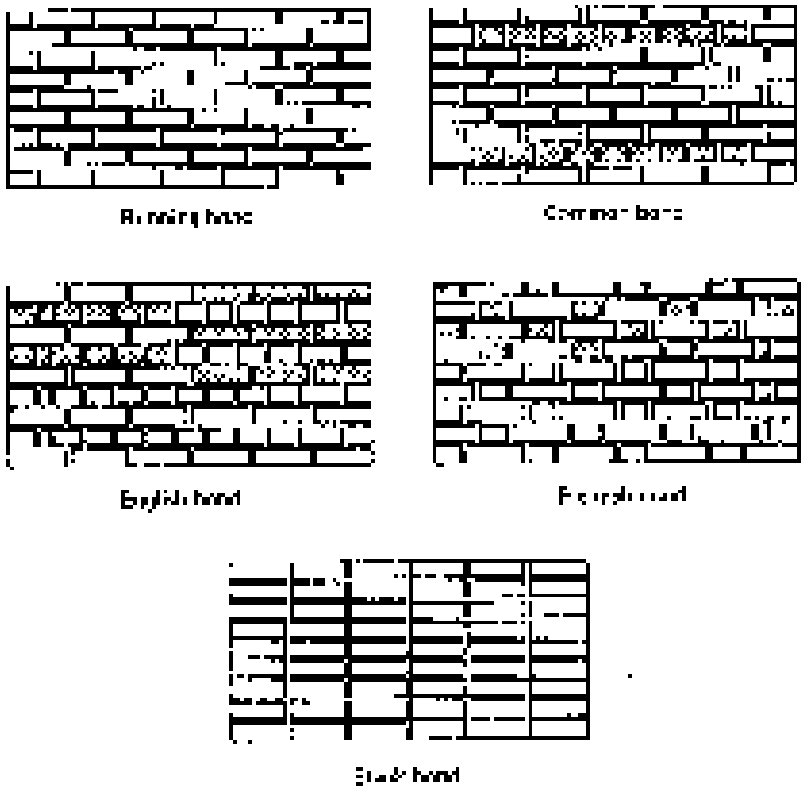

Figure 14–7 Typical brick masonry bonds.

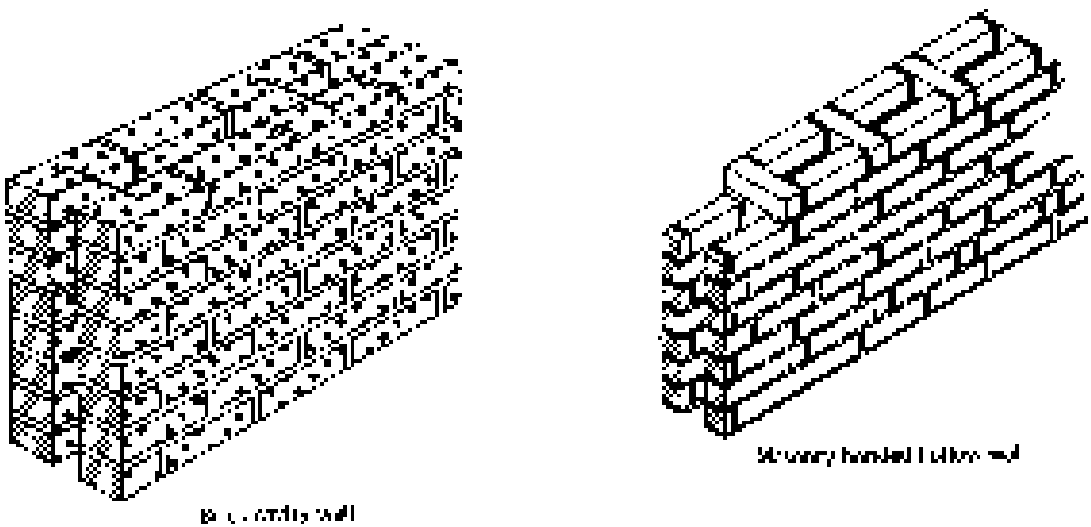

Figure 14–8 Brick cavity and masonry bonded hollow walls.

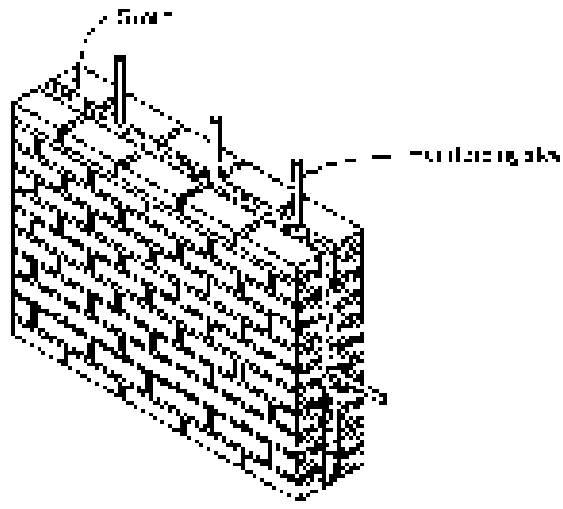

Figure 14–9 Reinforced brick masonry wall.

[illegible] of horizontal reinforcement in the bottom of the hollow wall cavities helps bridging every 16th course. [illegible] bedding beds and shallow [illegible] installing flashing in the bottom of the wall [illegible] weep holes along the [illegible] surface. [illegible] multiple-story [illegible] and providing [illegible] surface. [illegible] be used [illegible] if desired.

Reinforced Brick Masonry

The reinforced brick masonry (RBM) [illegible] brick masonry [illegible] is embedded to provide additional strength. Typical [illegible] brick masonry wall construction [illegible] in Figure 14–9. [illegible] is basically the same [illegible] [illegible] placed [illegible] [illegible] bedded [illegible] [illegible] RBM [illegible] building constructed with [illegible] brick (25% [illegible] reinforcement [illegible] is shown in Figure 14–10. The [illegible] bond patterns [illegible] to provide [illegible] wall construction. [illegible] The [illegible] masonry reinforcement is shown in Table 14–3.

Bond Beams and Lintels

A bond beam is [illegible] horizontal beam [illegible] masonry designed to provide additional [illegible] cracking in masonry walls. [illegible] frequently placed [illegible] and roof levels but may be used [illegible] vertical intervals [illegible] specifically [illegible]. Support [illegible] masonry walls may be provided by [illegible] masonry [illegible] in Figure 14–11. [illegible] bond beams of [illegible] and [illegible] masonry used to span openings in masonry walls.

Figure 14–10 Seventeen-story building constructed with reinforced brick masonry bearing walls. (Courtesy of The Brick Industry Association.)

Table 14–2 Protection for Masonry Reinforcement

Application	Minimum Cover (Exposed Face)
Potential for damage	3 in. (76 mm)
Other than severe or aggressive exposure to weather or soil	[illegible]
Horizontal reinforcement	
Bars larger than #5 (#16) diameter	[illegible]
All other	
Not exposed to weather or soil	1 bar diameter or [illegible]
Exposed to weather or soil	[illegible]

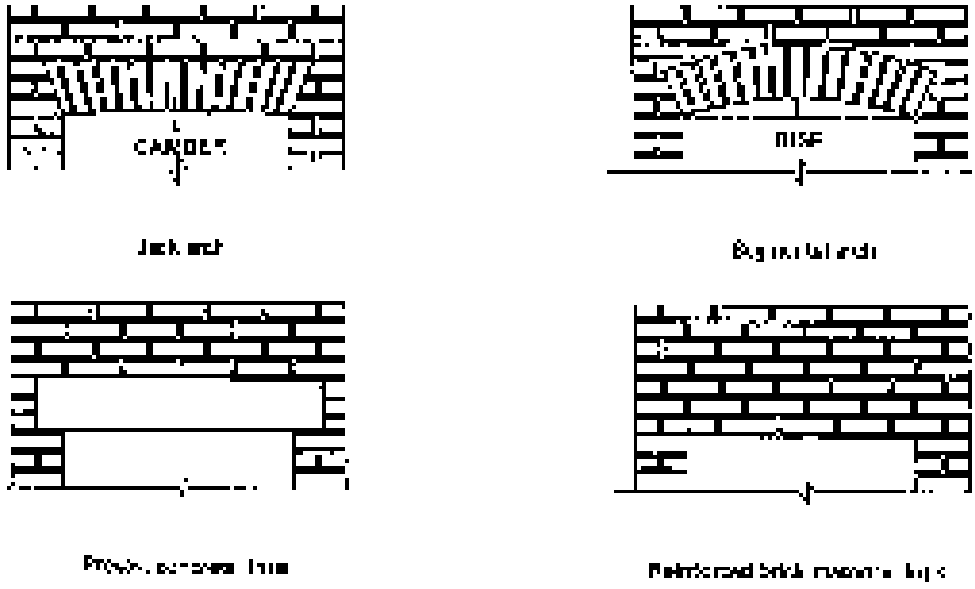

Figure 14–13 Support over openings in brick walls.

Control Joints and Flashings

Expansion or control joints in masonry walls are used to prevent differential movement of walls caused by shrinkage of masonry units, thermal expansion and contraction, compression and moisture characteristics, and foundation settlement. Control joints are generally placed in masonry to avoid cracking. The usual procedure is to separate walls into sections with vertical expansion joints where differential movement may occur. Long, straight walls should be divided into sections. Other expansion joints are placed at corners, at changes in heights or columns and pilasters, at wall chases, at long walls and under shelf angles in multistory buildings. Structural bonding ties in the expansion joint must be provided by interlocking construction or by flexible connecting devices in the joint. Some typical expansion joints used for masonry walls are shown in Figure 14–17. The example of control joints must be considered with a flexible solution to prevent cracking and distortion.

Flashing consists of layers of impervious material used to prevent moisture migration. Flashing must be placed behind the outside cladding, should direct water away from joints or properly weep out the moisture in the wall, and should be installed in such a way that it does not interfere with the structural integrity of the wall. Typical flashings for brick masonry are shown in Figure 14–18. Flashings used when masonry walls or chimneys are adjacent to other parts of the building are called flashing and counterflashing. The base flashing covers the joint between the masonry and the other building material, and the counterflashing covers the base flashing and the vertical surface above the masonry, as in Figure 14–19.

Figure 34-12 Expansion joints in brick masonry. (Courtesy of the Brick Institute of America)

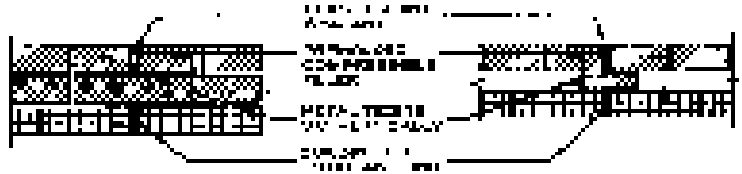

EXPANSION JOINTS IN STRAIGHT WALLS

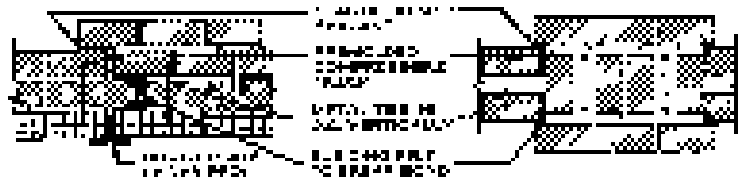

EXPANSION JOINTS AT PILASTERS

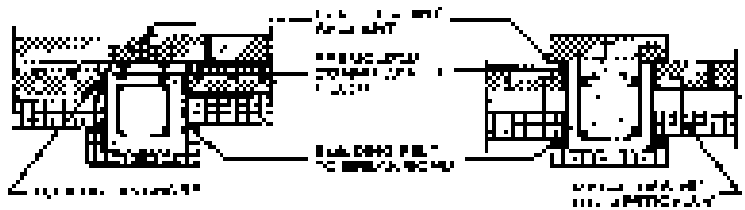

EXPANSION JOINTS AT CONCEALED COLUMN

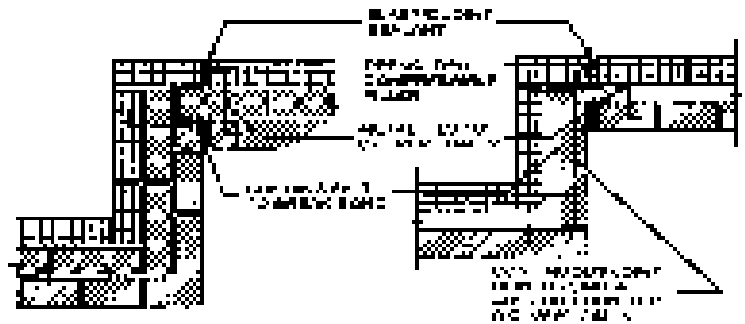

EXPANSION JOINTS AT OFFSETS

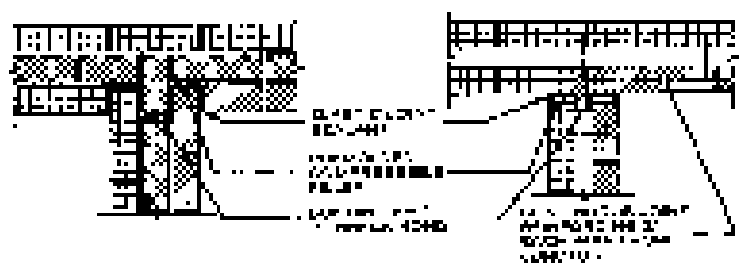

EXPANSION JOINTS AT JUNCTURES

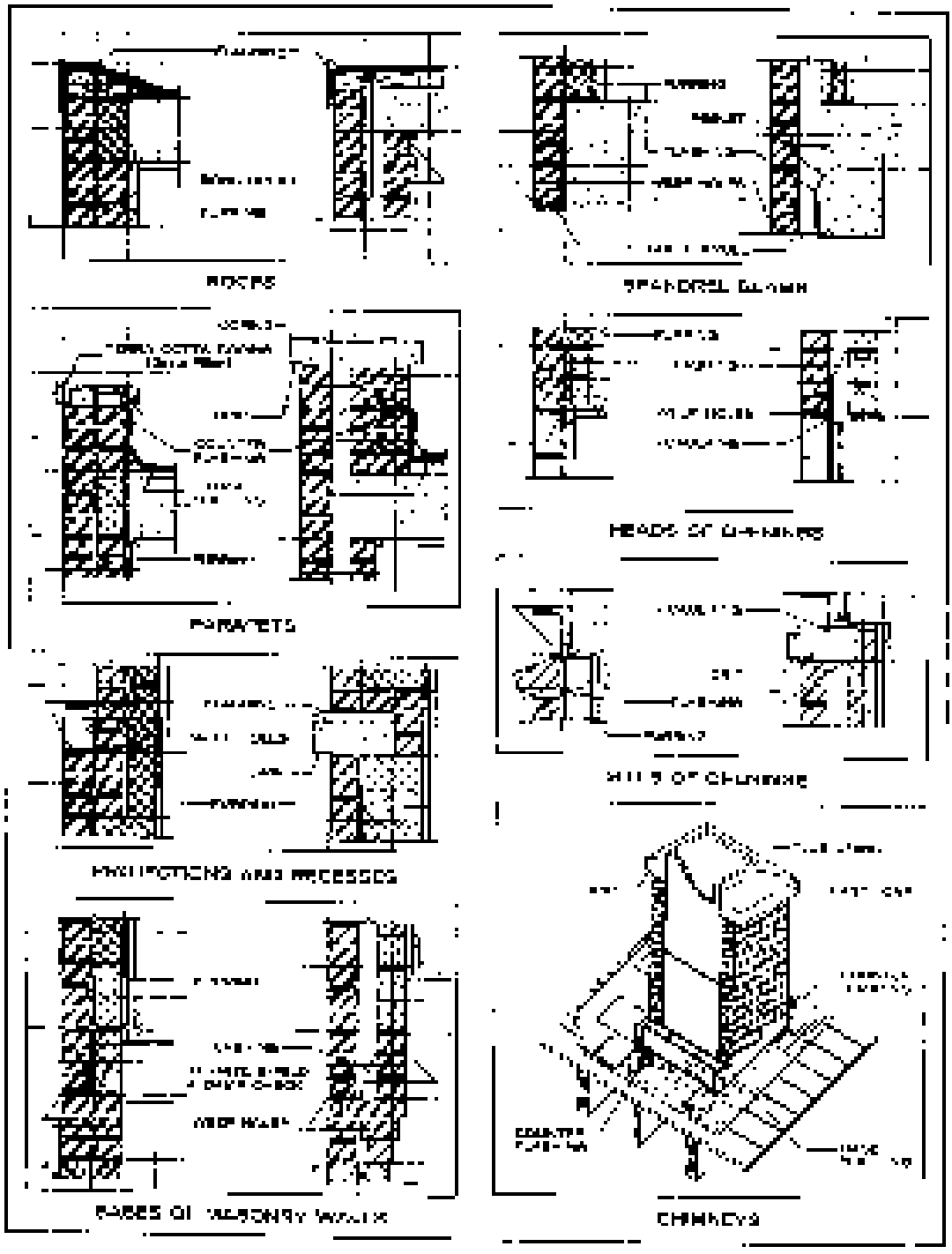

Figure 14–13 Bearing uses in brick masonry construction. (Courtesy of the Brick Institute of America.)

14–2 CONCRETE MASONRY

Materials

Concrete masonry units are classified as concrete [illegible] load bearing concrete block [illegible] concrete block [illegible] concrete block. Concrete block units are [illegible] weather and appearance [illegible] Units having [illegible] vertical [illegible] Block. The usual [illegible] [illegible] Typical shapes and sizes of concrete masonry units are shown in Figure [illegible]. The nominal and actual dimensions of a typical block are 8 × 8 × 16 in (200 × 200 × [illegible] mm); actual size 7⅝ × 7⅝ × 15⅝ in (194 × 194 × [illegible] mm). Total [illegible] in or 200 [illegible] half-high 8-in or 200 mm block [illegible]. Concrete blocks are available as either [illegible] or lightweight blocks, depending on the type of aggregate used. Normal weight [illegible] blocks typically weigh about 50 lb (23 kg) [illegible] the [illegible] weight unit might weigh 35 to 38 lb (16 × 19 kg). Standard [illegible] masonry units are [illegible] brick masonry (Section 14–1). [illegible] 2.5 [illegible] [illegible] cavity walls should be used for [illegible] glazing.

Concrete block masonry can be laid without [illegible]. Either standard or special block units can be stacked without mortar and [illegible] the approximate [illegible] bearing material [illegible] side surfaces. In [illegible] block laying [illegible] provides [illegible] bonding as well as [illegible]. The [illegible] concrete block [illegible] may be [illegible] the time [illegible] and [illegible]. In addition, the flexural and compressive strength of a [illegible] wall may be greater than that of a comparable block wall. There are also several types of concrete block units which include ledges to provide [illegible] bonding [illegible] walls are [illegible] without mortar.

Concrete masonry units are available in various shapes, sizes, and [illegible] to meet [illegible] concrete masonry.

Reinforced Concrete Masonry

Reinforced concrete masonry units are used to provide additional strength and [illegible] Figure 14–[illegible]. To [illegible] of reinforcing [illegible] concrete block [illegible]. A [illegible] of the wall [illegible] concrete [illegible] by filling [illegible] block [illegible] with [illegible]. Vertical reinforcement is provided by placing [illegible] in cells of the [illegible] and filling [illegible]. Additional horizontal reinforcement is [illegible] in the bedding [illegible] joints. [illegible] type of [illegible] is appropriate for areas of high design [illegible] or [illegible].

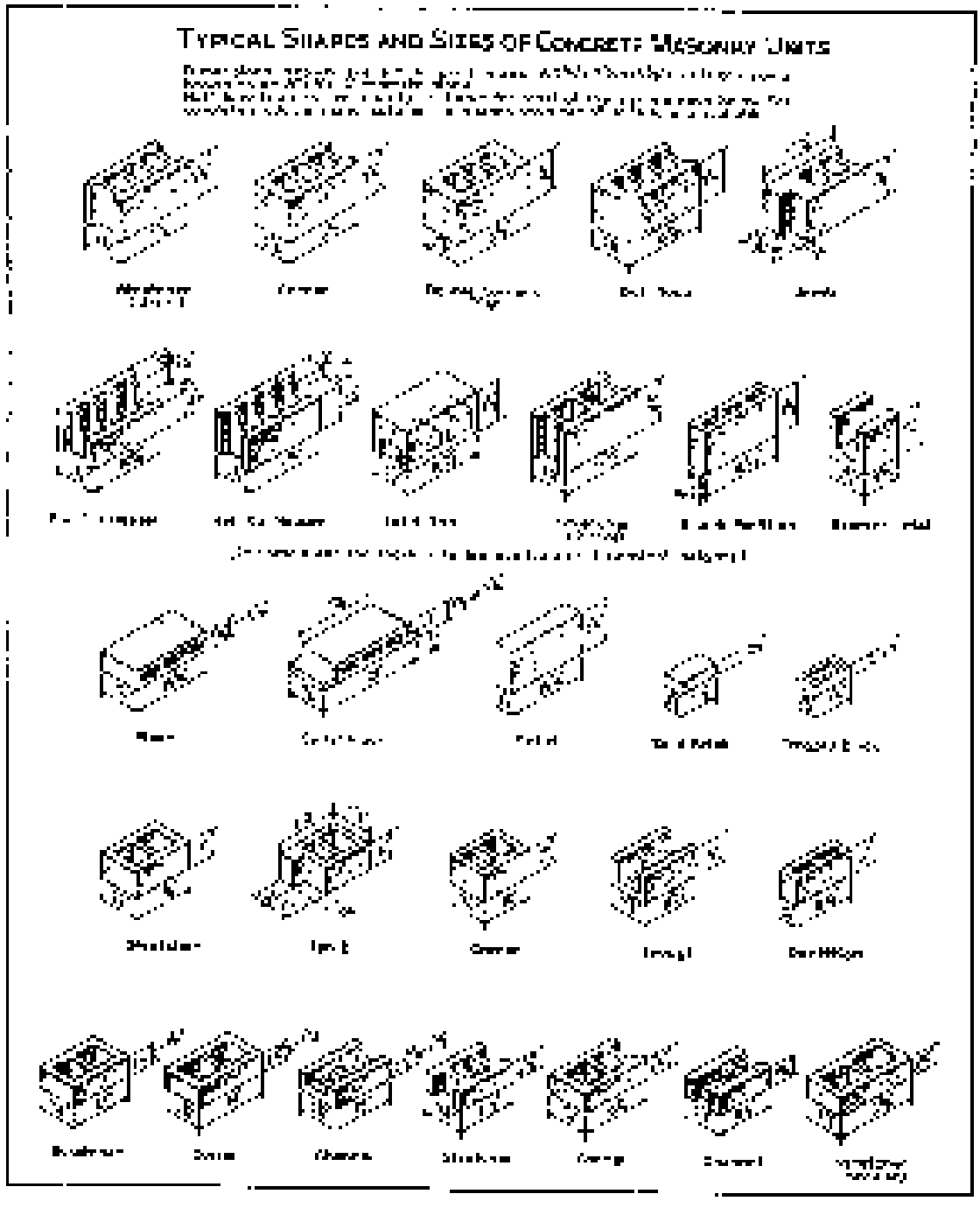

Figure 14–14 Typical concrete masonry units. (Courtesy of Portland Cement Association)

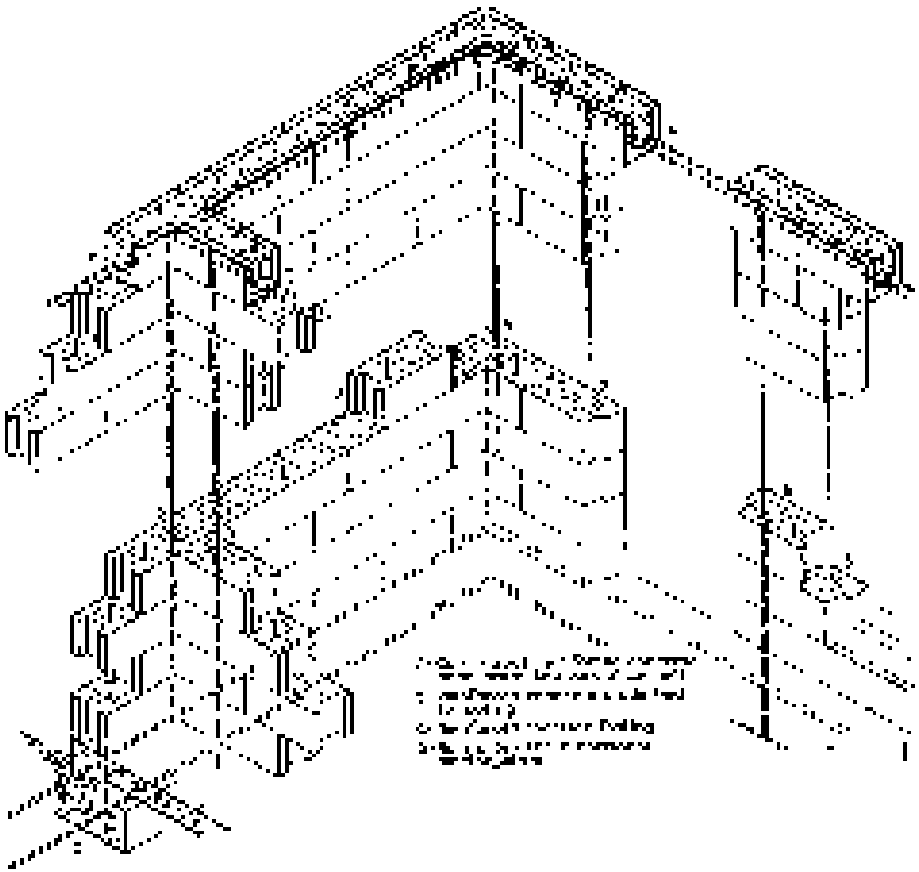

Figure 14–15 Some methods for reinforcing concrete masonry walls. (Courtesy of the Portland Cement Association)

Additional approaches of horizontal joint reinforcement are shown in Figure 14–16 including fabrication to backbone units and the use of wire in masonry walls and in facing stretcher units. Reinforced concrete masonry construction is commonly used in high-rise building construction. Depending on the design loads, one or more of the concrete block cores can be filled with conventional concrete. A typical reinforced concrete masonry wall is shown under construction in Figure 14–17. Details of the placement of vertical reinforcement in a reinforced concrete masonry wall are shown in Figure 14–18. Figure 14–19 shows grout being pumped into the cavities of a reinforced concrete masonry wall. The maximum approved unit of lateral pressure for masonry grouting is shown in Table 14–2.

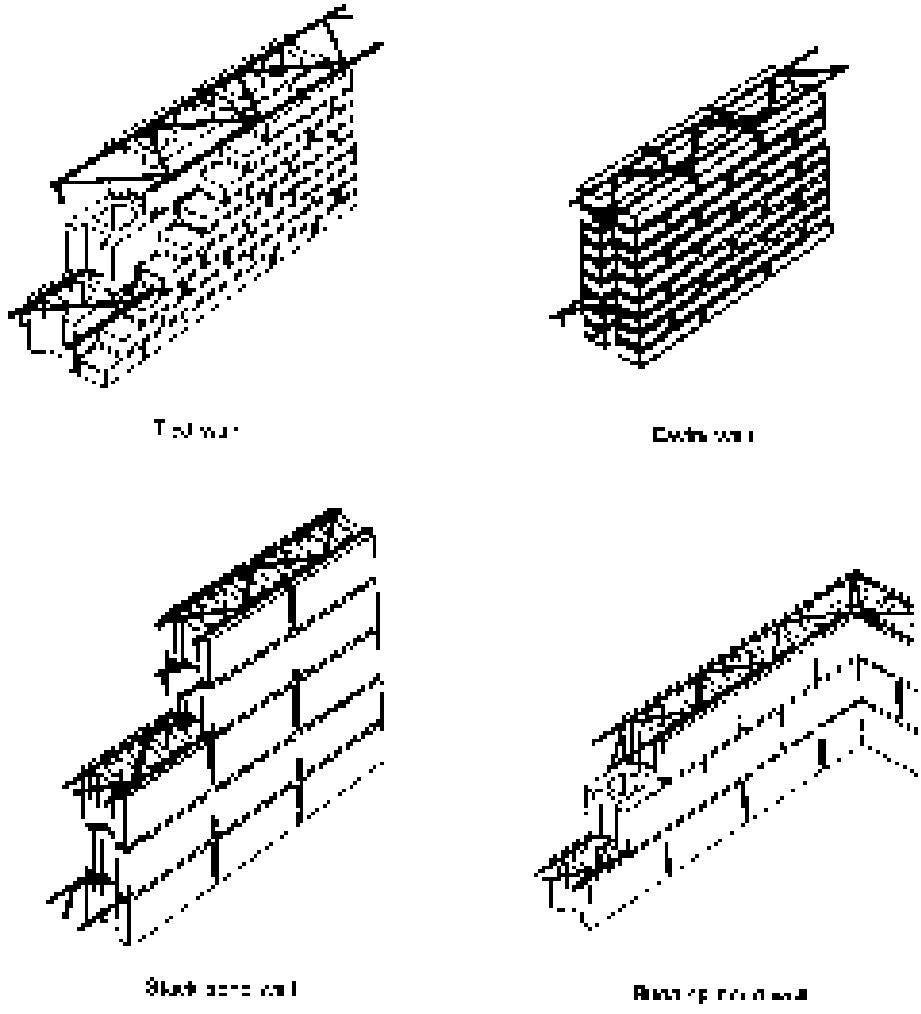

Figure 14–16 Horizontal joint surfaces (Courtesy of Dur-O-Wal, Inc.)

Pattern Bonds

The stacking bond is generally a normal symmetrical pattern and most commonly used for masonry units 3 in. (76 mm) thick or more. However, a number of other pattern bonds have been developed to provide an improved effect. Several of these patterns are illustrated in Figure 14–17. All of the pattern bonds are based on a module equal to the masonry unit's nominal length plus one nominal vertical joint. Masonry units of any nominal width, and with nominal lengths of 2 in. (51 mm) or more, are available.

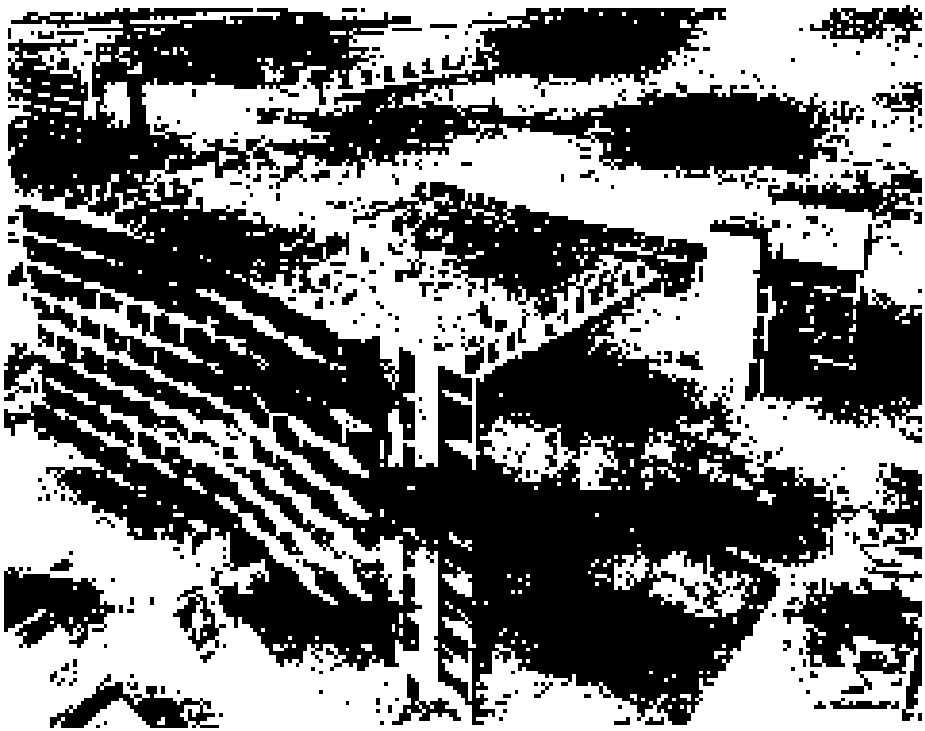

Figure 14-17 Construction of a high-rise [illegible] using reinforced concrete assembly walls. (Courtesy of Portland Cement Association.)

Figure 14-18 Placement of horizontal steel in reinforced concrete masonry wall. (Courtesy of Portland Cement Association.)

Figure 14-19 Parking [illegible] perforated concrete masonry wall. (Courtesy of Portland Cement Association)

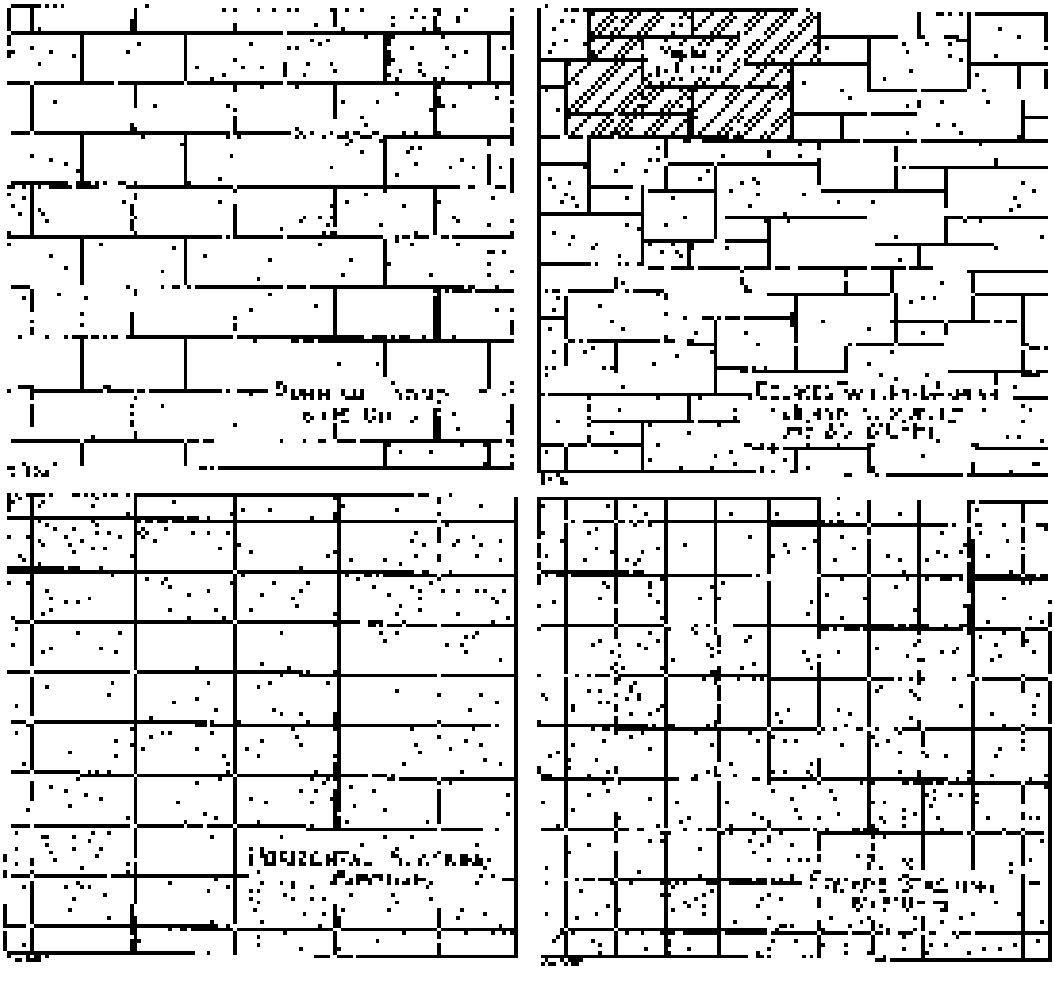

Figure 14-20 [illegible] Solar Lands. (Courtesy of Portland Cement Association)

14-3 OTHER MASONRY MATERIALS

In addition to brick and concrete, masonry units of various sizes, shapes and kinds are used in masonry construction. Stone is used in a manner similar to concrete block. However, stone units are selected from the United States only and are usually quarried or glacier-carved. Stone units are cut to size by using a mechanical saw or chisel. Stone units are installed in accordance with prescribed patterns. Stone veneer is held in place by steel anchors in the mortar joints or by mechanical means (see Figure 14-2). Slip joints are also used for window sills, lintels, parapet coping caps and wall panels. Construction details for masonry veneer and structural stone panels are illustrated in Figure 14-22.

Figure 14-21 Stone veneer. (Courtesy of Indiana Limestone Institute of America, Inc.)

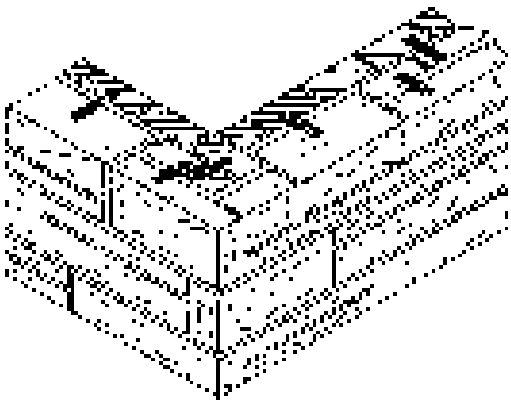

Stone Veneer with Hard Stone Anchored to Brick Backing

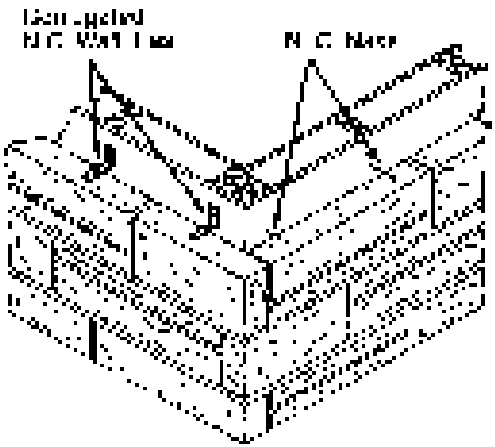

Stone Veneer Anchored to Wood Frame Backing

N.C. = noncorrosive

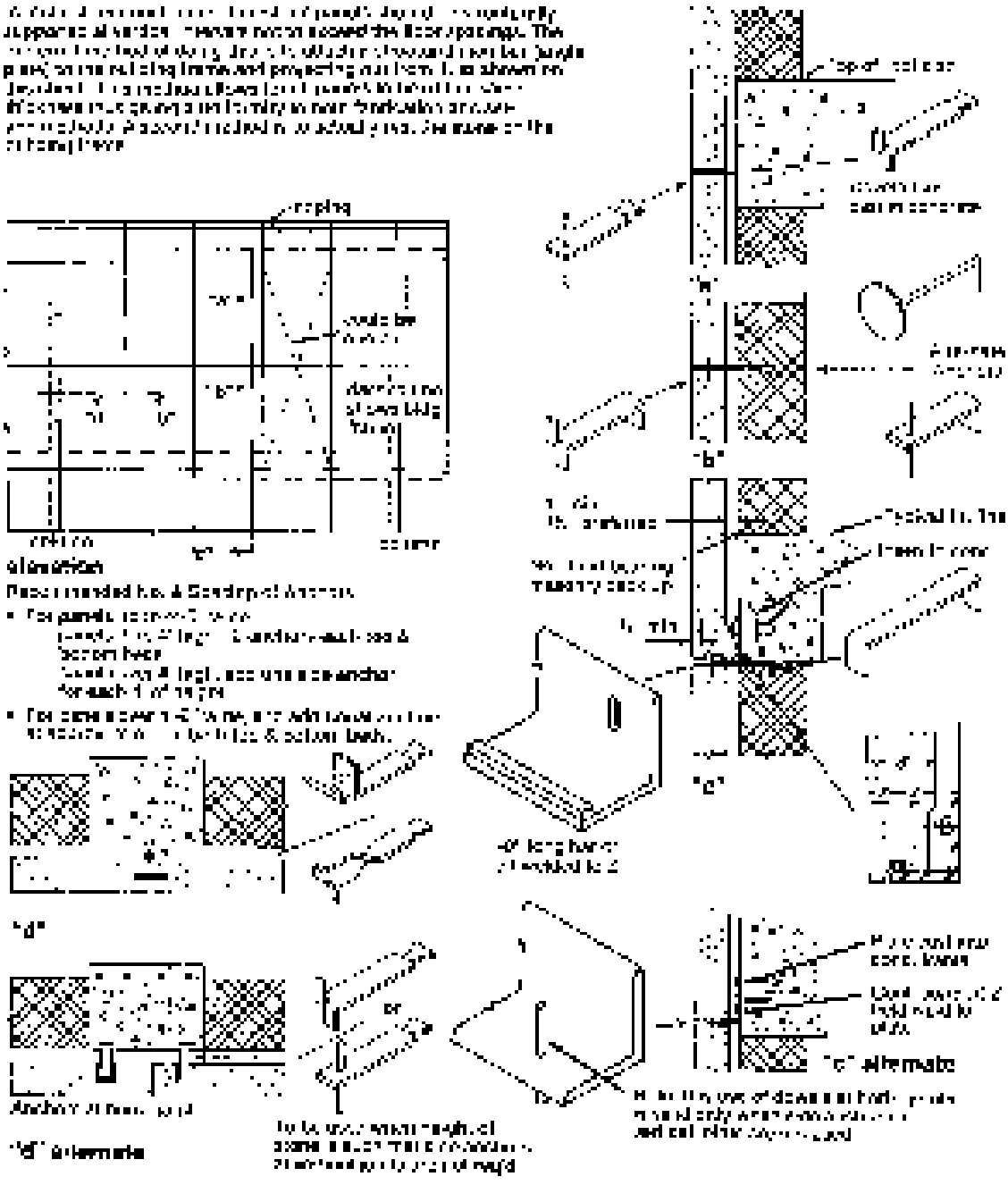

Figure 10-22 A variety of stone panels in masonry building. (Courtesy of [illegible] Institute of America, Inc.)

14–4 ESTIMATING QUANTITY OF MASONRY

Number of Bricks Required

Although tables are available for estimating the quantity of bricks required for construction, a reasonably precise estimate is not difficult. For instance, the number of bricks required for a masonry wall can be found by multiplying the net surface area of the wall, obtained by deducting the surface area of openings, by the number of bricks per square foot (including the mortar joint) covering the wall, as obtained from Table 14–1. Multiplying this number by the number of walls of that thickness gives the total number of bricks for the wall.

Thus, the gross surface area of the wall is calculated in square feet (ft^2) and the area of openings is subtracted to give the net surface area of the wall. Doors, windows, and other openings are subtracted to give the net surface area. Next, the surface area of the brick is per the wall including the mortar joint. Dividing the wall net surface area by the surface area of each brick (including the mortar joint) yields the number of bricks per wall for a wall. The number of bricks required is then multiplied by the wall thickness (number of wythes). Finally, a factor, usually 1.05 (5%), is added for waste. The method is illustrated in Example 14–1.

EXAMPLE 14–1

Calculate the number of bricks (8 in × 2 in × 4 in) (203 × 51 × 102 mm) laid in running bond required for a double wythe wall 8 ft high by 14 ft long (2.44 × 4.27 m) having one 6 ft × 4 ft (1.83 × 1.22 m) window and one 3 ft × 7 ft (0.91 × 2.13 m) door. Mortar joints are 3/8 in (10 mm) allowance for waste.

SOLUTION

$$\text{Net wall area} = (8 \times 14) - \frac{(6 \times 4)}{144} - \frac{(3 \times 7)}{144} = 109.5\ \text{sq ft}$$

$$[(2.44 \times 4.27) - (1.83 \times 1.22) - (0.91 \times 2.13)] = 9.2\ m^2$$

$$\text{Bricks per square foot} = \frac{(12 \times 3) - (0.5)(2)}{144} = 0.1528\ \text{sq ft}$$

$$[= (0.203 + 0.010)(0.051 + 0.010) = 0.01512\ m^2]$$

$$\text{Number of bricks required} = \frac{109.5}{0.1528} \times 2 \times 1.05 = 1500$$

$$\left[\frac{9.2}{0.01512} \times 2 \times 1.05 = 1300\right]$$

Quantity of Mortar Required

A similar procedure can be used to estimate the quantity of mortar required for a particular wall. First, the volume of mortar in a wall is determined. Equation 14–11 may be used for this purpose.

$$\text{Volume per brick} = \frac{(t)(L)(H) - (L + H + t)}{V_b} \qquad (14\text{–}11)$$

where t = joint thickness (m or in)
H = brick wall height (m or in)
L = brick length (m or in)
V_b = brick volume (m³ or in³)

Multiplying the mortar required per brick by the number of bricks and adding a waste factor results in the total mortar required per wall. When the wall is nonuniform, as with chimneys, one must multiply by the number of bricks required for the wall, the volume required to fill the spaces within the wall. The volume of mortar required for the joints of the joint thickness must be subtracted from the volume of the wall. Again, a waste factor must be added. A sample calculation is given in Example 14–2.

EXAMPLE 14–2

Determine the quantity of mortar required for the wall of Example 14–1. The joint thickness between bricks is 0.25 in (6 mm). Assume a 25% waste factor.

SOLUTION

$$\text{Volume per brick} = \frac{(0.25)(1.5)(0.08) + 0.25 + 0.5}{0.6} = 0.0165\ \text{m}^3$$

$$= \left[(0.010)(0.150)(0.080) + 0.010 + 0.020\right] \div (0.150)(0.080) = 0.0000216\ \text{m}^3$$

$$\text{Volume per wythe} = 0.0165 \times \frac{49.5}{2} = 0.4\ \text{m}^3$$

$$\left[= 0.0000216 \times \frac{49.5}{2} = 0.0163\ \text{m}^3\right]$$

$$\text{Volume for two wythes} = \frac{(0.4)}{(0.3)(1.5)} = 0.8\ \text{cu ft}$$

$$\left[= \frac{(0.0163)(2)}{(0.150)(0.080)} = 0.694\ \text{m}^3\right]$$

$$\text{Mortar required} = (1.25)(1.5)(0.8) = 1.5\ \text{cu ft}$$

$$\left[= (1.25)(1.5)(0.694) = 1.3\ \text{m}^3\right]$$

14–5 CONSTRUCTION PRACTICE

Wind Load on Fresh Masonry

Masonry walls must be designed to safely resist all expected loads, including wind loads, live loads, and earthquakes. When a building is under construction, the building is not yet in its ultimate design condition and also is subject to temporary loads, such as the support requirements during construction. Many failures of masonry walls under construction have occurred as the result of inadequate bracing against wind loads.

The maximum safe height of an unbraced masonry wall under wind pressure may be calculated by equating the overturning moment produced by wind loads equal to the resisting moment provided by the weight of the wall. Referring to Figure 14–23, we will assume the wind blows against the wall (A) for a unit length of wall. The design calculation is based on the fact that the base of the wall may be considered to rotate about point B. Substituting the basic wind pressure, which is the maximum anticipated wind velocity, can be estimated from local weather records and converted to wind loading, Table 14–5. The method of analysis is as follows:

$$\text{Overturning moment } (M_o) = Ph\frac{h}{2} = qh\,\frac{h}{2} = \frac{qh^2}{2}$$

$$\text{Resisting moment } (M_r) = Wx\frac{t}{2} = \gamma xt\frac{t}{2} = \frac{\gamma xt^2}{2}$$

For equilibrium,	$\Sigma M_B = 0$
Hence	$M_o - M_r = 0$
and	$M_o = M_r$
Substituting values	$\frac{qh^2}{2} = \frac{\gamma xt^2}{2}$
	$h = \frac{t\sqrt{\gamma x}}{\sqrt{q}}$ (14–21)

where q = wind force, psf (kPa)
M_o = overturning moment
h = surface height, ft (m)
t = wall thickness, in (mm)
γ = weight of masonry, pcf (kN/m³)
x = resultant wind force, lb (kN)
P = resultant wind force, lb (kN)
W = resultant weight, lb (kN)

Typical values for the weight of masonry walls per unit of thickness are given in Table 14–4. Note that this analysis does not include any specific factor of safety. However, it does include a factor of safety provided by the partially or more in practice, since the wind pressure and weight factors of safety are given in actual values.

The proper bracing of a masonry wall under construction is illustrated in Figure 14–24. Shores, braces, and ties must not be removed until the mortar has

Figure 14-23
Analysis of forces on
[illegible] masonry wall

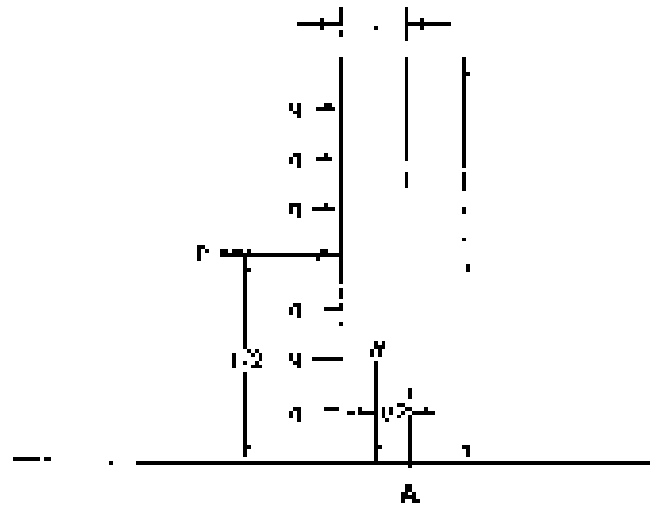

Table 14-3 Design wind [illegible]

Wind Velocity		Design Wind Load*	
mph	km/h	psf	kPa
[illegible]	[illegible]	[illegible]	[illegible]
[illegible]	[illegible]	[illegible]	[illegible]
70	112	[illegible]	[illegible]
80	128	[illegible]	[illegible]
[illegible]	[illegible]	[illegible]	[illegible]
100	161	[illegible]	[illegible]
[illegible]	177	[illegible]	[illegible]
[illegible]	[illegible]	[illegible]	[illegible]
[illegible]	[illegible]	[illegible]	[illegible]

*[illegible]

[illegible] sufficient strength to carry all construction loads. [illegible] by applying the necessary value of column until it [illegible]

EXAMPLE 14-3

Find the maximum [illegible] height in [illegible] [illegible] strength [illegible] the maximum [illegible] wind velocity [illegible] mph.

Table 10–4 Typical unit weights for masonry walls

Type of Wall	Weight per Unit of Wall Surface	
	lb/ft²	kN/m²
Heavyweight concrete block		
4 in. (10 cm)	30	1.56
6 in. (15 cm)	46	2.17
8 in. (20 cm)	55	2.62
12 in. (30 cm)	80	3.83
Lightweight concrete block		
4 in. (10 cm)	21	1.01
6 in. (15 cm)	30	1.44
8 in. (20 cm)	38	1.82
12 in. (30 cm)	55	2.75
Brick (solid)		
4 in. (10 cm)	40	1.92
6 in. (15 cm)	60	2.87
8 in. (20 cm)	80	3.83
12 in. (30 cm)	120	5.75

Figure 10–24 Knocking out a concrete masonry wall under construction. (Courtesy of Portland Cement Association)

SOLUTION

$$k_1 = \frac{[illegible]}{[illegible]} \quad (Eq. [illegible])$$

$$d = [illegible] \text{ (Table 14-4)}$$

$$t = 8/12 \text{ ft } (0.70 \text{ m})$$

$$\sigma = [illegible] \text{ (Table 14-3)}$$

$$F_1 = \frac{[illegible]}{6} = [illegible]$$

$$\left[\frac{[illegible]}{[illegible]} = [illegible] \text{ m} \right]$$

Masonry Materials

[illegible] and well graded in accordance with [illegible]. The best mortar workability is obtained when the sand and lime particles of all sizes [illegible] result in a [illegible] good workability [illegible] high porosity. Masonry [illegible] that has stiffened from evaporation may be [illegible] by adding additional water and retempering. However, to avoid the possibility of using mortar that has stiffened due to plant or [illegible] after initial mixing.

Placing Masonry and Reinforcement

[illegible] water per [illegible] should be wetted before being [illegible] concrete described [illegible]. However, such bricks should be stored [illegible] dry [illegible] in a [illegible] condition when laid.

Masonry units should be laid with joints of the [illegible] width. Brick should be laid with [illegible] joints. In general, concrete blocks may be laid with [illegible] mortar by dipping or [illegible] adding [illegible] as shown in Figure [illegible]. However, for [illegible] masonry, mortar should be used for [illegible] joints and to fill [illegible] and bearing areas. Bricks and [illegible] units should be carefully compacted with a [illegible] after [illegible] mortar has [illegible] to provide maximum [illegible]. Maximum [illegible] thickness for brick masonry specified by the [illegible] are [illegible] and [illegible] (3 mm and [illegible]). [illegible] variation of [illegible] in 20 ft. [illegible] from the plan position of [illegible] in 10 ft

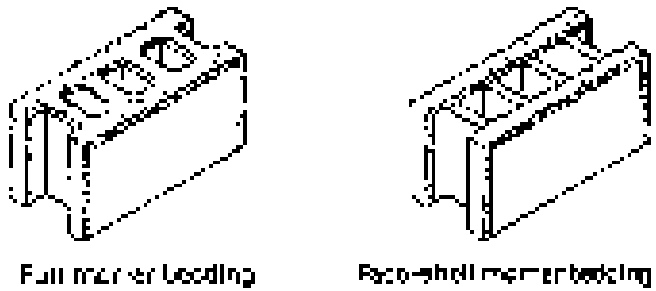

Figure 14–25 Mortar bedding of concrete blocks. (Courtesy of Portland Cement Association)

[illegible] and variation in section thickness of [illegible] in. (19 mm) to [illegible] in. (13 mm) for bending steel must be protected by the minimum thickness of cover shown in Table 14–[illegible]. Masonry reinforcement in accordance with [illegible] and bar diameter should have a minimum nominal cover of [illegible] in. (20 mm) on exterior faces and [illegible] in. (13 mm) on interior faces. The type of reinforcement should be specified based on the [illegible] and spacing of bars in accordance with the design requirements.

Bonding Masonry

Adequate bonding must be provided where masonry units intersect, between the wythes of solid walls or multiple wythe walls, and between masonry units and concrete. Bonding may be provided by masonry bonding units, metal ties, or metal reinforcement, or by bond or header type masonry units or combinations of these, as specified by the design or construction material. Care must also be exercised to ensure that expansion joints are properly filled with expansion material and kept clean of mortar and other solid materials.

Mortar joints in a filled masonry [illegible] are [illegible] and [illegible]. It may also be necessary [illegible] mortar joints [illegible] to be [illegible] from [illegible] and [illegible] wythes and [illegible] in [illegible] and bond by the mortar joints [illegible] placed in the hollow cores of masonry units. [illegible] consistency [illegible] to prevent [illegible] and [illegible] fill [illegible] capable of [illegible]. [illegible] masonry units. The [illegible] for protecting grout [illegible] and weather conditions may differ from those described for masonry construction. However, below temperatures of [illegible] °F (4 °C), [illegible] should be protected by insulation, blankets, or heated enclosures for [illegible] hours after placement. Refer to [illegible] for more [illegible].

Weather Protection

[illegible] masonry units [illegible] specified moisture content [illegible]. After drying, they should [illegible] of the grout and protected from [illegible]. The top of [illegible] and [illegible] masonry [illegible] should be protected from [illegible] by covering

[illegible]

[illegible]

[illegible]

The precautions for placing masonry units in cold weather are similar to those discussed in Chapter 17 for placing concrete. When masonry units are to be placed in air temperatures below 40°F (4°C), the requirements of Informative A and B should be followed. Some maximum cold and weather construction specifications are shown below.

Placing Masonry Units

- Do not place masonry units [illegible] water, the mortar must be [illegible] for bond.
- Heat water and aggregate to obtain a mortar temperature of 40°F (120°F [illegible]) [illegible] the mortar temperature at the time of mixing [illegible] 40°F (4°C).
- The use of admixtures are to lower the mortar freezing point is not recommended. However, a mortar admixture or accelerator may be used in the mortar to prevent freezing long enough to develop sufficient strength to resist freezing. [illegible] accelerator [illegible] requirements for selecting masonry units [illegible] and the time required for penetration.
- Do not place units on a frozen bed, since proper bond [illegible] between the bed mortar and the [illegible] surface. If masonry units are [illegible] surface by [illegible] heat. [illegible] masonry units.
- For air temperatures below 40°F (4°C), [illegible] temperature [illegible] freezing, [illegible].

Protecting New Construction

- Protect newly laid masonry by covering it with a waterproof [illegible] when temperatures are [illegible] 32°F (0°C).
- For air temperatures [illegible] 32°F (0°C) [illegible] protection [illegible] for at least 24 h.

The durability of unreinforced masonry panels during freeze-thaw cycles has been evaluated in laboratory tests sponsored by the Brick Institute of America. Tests on Florida [illegible] and Type S mortar showed little or no damage after 300 freeze-thaw cycles. However, masonry panels constructed with the same brick and Type S mortar showed little or no damage after 300 freeze-thaw cycles, but suffered severe damage after 300 cycles.

PROBLEMS

1. Compute the minimum [illegible] 92 × 8 in. (203 × 57 [illegible] 203-mm) brick is required for a double wythe wall 8 [illegible] high × 30 ft wide (2.4 × 9.14 m) subjected to a uniform [illegible] 4 × 72 in. (1220 × 1830 mm) [illegible] openings. Wind pressure is 30 psf (1.45 kPa). Assume the brick weighs [illegible] 120 pcf (18.9 kN/m³). Assume the brick weighs [illegible]
2. [illegible] construction to place a 50-ft (15.2-m) [illegible] building is [illegible] within [illegible] 30.5 m). The wall is [illegible] high with [illegible] openings 30 × 80 in. (914 × 2032 mm) and is to support 30 × [illegible] in. (762 × [illegible] mm). The brick is [illegible] 2.25 × 3.75 × 7.5 in. (57 × 95 × 190 mm) and weighs [illegible] 120 pcf (18.9 kN/m³).
3. [illegible]
4. a. Describe how a masonry wall should be stored at a construction site.
   b. Why and how should masonry walls be protected before the roofing and floor is in place?
5. What is the minimum [illegible] required in a No. 5 reinforcing bar located near the [illegible] face of a reinforced concrete masonry wall [illegible]?
6. Determine the [illegible] required for the brick wall of Problem 1 if the wind load [illegible] 30 psf (1.45 kPa). Assume [illegible] under [illegible]
7. [illegible] the maximum [illegible] of a [illegible] (150 mm) [illegible] wall if the design wind load is [illegible] (1.45 kPa).
8. [illegible] the [illegible] reinforcing [illegible] wall shown in Figure [illegible] be [illegible]?
9. How long after initial mixing [illegible] masonry mortar be discarded?
10. Develop a computer program to calculate the maximum safe weight of an unreinforced masonry wall under [illegible] temperature [illegible] Table 4–2. Solve Problem 7 using your program.

REFERENCES

1. [illegible]

2. [illegible]
3. [illegible]
4. [illegible]
5. [illegible]
6. [illegible]
7. [illegible]

15

Steel Construction

15-1 INTRODUCTION

Elements of Steel Construction

Structural steel construction is a specialized process usually carried out by special purpose contractors. However, many people, including architects and engineers, need to know the principles and procedures involved. The process of steel construction can be broken down into three major elements of structural planning, steel fabrication and delivery to the job site and erection operations. Each of these elements involves many mechanical operations which are described in this chapter.

For large or complex projects, advanced planning is vital to overcoming the problems of planning, shipping and erection processes. Advanced planning is the process of developing a construction plan involving all the parties involved in the fabrication and delivery of structural steel for a project. Since developing information for the plan involves the contractor, it is not a performance specification for the steel fabricator or the erector. When starting steel construction, preliminary decisions on the size and weight of large components must be checked against plant capacity, transportation limitations and weight limits, and the capacity of construction equipment. In starting construction procedures, the type of foundation is reviewed and the procedures of a full-scale construction cycle are considered. The type of structure being erected and the site conditions limit equipment, standard equipment, and field connections are described in considerable detail in the rest of this chapter.

Field Operations

Field operations involve receiving and unloading, storing, preparing, erecting, plumbing, aligning, and connecting the steel. The process of unloading involves the use of equipment and the moving it from storage to the point of erection. Structural steel members are seldom carelessly handled, dropped, or dragged at the job site. Heavy use of heavy equipment and standard equipment will cause disruption to the manner

Table 15-8 [illegible] mill tolerances for steel members

Dimensions	Tolerances
Depth	[illegible] in. (3.32 cm)
Width	[illegible]
Flange out-of-squareness	
Depth 12 in. (30 cm) or less	[illegible] (0.24 cm)
Depth over 12 in. (30 cm)	[illegible] (0.79 cm)
Accumulated rolling	[illegible]
Length	
Distance for cutting	[illegible] in. (0.95 cm)
Compression members	
Length 30 ft (9.2 m) or less	[illegible] (0.18 cm)
Length over 40 ft (12.2 m)	[illegible] in. (0.32 cm)
Flange out-of-squareness	[illegible]
Straightness	
Beams	[illegible] (0.1 cm) [illegible]
Compression members	[illegible]

and damage to its coating. Such precautions are particularly important when handling long flexible members and members with slender cross sections. Care should be taken to avoid bending the members. If [illegible] inspection [illegible] the steel is in good condition, it should be inspected after unloading for evidence of damage. Steel [illegible] specified in Table 15-8. [illegible] members should be checked [illegible] for possible shipping and unloading damage.

[illegible] the process of erecting a structure by assembling components, and stabilizing it in such a manner that it can resist gravity and lateral loading conditions. Code provisions are [illegible] to facilitate a safe and efficient erection process. Steel should be stored off the ground on [illegible] supports, and protected from [illegible] and damage. Erection, as the final element of the design process, is described in Section 15-[illegible].

15-2 STRUCTURAL STEEL

Types of Steel

The types of steel contained in a structural steel member are designated by the letter A followed by the American Society for Testing and Materials (ASTM) specification number. The structural types of steel commonly used include:

- ASTM Carbon Structural Steel.

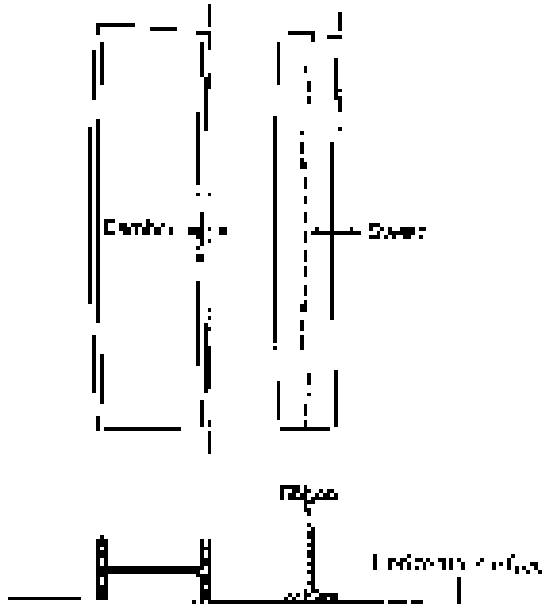

Figure 1.5–1 Camber and sweep of beams.

- A572 High-Strength Low-Alloy Structural Steel.
- A588 Corrosion-Resistant High-Strength Low-Alloy Structural Steel.

and strength is designated by the symbol F_y, which represents the minimum yield point of the steel in pounds per square inch (ksi), or kilopascals per square millimeter (MPa). Grade A36 steel has yield strength of 36 ksi (248 MPa), or 250 N/mm². The high-strength steel types A572 and A588 are available in yield strengths of 42 ksi (290 MPa), 50 ksi (345 MPa), 60 ksi (414 MPa), 65 ksi (448 MPa).

Weathering steel is specified for structures where relative maintenance is a concern. Upon exposure to the elements, a tight, protective oxide coat forms on the surface, which inhibits further corrosion. This material is considered for structures such as bridges, as well as buildings. However, some problems have occurred with the use of weathering steel in environments which are hostile to the integrity of the protective oxide coat, such as those in which water from the weathering steel drains onto other structural members.

Standard Rolled Shapes

There are a number of rolled steel shapes available, from which a structure may be built. These are standardized by the American Institute of Steel Construction. Figure 1.5–2 illustrates four major section shapes. A brief description of these shapes and their AISC designations is given in Table 1.5–1. Note that the usual designation includes a letter symbol identifying the section shape followed by two numbers indicating the section depth in inches and the weight per foot. Designations for angles, tees, and plates are slightly different, in that

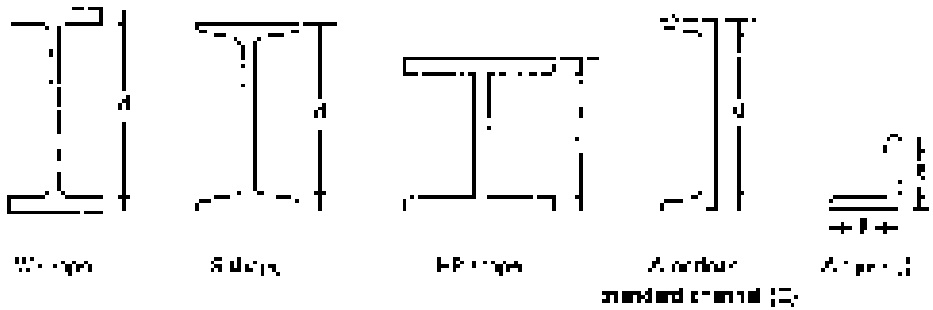

Figure 15–2 Rolled-steel section shapes.

Table 15–2 Rolled steel shape designations

Type of Shape	Example Designation
W shape	W27 × 114
S shape	S20 × 65
M shape	M6 × 20
American Standard Channel	C12 × 20
Miscellaneous Channel	MC12 × 50
HP (bearing pile) shape	HP14 × 89
Structural tee cut from	WT9 × 60
Structural tee cut from	ST6 × 25
Structural tee cut from	MT4 × 18.5
Angle	L6 × 4 × ½
Double angle	2L6 × 4 × ½
Structural tee cut from	WT9 × 60
Structural tee cut from	ST6 × 25
Structural tee cut from	MT4 × 18.5
Plate	PL ½ × 12
Round bar	Bar ½ ϕ
Square bar	Bar ½ × ½
Pipe	Pipe 6 std.
Structural tubing:	
Square	Sq. 5 × 5 × .250
Rectangular	Rect. 8 × 4 × .250
Round	Rd. 6 × .250

the numbers most identify principal section dimensions in inches, rather than the section depth and weight. Dimensional designations such as the weight of pipe, plate, or round bar will be given in pounds per foot.

Built-Up Members

Occasionally, you may need to use shapes that are too large or too heavy to provide the required section properties. For example, in Figure 15–3a, consider a column of a very tall

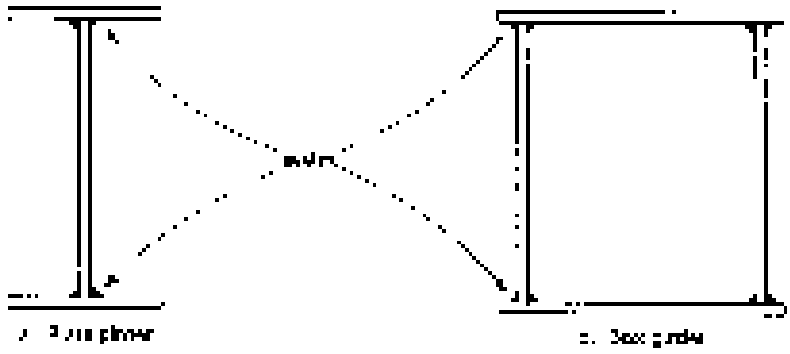

Figure 15.3 Built-up steel members

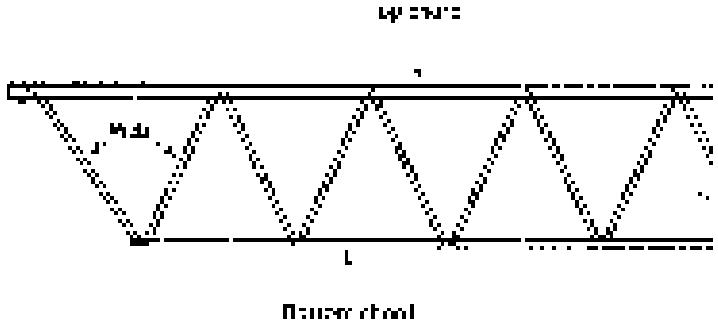

Figure 15-4 Open web steel joist

[illegible] Purlins may be added [illegible] joists [illegible] are connected using [illegible] as shown in Figure [illegible].

Open web steel joists (Figure [illegible]) are [illegible] steel members. These are [illegible] [illegible] steel joists. [illegible] [illegible] [illegible]

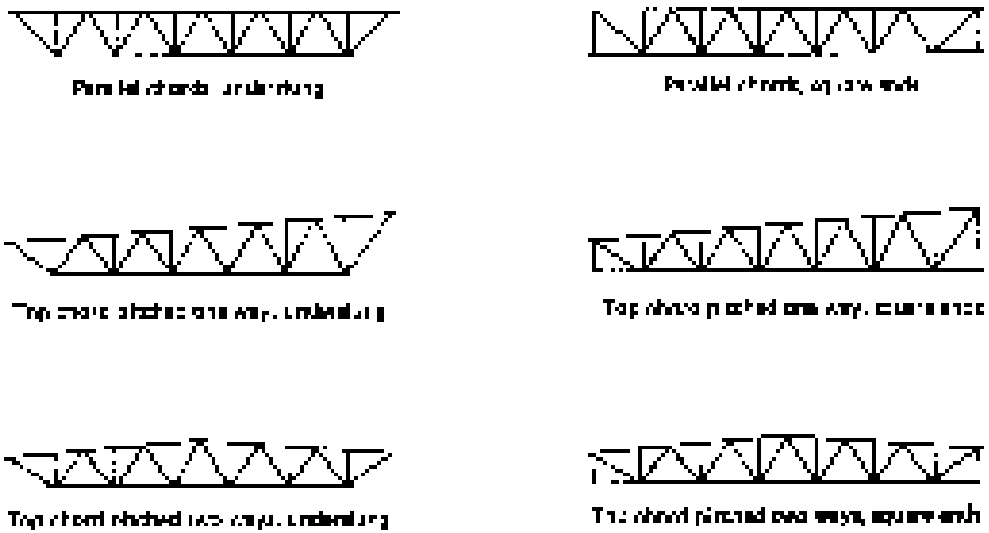

Figure 15–5 Truss shapes.

[illegible] (218 [illegible]). When spacing [illegible] 8.3 [illegible] maximum depth of 24 in (610 mm), 1-in-thick [illegible] web steel joists [illegible] the [illegible] and [illegible] as shown in Figure [illegible].

Open-web steel joists are produced from [illegible] standard shapes [illegible] and then joining them as [illegible] the shape shown in Figure [illegible]. [illegible] such as these are [illegible] and are [illegible] called set [illegible]. The [illegible] of the web members [illegible] and linking utilities.

15–3 STEEL ERECTION

Erection Procedure

The usual steel erection procedure [illegible] erection crew [illegible] the [illegible] which [illegible] sequence [illegible]. The [illegible] steel members from position and make temporary or permanent connections that will take the [illegible] safely [illegible] the [illegible] integrity [illegible] safely [illegible] during erection [illegible] specific safety measures to ensure [illegible] injuries. For [illegible] the erection [illegible] permanent floor. [illegible] the [illegible] per [illegible] complete [illegible] properly [illegible] to be [illegible] final connections [illegible] the floor [illegible] the [illegible] specifications requirements.

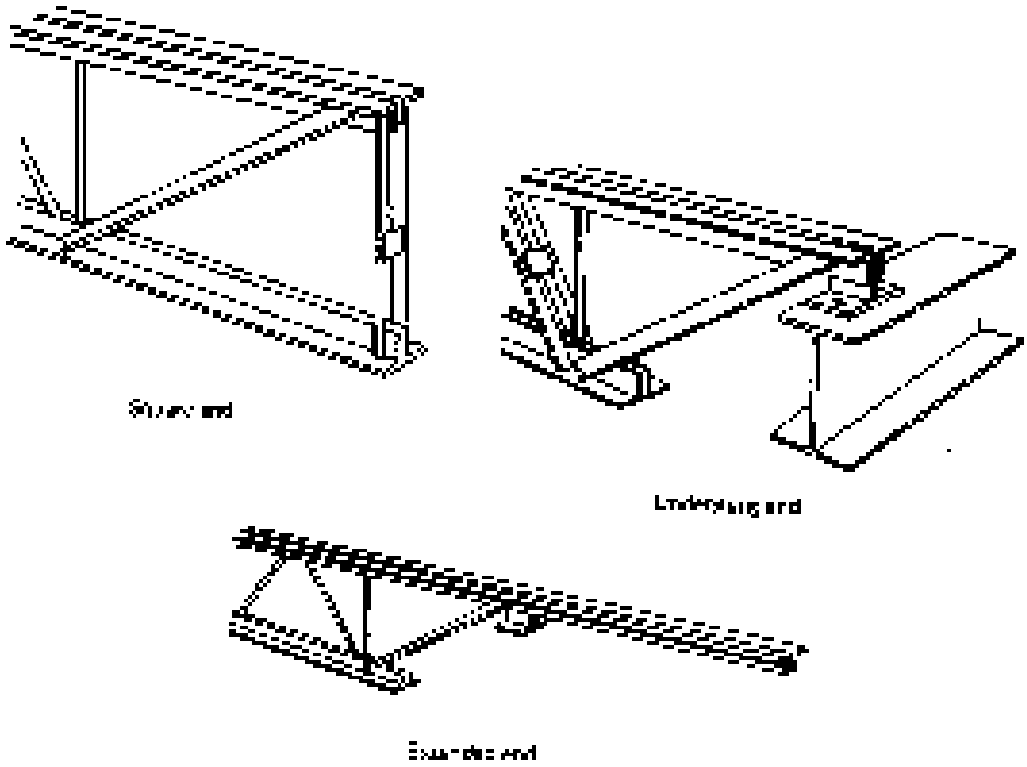

Figure 15-6 Types of plastic [illegible]

Figure 15-7 [illegible] (Courtesy of American Institute of Steel Construction)

Figure 15-8 Tower crane erecting steel. (Courtesy of [illegible])

Lifting Equipment

The mobility [illegible] described in Chapter [illegible] [illegible] lifting [illegible] Figure 15-8 shows a [illegible] tower. [illegible] The [illegible] Figure [illegible] is one of the simplest types of powered lifting devices. [illegible] lifting [illegible] in lift [illegible] of equipment such as boilers or tanks. A typical [illegible] Figure [illegible]. This is probably the most [illegible] lifting device in high-rise building construction. An advantage of the pulley device is that [illegible] proceeds. Figure 15-9 illustrates a [illegible] called a [illegible] [illegible] moment within [illegible].

Alignment of Steel

[illegible] AISC Code of Standard Practice [illegible] AISC standards [illegible] [illegible]

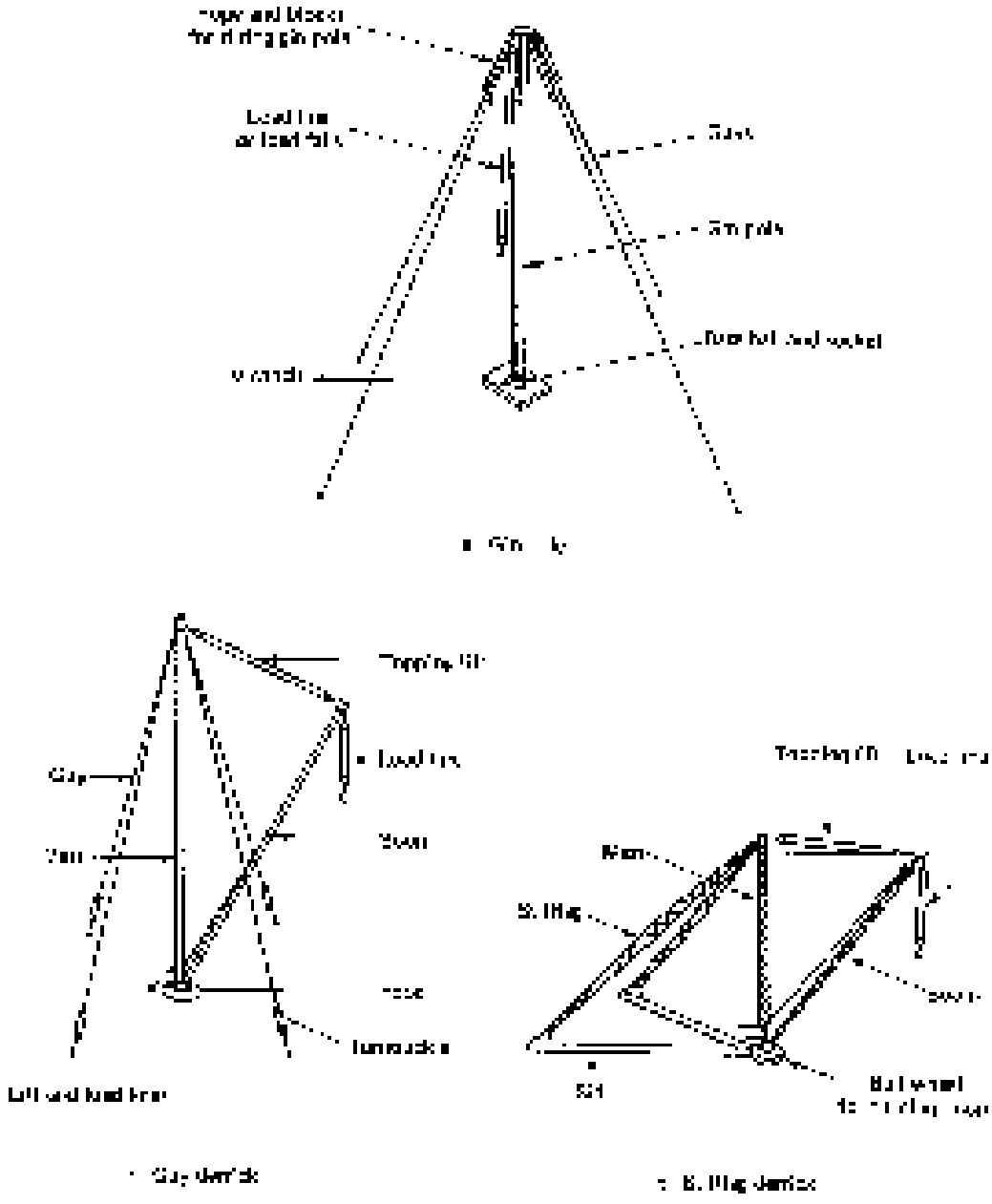

Figure 13.9 [illegible]

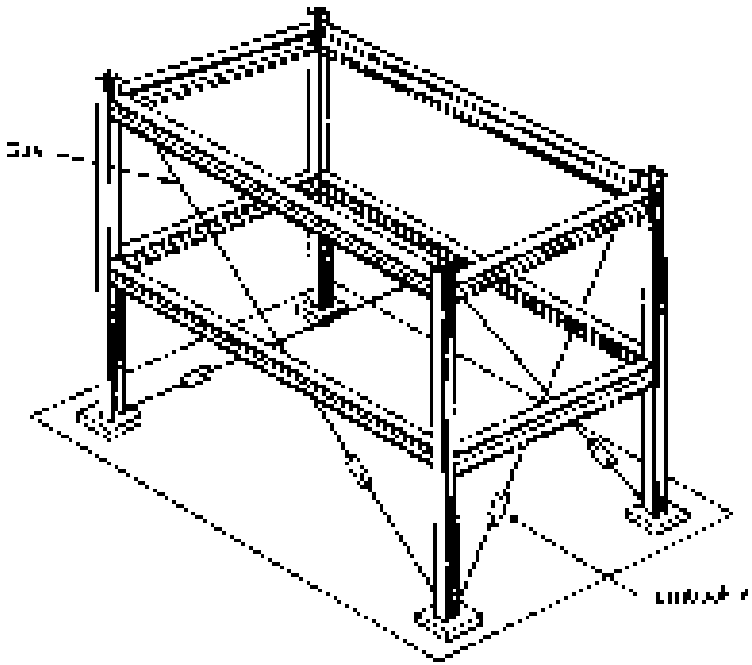

Figure 16.10 Flooring systems and structures.

The minimum overall lots and steel members is to specify [illegible] in reference [illegible] Copying or dividing in the same [illegible] which [illegible] beams to prevent the [illegible] [illegible] can be [illegible] [illegible] [illegible]

15–4 FIELD CONNECTIONS

Fastening Systems

The three principal systems used for connecting structural members are bolting, riveting, and welding. Riveting is now seldom used for making field connections in new construction. Riveting practices will not be described here.

Bolted Connections

While unfinished ASTM A307 bolts are still available for minor steel applications, high-strength bolts are used in most bolted steel construction. To avoid confusion between the two, ASTM has given special designations for high-strength bolts, which are illustrated in Figure 15–11. Both the nut and bolt are impressed with a mark identifying the manufacturer, the grade, and the mark of the manufacturer. Bolts are made of quenched and tempered medium carbon steel. Bolts are furnished with a washer under the head and under the nut. Washers are required to provide a bearing surface for the nut and to prevent damage to the surface of the material being fastened. Washers are also required when the material being fastened is of a specified hardness or when oversized holes are used.

The Specifications for Structural Joints Using ASTM A325 or A490 Bolts, approved by the Research Council on Riveted and Bolted Structural Joints, and adopted by AISC, has prescribed acceptable procedures for assembling structural joints using high-strength bolts (see Chapter 8). These procedures are described briefly in the remainder of this section. Two of the methods used for tightening the bolts to the specified tension are the turn-of-nut method and the calibrated wrench method.

Quality control procedures may require the use of a torque wrench to verify that the required bolt tension has been achieved. When used, torque wrenches should be calibrated with a load-measuring device at least once a day by tightening a bolt, washer, and nut, exactly as they will be used in the structure, in a tension calibrator. A torque wrench with a dial or other indicator is used to check the torque required for a specified bolt tension. The torque wrench is then used to tighten the bolts and finally to inspect or check the tension of some bolts that have been tightened by other methods. Torque wrenches should be set to produce a specified tension. The specified minimum bolt tension for pressure-type joints is used for bolts in joints where slip is critical. Slip-critical joints are those in which the bolts are tightened to a specified tension to prevent slippage of the connected parts under service loads. The specified minimum bolt tension is 70% of the specified minimum tensile strength of the bolt, or approximately 35 kips for a 3/4-in. A325 bolt and 44 kips for a 3/4-in. A490 bolt.

When tightening a high-strength bolt by either the turn-of-nut method or the calibrated wrench method, the bolt is first brought to a snug condition. A snug condition is normally achieved in bolts with hardened washers by the impact of a few blows of an impact wrench or by the full effort of a man using an ordinary spud wrench. A snug condition for a bolt in a slip-critical joint may be accomplished by tightening either the nut or the bolt head. Control presents no problem when bolts are tightened in place during erection. When the surface to which the bolt head is applied is inclined at a slope greater than 1:20 from a plane perpendicular to the bolt axis, a beveled washer must be used to provide for bearing on the nut or bolt head. Bolts are then tightened to the calibrated wrench tightening method, and A490 bolts installed by this method must have a hardened washer under the element turning to avoid damage to the material. Hardened washers must be used under both the nut and the bolt head when used to connect material having a yield strength of less than 40 ksi. For ease and efficiency in the turn-of-nut method, the nut, the bolt, or the material in which the

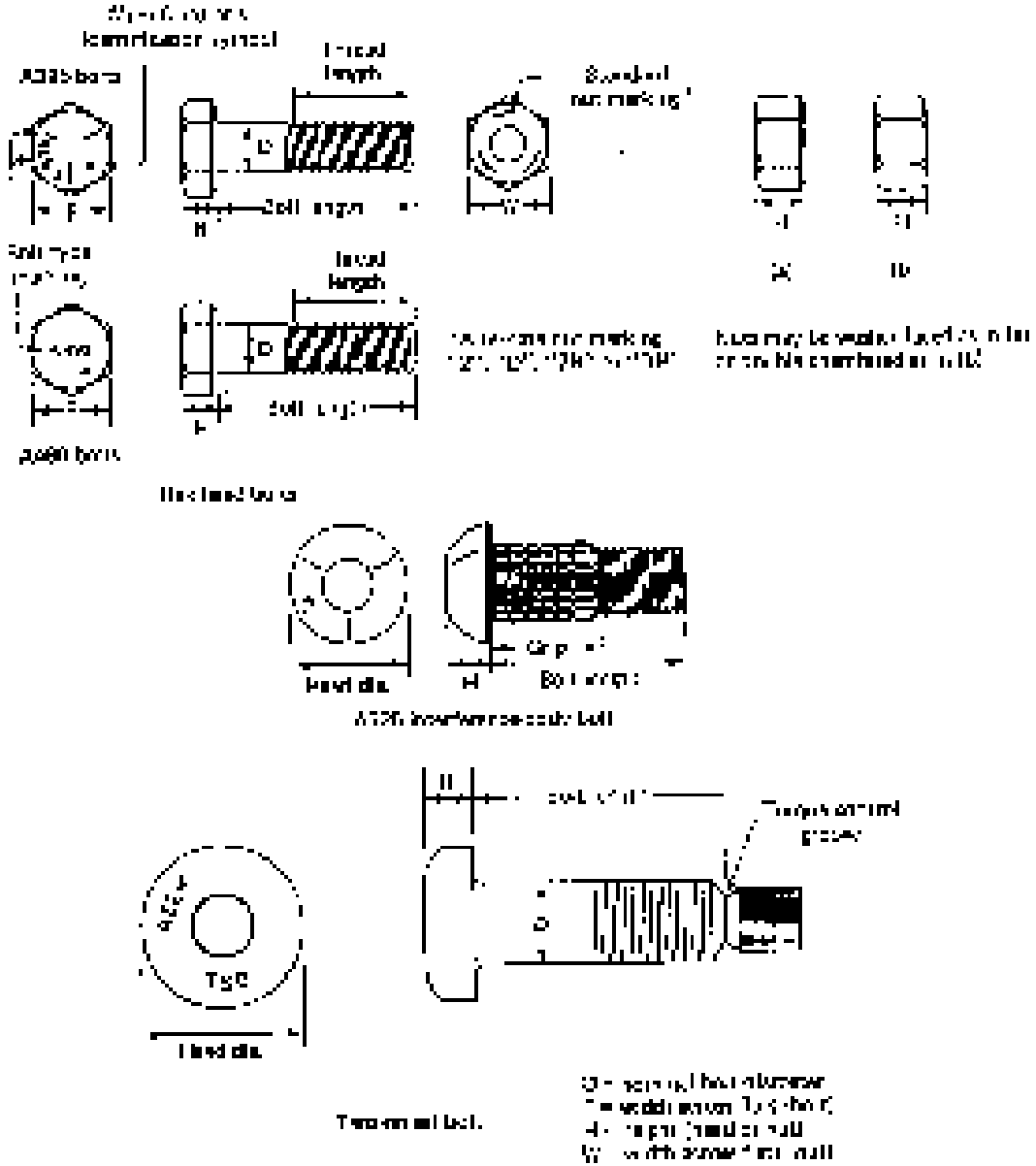

Figure 3.3–11 Unfinished steel bolts

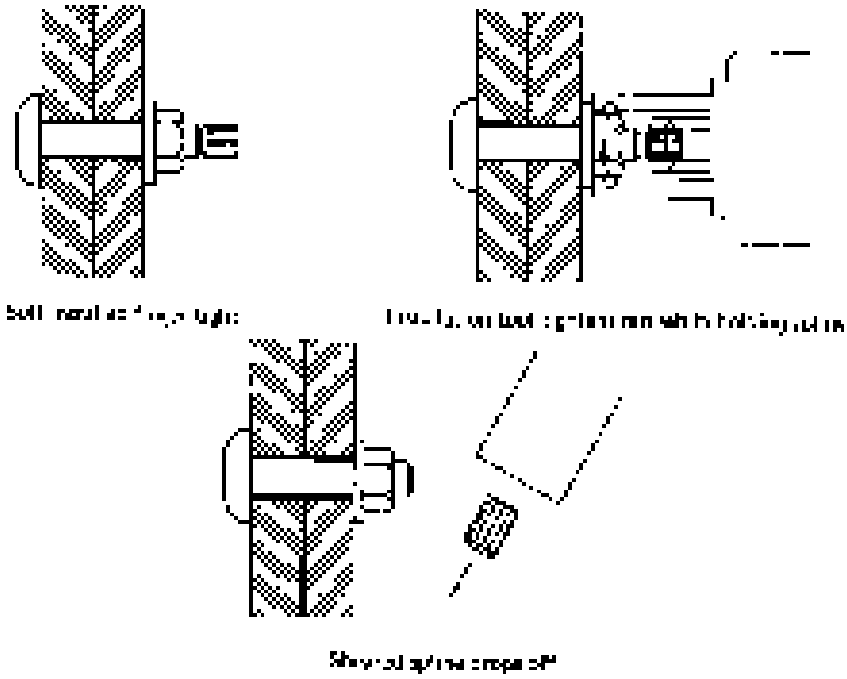

Figure 15-12 Installation of tension control bolts.

compressed vertical cutoff. Flange or tension control bolts installed, the spline or torque-wrench obtained from the design condition will be a stationary nut (not head) on the tension control bolt shown to prevent rotation. The tightening sequence for a bolt not more than 5 diameters long (5 in. or 127 mm) or 12 diameters long (12 in. or 305 mm) is one half turn from snug condition.

The procedure for tightening tension control bolts is illustrated in Figure 15-12. After bolts have been installed in groups, the installation tool is positioned on the first bolt to be tightened and the torque wrench. The wrench is used below the bolt square to prevent the bolt from rotating while torque is applied to the nut. When the torque is reached, the wrench will release automatically. Then the torque control gauge will indicate whether bolts have reached the specified torque. If the deviation that is optimum of the bolts is not [illegible] desired, bolts may be verified by the use of a calibrated torque wrench, as described in the previous paragraph.

Welded Connections

Welding (Figure 15-13) is the specialized process that cannot be overemphasized properly. It integrates connection strength [illegible] provided. Welding requirements for structural [illegible] are specified in the Manual of the American Welding Society [illegible]. Some of the principal welding requirements are contained in this section. In the United States, welders responsible for making connections in structural construction should

Figure 15-13 Welded steel construction. Courtesy of American Institute of Steel Construction

[illegible]

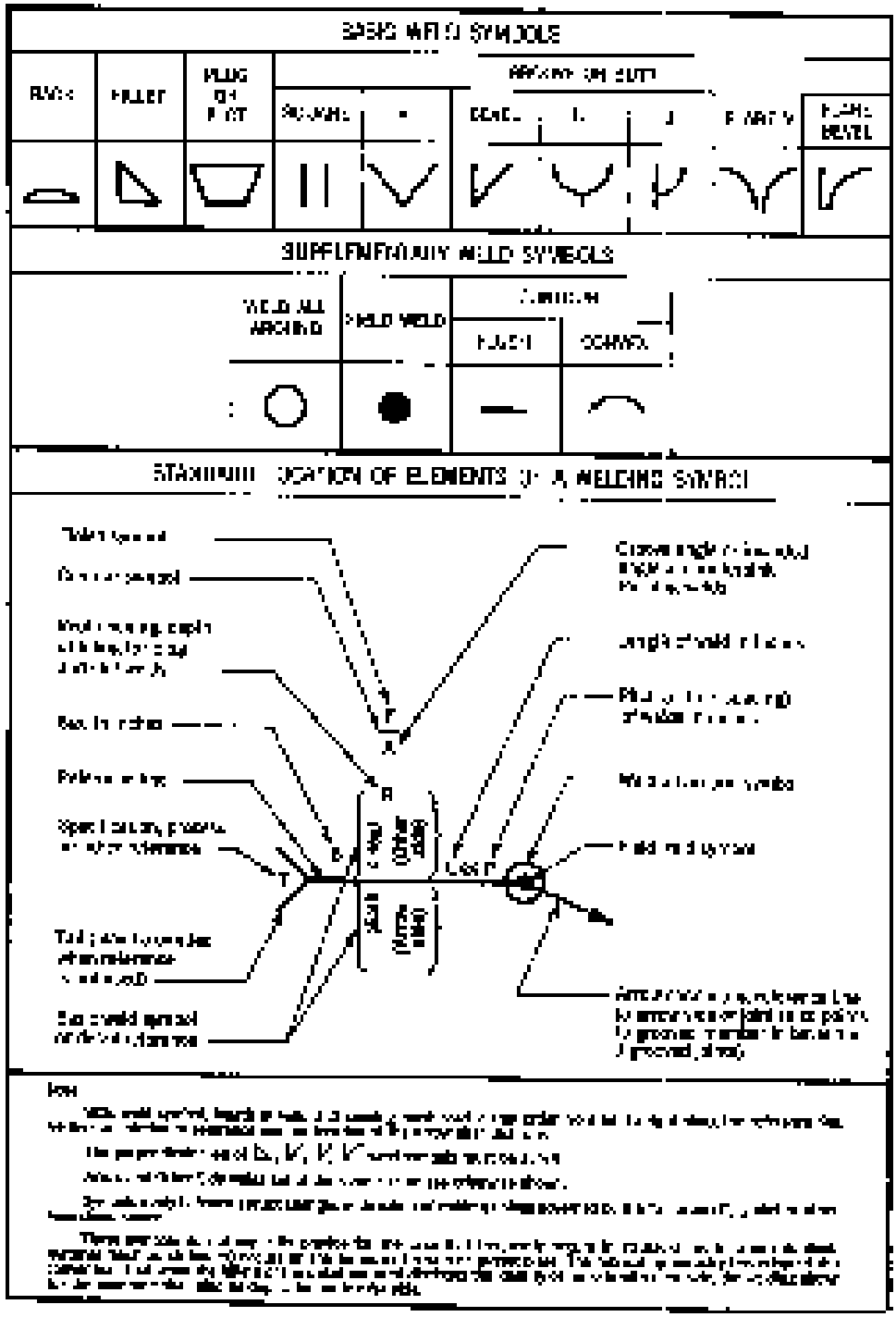

Figure 15-14 Standard welding symbols. (From Key of Symbols, American Institute of Steel Construction.)

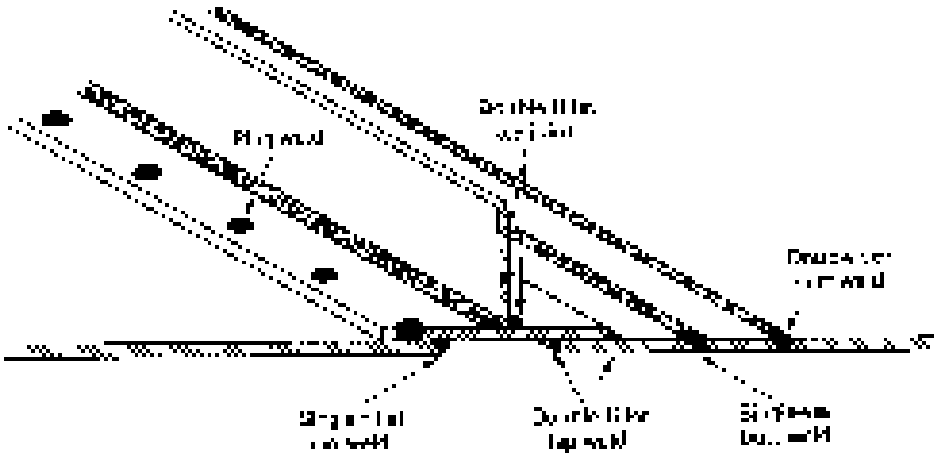

Figure 15-15 Weld types.

15-5 SAFETY

[illegible]

Protective Equipment

[illegible]

Site Hazards

[illegible]

from [illegible] slipping. Wet and dry surfaces are obvious [illegible]. Since [illegible] resistance must be [illegible] so that they are [illegible] and are paint before being [illegible] in place.

PROBLEMS

1. Explain the meaning of [illegible] Moving is used to [illegible] construction.
2. [illegible]
3. Identify the following [illegible]:
   a. [illegible]
   b. [illegible]
   c. [illegible]
   d. [illegible]
4. [illegible]
5. [illegible]
6. [illegible]
7. [illegible]
8. [illegible]
9. [illegible]
10. Develop a [illegible] to provide an inventory of structural steel [illegible] for a [illegible] project. [illegible] should include [illegible] and size, length, quantity, and unit weight. Organization should include [illegible] steel shapes [illegible] as the total weight of steel for the project. Using your [illegible] provide an inventory example.

REFERENCES

1. [illegible] Department of Labor, Washington, D.C.
2. [illegible] Department of Labor, Washington, D.C.
3. [illegible] Chicago, IL [illegible].
4. [illegible] New York [illegible].
5. [illegible] Washington, D.C. [illegible].

PART THREE

Construction Management

16

Planning and Scheduling

16-1 INTRODUCTION

Planning and Scheduling

As you already know, [illegible] planning [illegible] is to perform any function with a minimum of [illegible] and effort. This may mean the function is getting [illegible] work done [illegible] building. And [illegible] planning [illegible] plan. Schedules [illegible] assignment [illegible] performance of [illegible] to provide [illegible] and to avoid completion of [illegible] minimum reasonable time.

Scheduling is [illegible] many [illegible] of the construction process, from [illegible] planning through facility [illegible] operation and maintenance. To be [illegible] a plan is [illegible] a number of [illegible] during [illegible] and [illegible] completion of the project [illegible] construction [illegible]. Some of the [illegible] are [illegible] below.

Before Starting

1. Provide [illegible] of the [illegible] for [illegible] the project as well as [illegible] the [illegible] process.
2. Determine the [illegible] of [illegible].
3. [illegible] for [illegible] to [illegible] deadlines.
4. Determine the [illegible] to the use of [illegible] materials, machines, and money.

During Construction

1. Facilitate [illegible] key [illegible], [illegible], and [illegible].
2. [illegible] monitoring [illegible] of changes and delays.

3. [illegible]
4. [illegible]

After Completion of Construction

1. [illegible]
2. [illegible]

Scheduling Principles

There are many types of different forms of schedules that may be used, including [illegible] schedules, network schedules, and others. In this chapter, we will [illegible] only the graph method, the linear scheduling method. Regardless of the schedule [illegible], the following general principles of scheduling should be observed.

1. [illegible]
2. [illegible]
3. [illegible]
4. [illegible]

[illegible] first the accuracy or validity of scheduling depends [illegible] the work quantity and production rate estimates. The accuracy of the estimate of the time it will take to complete a construction operation or process of the kind of work [illegible] given consideration in the plan and schedule. For example, one expects a more accurate estimate of the time required to install a [illegible] than to install a structural steel [illegible] that is the [illegible] of a [illegible] with [illegible] will be discussed later in this chapter.

In addition to [illegible] forms of scheduling, the plan must have a thorough understanding of the nature of the work to be performed and the relationship between the various work items making up the project. One of the major advantages of the bar graph schedule discussed in the following section is that it [illegible] the [illegible] work items. Thus, [illegible] subtitles must [illegible] employees before [illegible] employees?

16–2 BAR GRAPH METHOD

The Bar Graph Schedule

[illegible] bar graph schedule is a graphic [illegible] progress of [illegible] work [illegible]. The bar graph [illegible] its origin to [illegible] by Henry L. Gantt [illegible] of scientific management methods to industrial production. [illegible] different forms, depending

[illegible] application. Because of their [illegible] graphs [illegible] critical path [illegible] of the [illegible] network planning methods, the [illegible] graph schedule is still the most widely used schedule for [illegible] in construction [illegible] popularity in the [illegible] of the sign [illegible] [illegible] [illegible]

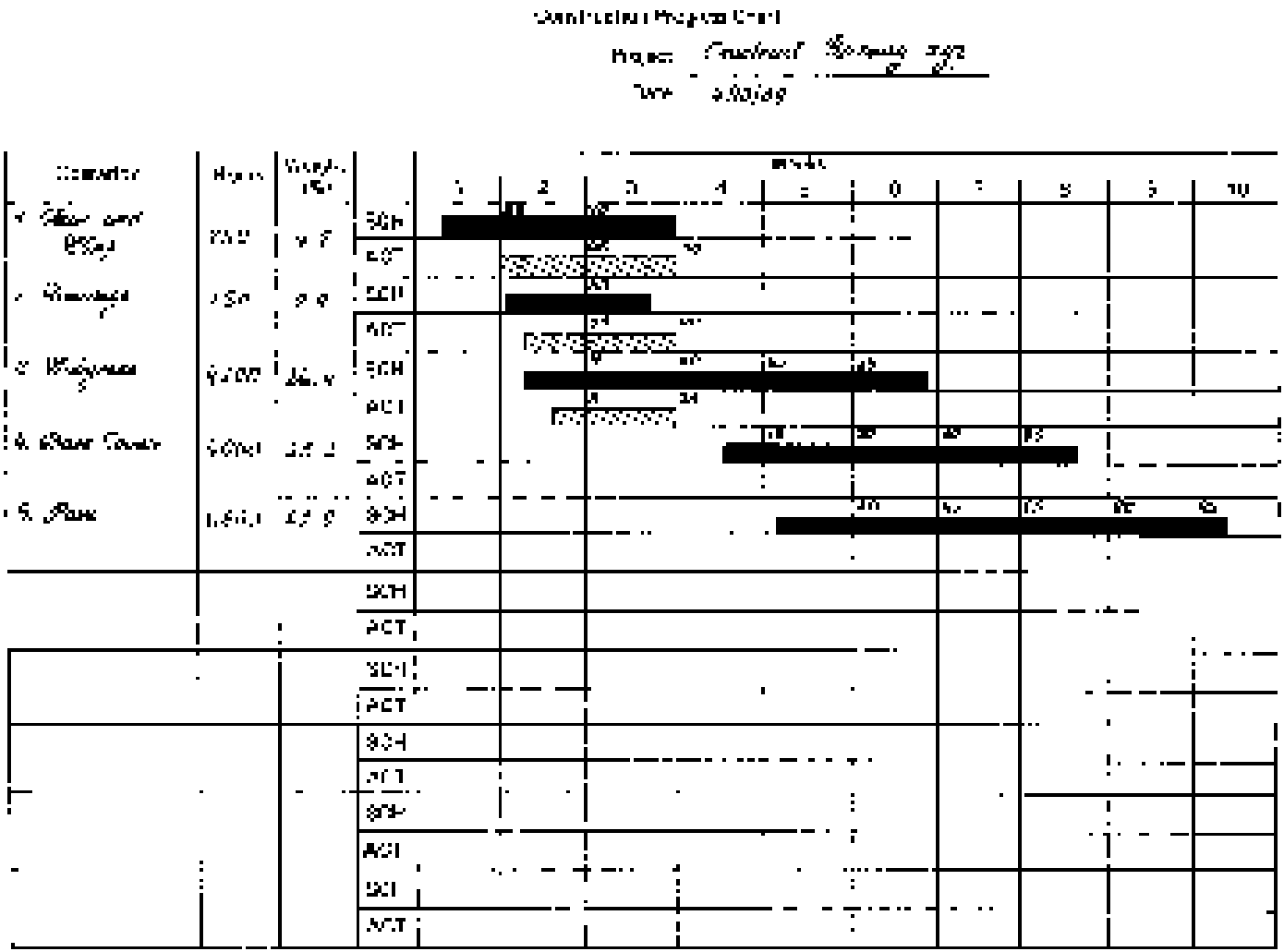

Figure 18–8 Bar graph schedule for construction project

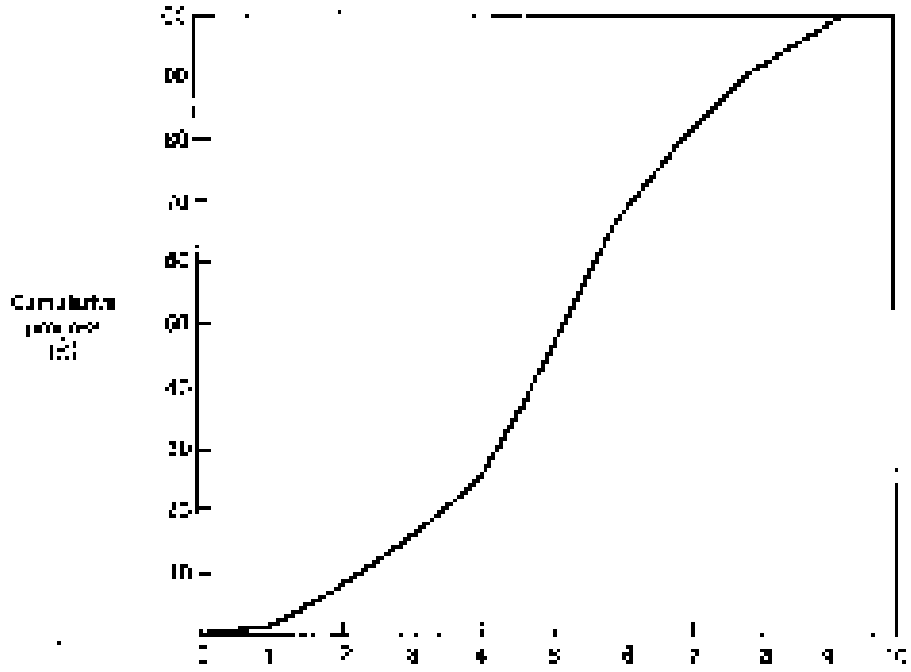

Figure 18-2 Achieved-to-date progress.

End of Second Week

[Activity 1] [Activity 2] [Activity 3]

Progress = (0.70 × 2) + (0.30 × 3.00) + (0.5 × 1.0) = 2.4%

End of Third Week

[Activity 1] [Activity 2] [Activity 3]

Progress = (1.00 × 4.2) + (1.00 × 1.0) + (0.40 × 3.0) = 6.0%

Frequently, in addition to progress curves, the project manager also uses the project schedule and the project cash flow graph which is illustrated in Figure 18-3.

The Normal Progress Curve

A fundamental concept in the planning and control of a project is the normal progress curve. Characteristics of large number of projects indicate that the small stages of the project, as shown in Figure 18-4, and the curve indicates progress is slow at the beginning of the project, as work is organized and workers become familiar with the new assignments and procedures. This, typically, 15% of the project is completed in the first 35% of project time. After this, progress is made at a faster and faster rate until 85% of the work is completed at

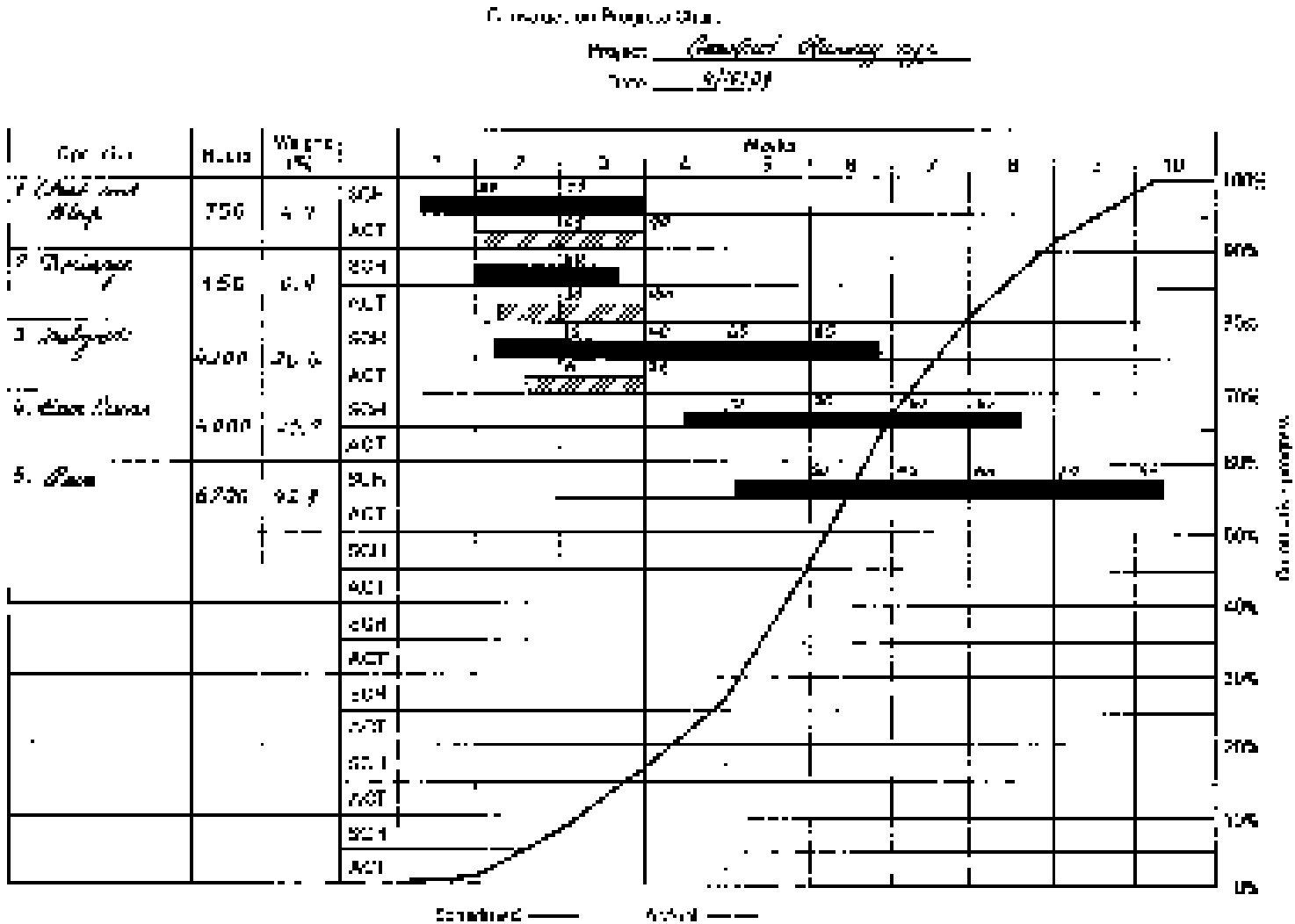

Figure 18–6 Bar graph with cumulative progress curve.

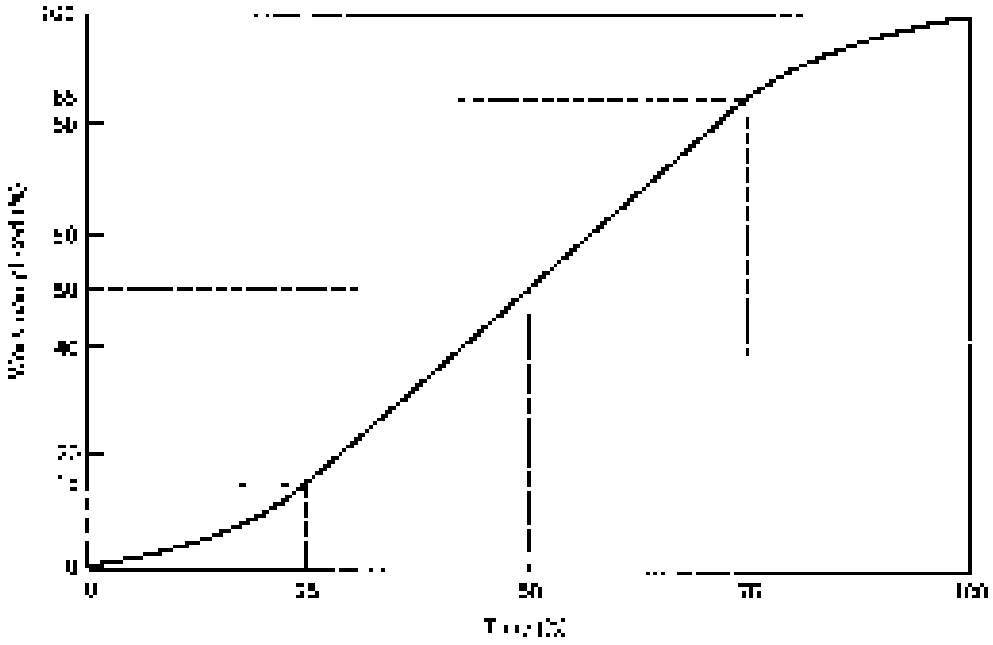

Figure 16-4 Actual progress curve.

[illegible] of project time. Progress gains [illegible] costs and project [illegible] takes place. The progress curve [illegible] in Figure 16-4 [illegible] will seldom [illegible] any type of construction work. If you have [illegible] the slope of the actual curve [illegible] progress curve [illegible] relative to the curve of Figure [illegible] you should [illegible] investigate the reason for the [illegible]. If progress [illegible] the actual curve [illegible] the curve [illegible] simple. Otherwise, [illegible] the planned rate of progress [illegible]

16-3 CPM—THE CRITICAL PATH METHOD

Deficiencies in Bar Graph Schedules

As mentioned earlier, a major deficiency of the bar graph schedule is its inability to show relationships between project activities. [illegible] to determine from a bar graph schedule which activities [illegible] the critical path, [illegible] relationship. A major weakness of the bar graph schedule is its inability to identify the activities which actually control the project duration. We will refer to such activities as controlling activities or critical activities. As a result of its failure to identify activity relationships and critical activities, the bar graph schedule [illegible] the other [illegible]

[illegible]

However, it was not until the mid-period of network planning [illegible] in 1957 to 1958 [illegible] in pure-research [illegible] and scheduling methods [illegible] During this period the [illegible] Dupont and Remington Rand Univac developed the Critical Path Method (CPM) for planning and scheduling plant maintenance and construction projects utilizing computers. At about the same time, the Special Projects Office of the U.S. Navy, with Booz, Allen and Hamilton, was developing the Program Evaluation and Review Technique (PERT) for planning and controlling weapons systems development. Successful applications of both CPM and PERT by their developers led to widespread use of the techniques on both government and commercial projects.

Both CPM and PERT use a network diagram to graphically represent the major activities and events to show the relationships between activities. The major difference between CPM and PERT is that PERT allows probabilistic concepts to be used in estimating activity durations, whereas CPM assumes such activity durations are known with certainty.

The Network Diagram

As indicated, a network is a graphical portrayal of a project's activities and their interrelationships. There are currently two main styles of drawing such networks: the activity-on-arrow diagram and the activity-on-node diagram. Several forms of activity-on-node diagrams are discussed in this chapter. While both styles have certain advantages, activity-on-node diagrams are preferred by most practitioners and are used in the remainder of this chapter.

In the activity-on-arrow diagram, each activity is represented by an arrow that leads from a starting event to a finishing event. Each event is illustrated in Figure 16-5 as a circle. Events are numbered in the order in which they are created. Dummy activities are used to show precedence relationships between activities. Dummy activities are shown as dashed arrows. Dummy activities do not consume time or resources. Dummy activities are used to avoid ambiguity when two activities have the same beginning and ending events. For example, activities 2-3 and 2-4 in Figure 16-5 are both preceded by the event 2. Without the dummy activity 2-3, activity 2-4 would be ambiguous because it would be described as 2-3. Dummy activities are also used to ensure that each activity is described by a unique set of beginning and ending events. For example, activity 3-5 would be described as 2-3 if the dummy activity 2-3 were not used. Dummy activities are also used to ensure that the network diagram accurately reflects the logic of the project

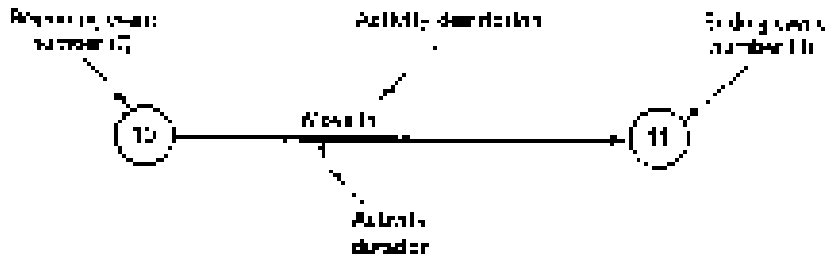

Figure 16–5 Activity-on-a-row notation.

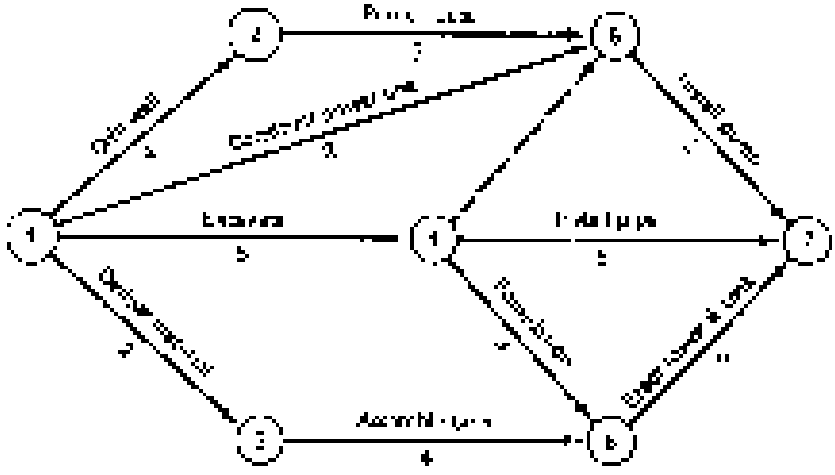

Figure 16–6 Example network diagram.

Consider the network in Figure 16–6. This is called activity-on-arrow or simply a network. Dummies are used to represent zero-duration activities or precedence relationships. They do not consume any work and time, they have a duration of zero.

Event-Time Calculations

Given a network, we can determine the earliest and latest times at which each event may occur based on the durations of the activities. Calculations are made in two passes. The first pass is the calculation of the earliest time at which each event may occur based on the durations of the activities. This is called the forward pass. The second pass is the calculation of the latest time at which each event may occur without causing a delay in the completion of the project. This is called the backward pass. The calculations are made on the network diagram. Calculations begin at the first event, which is assumed to occur at time zero. The earliest time for each event is found by adding the duration of the activity to the earliest time of the preceding event. The earliest event time is the maximum of the earliest times of the preceding events. The latest event time is found by subtracting the duration of the activity from the latest event time of the following event. The latest event time is the minimum of the latest times of the following events.

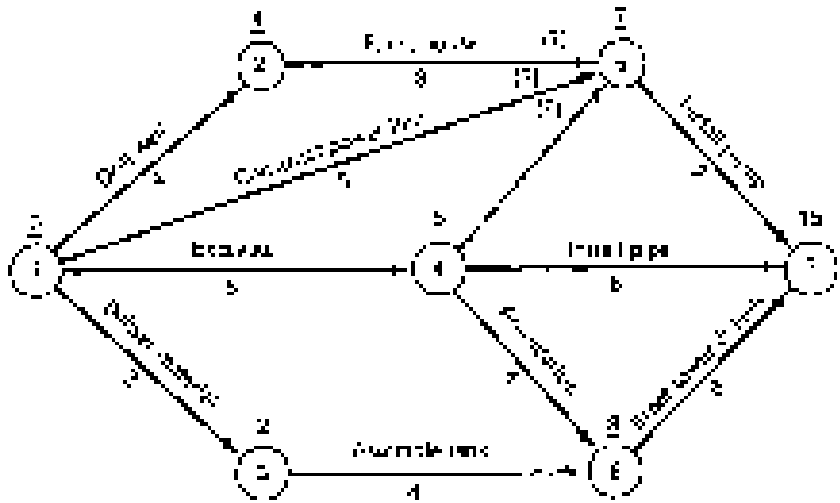

Figure 16-7 Example network: early event times

that represent minimal possible early event times, so they are called early event times. Because, by definition, the event cannot occur until all activities leading into the event have been completed. In Figure 16-7, note the activity early completion times 3, 5, and 7 at event 5, leading to the maximum early event time value of 7. The early event time at the last event is often called the minimum time required for completing the project.

When all the early event times have been computed, the minimum time required for the project is known, we can determine the latest possible time at which each event may occur without causing an increase in the minimum time required for the project. In the case of the last event, the latest possible time of the event coincides with its earliest time. The latest possible time of the last event, which is equal to the minimum time required for the project, is the deadline for completing the project. The network of Figure 16-7 is redrawn in Figure 16-8. The late event times are shown in the lower half of each event. Starting from the deadline of 15, we find the latest possible time of event 7 to be the deadline, 15 − 0 = 15. When two or more activities terminate at an event, the lower of such latest times is the latest event time because, by definition, the event must occur before any activity leading out of the event may start. In order to avoid delays in subsequent activities, within the critical time, the event must occur at the earliest of the possible times. In Figure 16-8, note the possible late event times 14, 13, 11, and 11 leading into event 5.

The Critical Path

The path through the network which exhibits the minimum permissible duration is referred to as the critical path. This path, the sums of zero and negative slacks, is used to determine the project duration, or early event time of the last event, or final node. However, it is usual to work only with early and late event times. Zero slack times are used to identify the critical path. Note in Figure 16-8 that the critical path runs through all events with

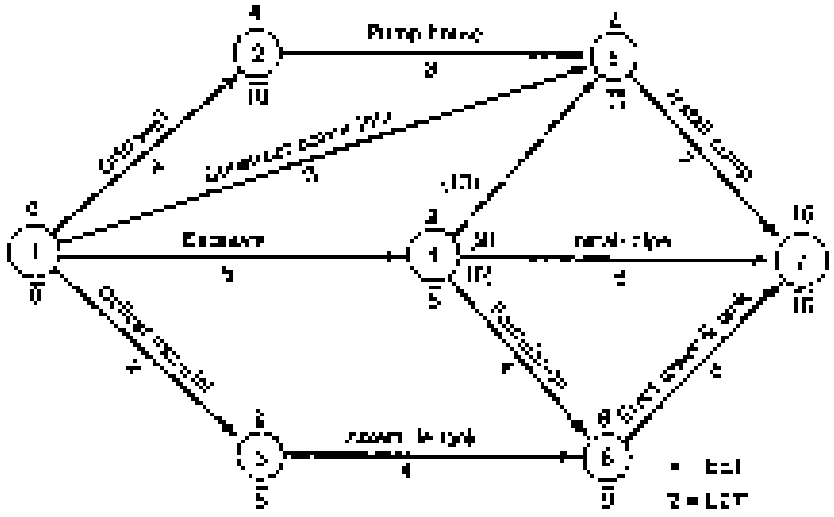

Figure 16-8 Example network—all events times.

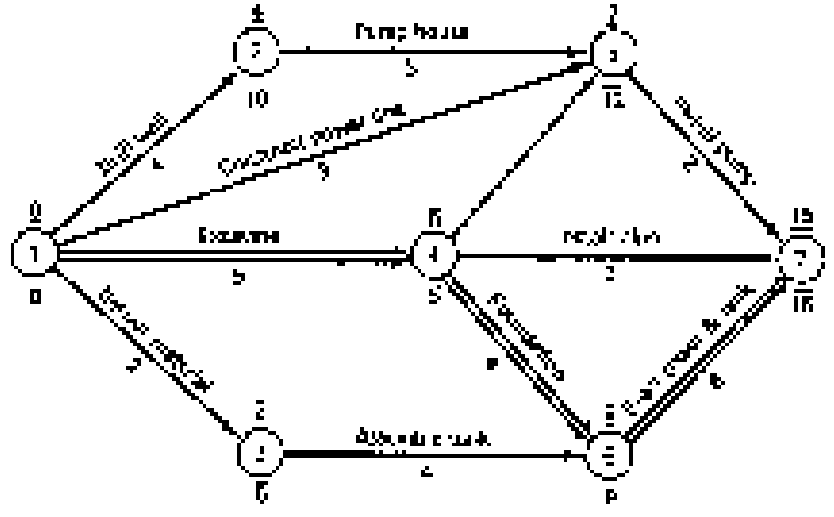

Figure 16-9 Example network—critical path.

[illegible]

[illegible] critical. When the critical path has been identified, it should be clearly indicated on the network by using thick lines, as used in Figure 16–9, or similar means.

Activity Times

Upon completion of the forward and backward passes, we have calculated the minimum duration of our project and identified the critical path. The next step is to calculate the earliest and latest starting and finishing times and the total float (slack) associated with each activity. Such a study is important because these values are used as the basis for scheduling the resources allocated to the project. Two of these values, namely earliest finish and latest finish, are readily obtained from the network, but the remaining values must be calculated. These values are used to be [illegible] actually [illegible]

$$\text{Early start (ES)} = \text{Largest of previous early finish times} \quad (16\text{–}2)$$

$$\text{Early finish (EF)} = \text{Early start} + \text{Activity duration} \quad (16\text{–}3)$$

$$\text{Late finish (LF)} = \text{Smallest of following late start times} \quad (16\text{–}4)$$

$$\text{Late start (LS)} = \text{Late finish} - \text{Activity duration} \quad (16\text{–}5)$$

$$\text{Total float (TF)} = \text{Late finish} - \text{Early finish} \quad (16\text{–}6)$$

or

$$\text{Total float (TF)} = \text{Late start} - \text{Early start} \quad (16\text{–}7)$$

Activity time values for the example network are given in Figure 16–10. Note that activity times are not given for dummy activities. Activity A in 16.CT is the least [illegible] activity, because it has the most total float. While several different types of float have been defined, total float is the most general of these values and is the only type of float that will concern us. Application of float to the scheduling process is covered in the following section.

Activity-on-Node Diagrams

As stated earlier, there are two methods of formats used in drawing network diagrams. The activity-on-arrow format has been used up to this point. In contrast, in the activity-on-node format, the same general principles are followed, but the activity time is drawn inside the activity-on-node diagram. However, the convention for the arrows in the diagram has been reversed to differ from the activity-on-arrow diagram because the arrow (which represents an event in the activity-on-arrow method) is now used to represent an activity. A simple form of the activity-on-node diagram is shown in the diagram of [illegible] which each activity is represented by a circle containing the activity [illegible] and the activity duration.

Figure 16–11 illustrates the activity-on-node diagram for the activity-on-arrow diagram in the activity-on-node technique, dummy activities are not used to represent logic constraints. Thus all arrows [illegible] the same meaning as the dummies in the activity-on-arrow format.

Activity	Description	Duration	Early start	Early finish	Late start	Late finish	Total float
1-2	[illegible]	4	0	4	8	12	8
1-3	[illegible]	2	0	2	3	5	3
1-4	[illegible]	5	0	5	0	5	0
1-6	[illegible]	2	0	2	10	12	10
2-4	[illegible]	1	4	5	12	13	8
3-5	[illegible]	4	2	6	7	9	3
4-7	[illegible]	4	5	9	5	9	0
4-8	[illegible]	6	5	11	9	15	4
5-8	[illegible]	2	2	4	13	15	9
6-7	[illegible]	8	2	10	5	13	3

[illegible]

Figure 16-10 Activity [illegible] for [illegible] network

[illegible] activity-on-node diagram [illegible] 16-13. [illegible] provide space for [illegible] time [illegible] on the node [illegible] [illegible] because [illegible] are evaluated. When [illegible] performed in the manner, it is [illegible] that calculations are performed [illegible] [illegible] and [illegible] not [illegible].

[illegible] diagram [illegible] [illegible] [illegible]

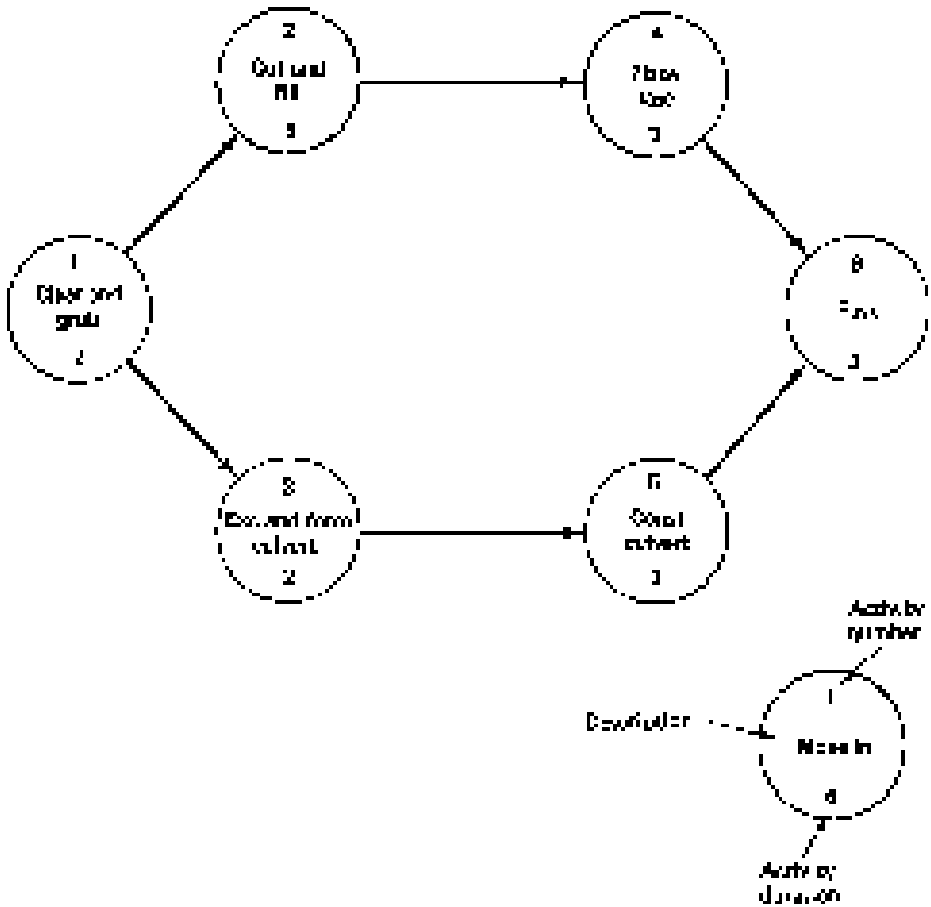

Figure 16–11 Circle diagram for a project.

[illegible] to future reconstruction. [illegible] relationship and the use of dummy [illegible] are discussed in Figure 16–13.

To represent the [illegible] in a project, by some reconstruction, [illegible] information such recognition [illegible] represented in the usual network diagramming convention. For example, consider the network of Figure 16–[illegible]. This plan [illegible] that activity 2 [illegible] and activity 3 [illegible] activity 4 [illegible] activity 5 [illegible] activity 6 [illegible] activity 7 [illegible] activity 8 [illegible] activity 9 [illegible] activity 10 [illegible] activity 11 [illegible] activity 12 [illegible] activity 13 [illegible] activity 14 [illegible] activity 15 [illegible] activity

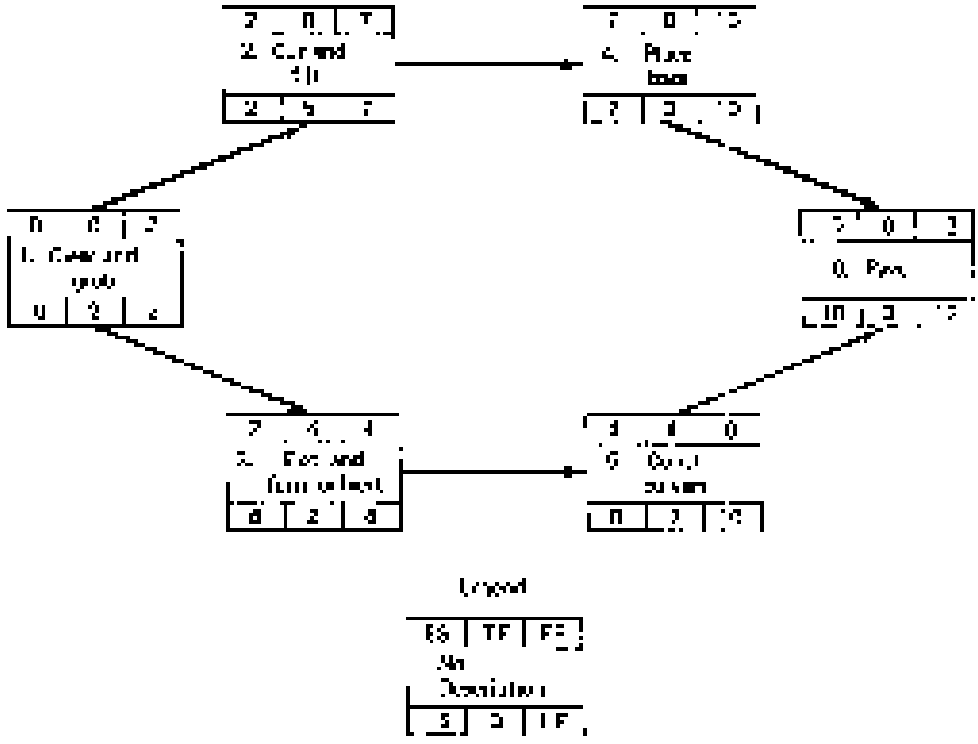

Figure 18–12 Expanded node diagram.

The transitive diagram for the example project is shown in Figure 18–13. Notice that this diagram is essentially the same as the activity-on-node diagram for the project except that only finish-to-start relationships are employed and no lag times are used.

Suppose that we now add the following logical constraints to the current project:

1. Finishing of the foundation and frame requires a 5-day waiting period after completion of the foundation.
2. Installation of plumbing and electrical requires a 2-day waiting period after completion of the frame.
3. The roofing and siding activities are independent.

The precedence diagram for the revised project is shown in Figure 18–14. Notice that the relationship between the early start of activity E and the early finish of activity B (Figure 18–14) is defined by the early finish of activity B plus a 5-day lag. The early start of activity H is defined by the early finish of activity F plus a 2-day lag. The early start of activity D is defined by the early finish of activity B. Finally, the early start of activity G is defined by the early finish of activity F. Although the precedence diagram provides increased flexibility, it requires a higher level of detailed analysis and increased complexity in the form of additional constraints and computations.

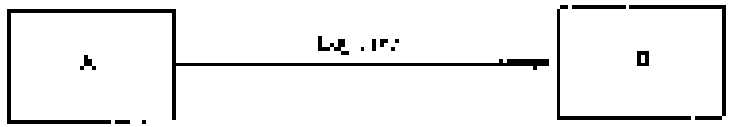

a. Finish-to-start: start of B depends on finish of A plus lag time.

b. Start-to-start: start of B depends on start of A plus lag time.

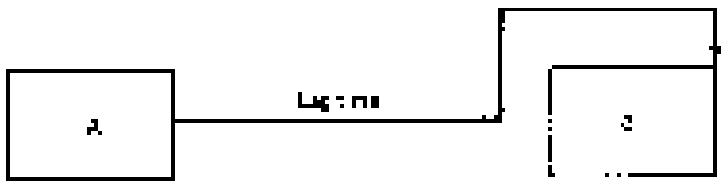

c. Finish-to-finish: finish of B depends on finish of A plus lag time.

Figure 16–13 Dependence diagram relationships

Figure 16–14
Comparison of CPM diagram and precedence diagram

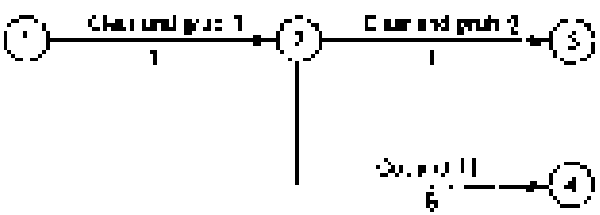

a. Activity on arrow diagram

b. Precedence diagram with activity on node

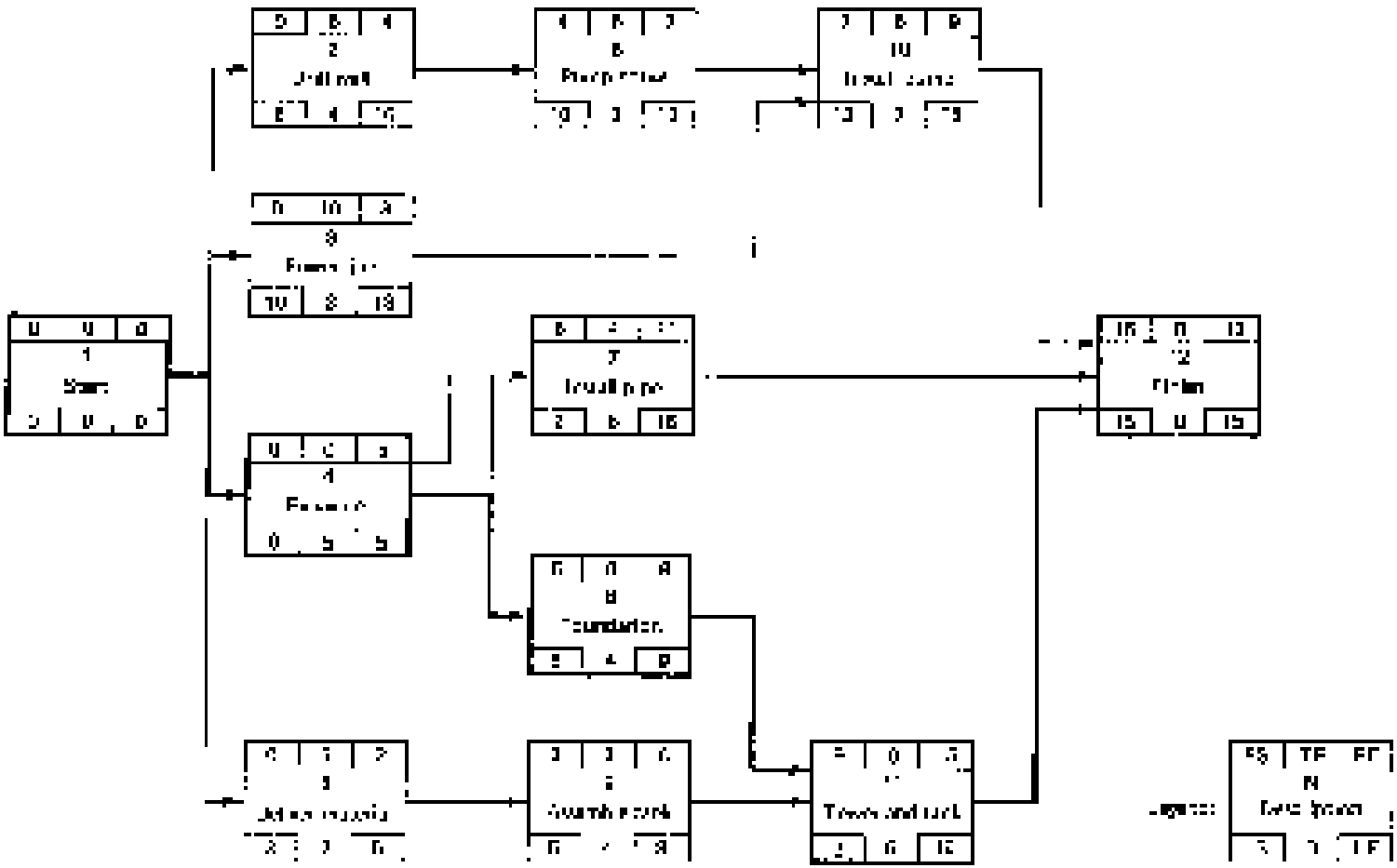

Figure 16-15 Precedence diagram for [illegible] project.

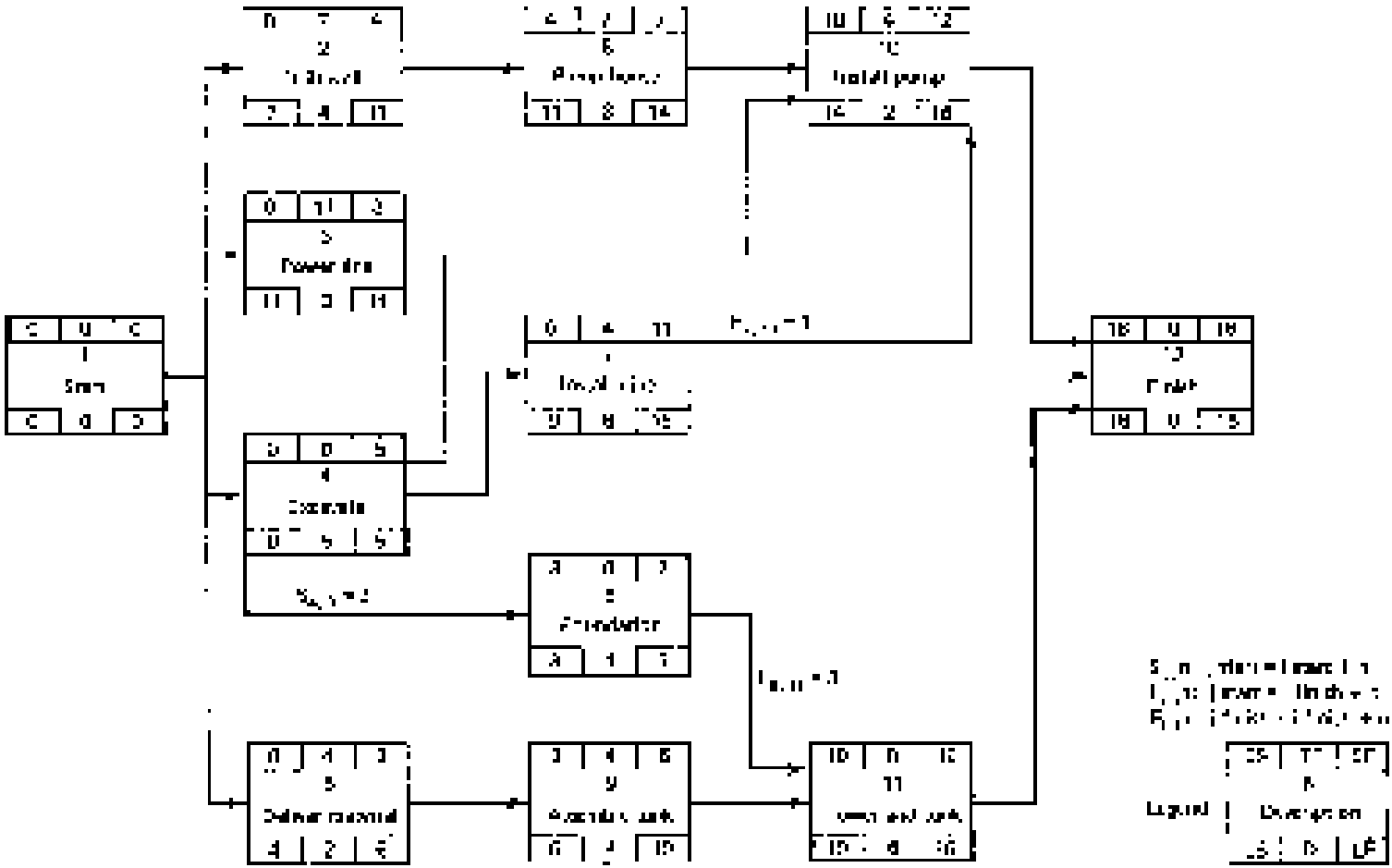

Figure 16-18 Revised example project.

16–4 SCHEDULING AND RESOURCE ASSIGNMENT USING CPM

The Early Start Schedule

[illegible]

[illegible]

[illegible]

[illegible]

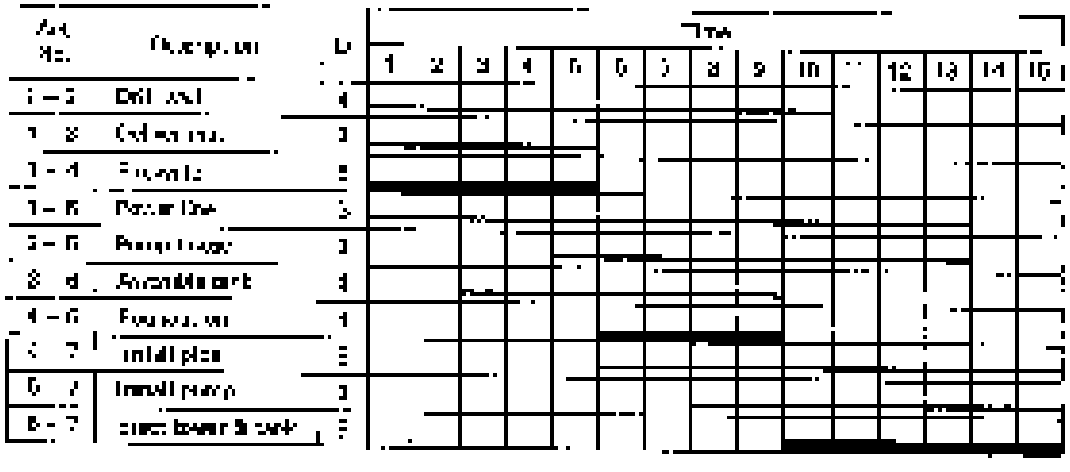

Figure 16–17 A bar chart for example network.

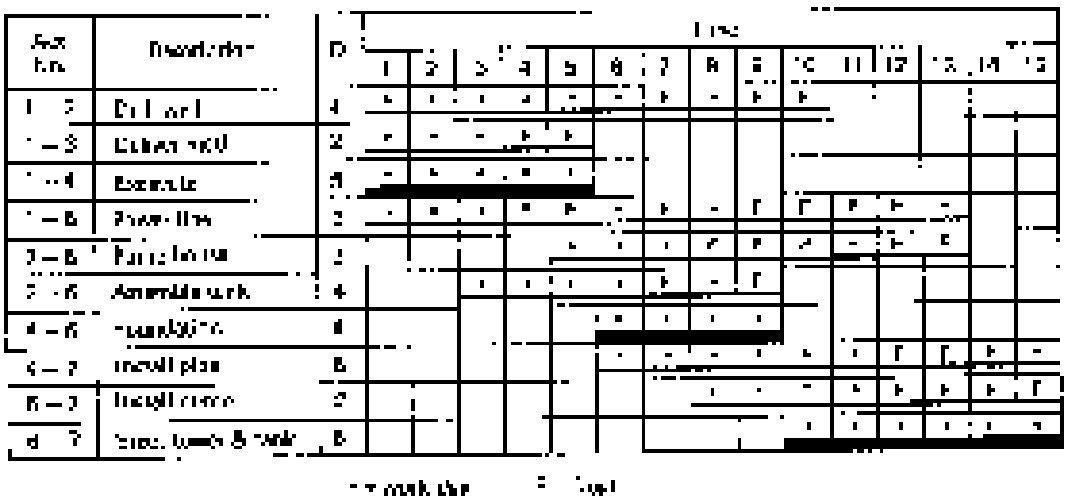

Figure 16-18 Early start schedule for example network.

Since activities are drawn to scale, it is important to incorporate precedence relationships, such as 2–3 and 2–4, and to allow activities with no predecessors to be scheduled before their earliest possible time. Dummy activities that represent logic constraints, rather than actual work, should be included in the network only because the planner prefers to include all work activities in the network. In this example, the dummy activity 4–5 represents the fact that the start of the painting activity 5–6 depends on the completion of the plumbing activity 2–4, but not on the completion of the electrical work 2–3. Activity 4–5 is included in the network because it allows the planner to see the dependency between the plumbing and painting activities, which would be important for the project.

Late Start and Other Schedules

When all activities are scheduled to their latest allowable starting times, a late start schedule is produced, as shown in Figure 16-19. Note that all float is used before the activity 5–6 is scheduled. Although this schedule is the most cost effective, it does not offer much flexibility because any delay in the estimated duration of an activity will cause the project to be late. Rather than accepting a late schedule, it is possible to delay some activities to permit more flexibility, at the expense of an increased number of man-days required.

When preparing a schedule, other considerations, such as resource limitations, must be taken into account. For example, if only one crew is available to install the electrical work, activity 2–3 may be scheduled to start after activity 2–4 is completed. This situation would be a violation of the network logic, such as can only be provided by the planner. In a network, a dummy activity is added between the two activities, and the activity numbers on the schedule to check logic and calculate the activity numbers on the schedule to check logic and calculate. Refer back to Figure 16-17 and note that activity 2–3 may be started at any time after activity 2–4 is completed. In this case, the dummy activity 4–5 is not needed, since the plumbing work is completed before the painting work

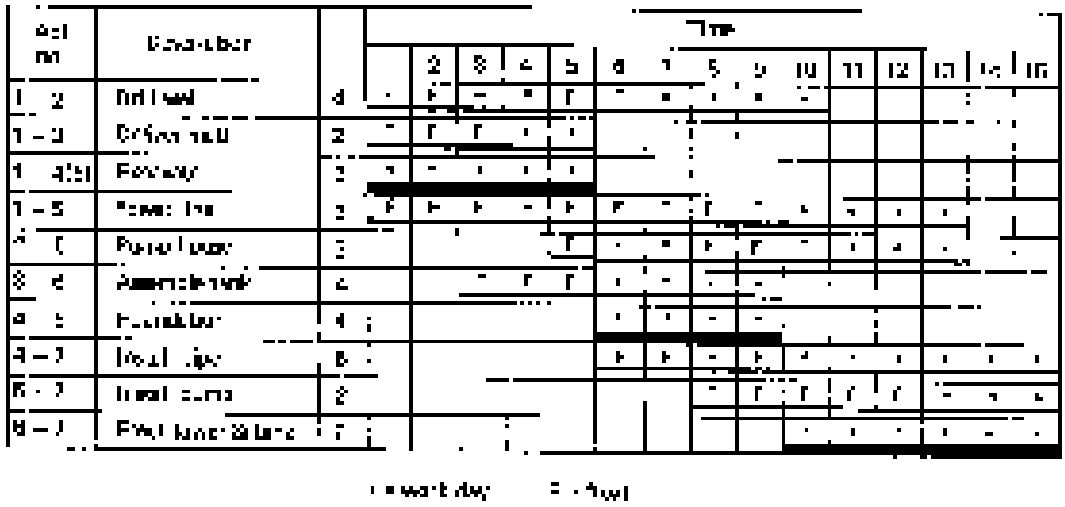

Figure 18–[illegible] Time scale schedule for example network.

[illegible] in the network diagram of Figure [illegible] shows that this is the critical path. [illegible] the presence of dummy activities [illegible] produces [illegible] of activity [illegible] 1–4, 1–5, and 2–5.

Resource Assignment

[illegible] the assignment of resources to a project, the [illegible] with two major considerations for each type of resource. [illegible] the [illegible] of the resources available for each time period and [illegible] to the time period [illegible] in resource requirements for [illegible] (resource)

[illegible] in Figure [illegible] and [illegible] simply replaced the numbers representing the [illegible] of the resource required for the activity during the time period. [illegible] the total [illegible] of the resource required for each time period [illegible] Table [illegible] shows the [illegible] resource requirements for each activity for the example network. The [illegible] requirements [illegible] from 15 workers [illegible] the first 9 days [illegible] 10 workers for the 10th day. Unless the [illegible] prepare [illegible] the [illegible] produced in these [illegible], this problem would [illegible] A better policy would be [illegible] to [illegible] other requirements. This [illegible] by simply [illegible] the [illegible]

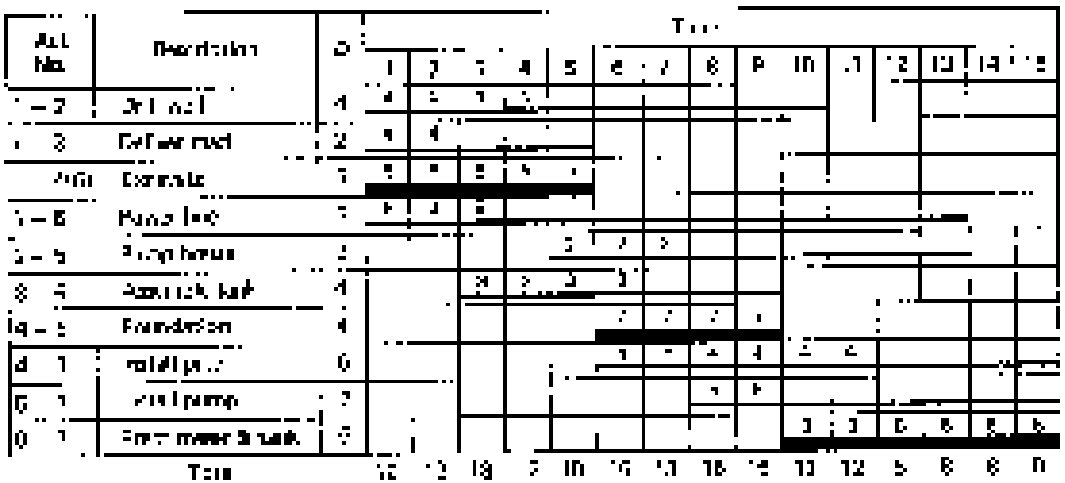

Resources Utilized Presented by Activity

Activity	Number required
1 – 2	4
1 – 3	4
1 – 4	6
1 – 5	5
2 – 6	2
3 – 7	3
4 – 5	7
4 – 7	4
5 – 7	6
6 – 7	8

Figure 16–20 Resource assignment: early start schedule.

A quick scan of this indicates that the maximum resources required for the project is 19, indicated in Figure 16–20 is 135 workdays. This yields an average requirement of about 13 workers per day. By inspecting the resource histogram, the project schedule of Figure 16–19 may be altered to reduce the peak requirements of this schedule by one-half to 12 and 13 workers. Similar procedures may be applied when a maximum resource limit exists in excess of 19 workers. As shown by these examples, leveling the project demands for a fixed number of resources enhances the project's efficiency. The daily requirements for resources can be determined, especially if the work is repetitive, by tabulating the information in the manner shown in Table 16–2. While the manual techniques suggested above will be satisfactory for small projects, for larger projects the procedures and calculations are very time-consuming. Thus, another program is needed to develop a resource-leveled schedule for large projects. Reference 7 identifies a number of computer programs.

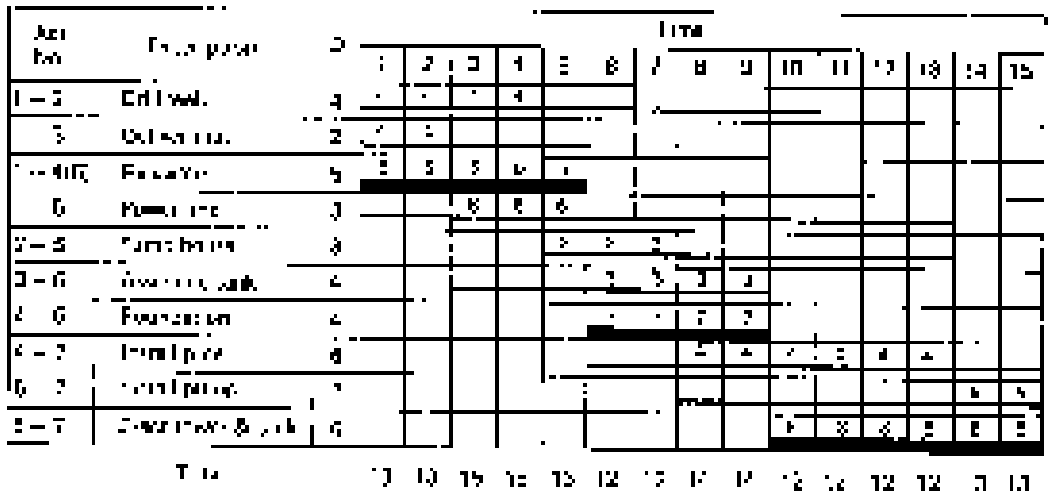

Figure 16-21 Improved level of resource assignment

16–5 PRACTICAL CONSIDERATIONS IN NETWORK USE

When to Use Network Methods

The methodology introduced in the simple network diagram shows the power to consider [illegible] and to focus on specific areas in which the project is behind schedule. [illegible] the network diagram is [illegible] communication tool for maximizing the information [illegible] in the project. For these reasons, preparation of network diagrams [illegible] the project [illegible] size. The level of detail [illegible] will change depending on the size [illegible] of the project. [illegible] approach [illegible] diagrams proposed by some experts are used in a particular [illegible] operation [illegible] apply to [illegible] situations. Projects [illegible] $1.5 million. Strategic planning have been successfully managed with a CPM network [illegible] $100 million. When [illegible] specialist [illegible] may be [illegible] to [illegible] the [illegible] with [illegible] the operation [illegible] requirements.

Even projects [illegible] summary [illegible] network [illegible] Furthermore, [illegible] network diagram can be used to determine whether the project [illegible] specialist [illegible] qualified [illegible] deviations. [illegible] be [illegible] more [illegible] be substantial. [illegible] proposed, the network diagram can then be used as a tool for [illegible] the project [illegible] of the existing environment [illegible] be used [illegible] detail [illegible] necessary [illegible] the project. [illegible] consider [illegible] the level of detail [illegible] include [illegible] complex [illegible] of the project.

Preparing the Network

Regardless of the method of the dynamics, good [illegible] may [illegible] [illegible] project manager [illegible] to develop [illegible] [illegible] [illegible]

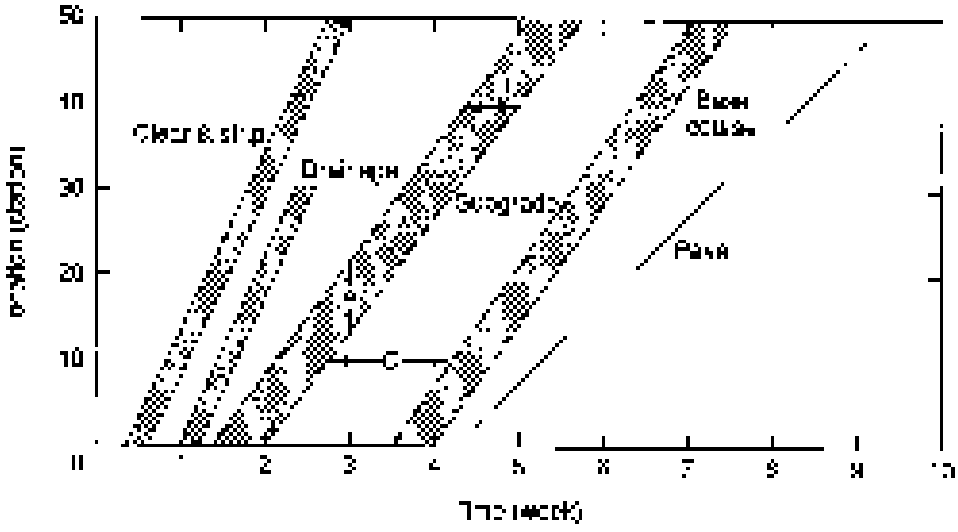

Figure 16-22 LSM diagram for project of Figure 16-1

activities proceed linearly from one end of the project to the other at a rate particular to that activity—represented as CPM. As such, linear scheduling techniques are most commonly employed on such projects.

The Linear Scheduling Method (LSM) is similar to the Line of Balance (LOB) scheduling technique developed in the early 1940s for industrial and construction projects and is sometimes identified by that name. The advantage of the LOB technique is that components or processes are made available at the time they are required to meet the production schedule of the assembly. The disadvantage of the LSM technique is a delay that occurs in the finishes between activities when the production rate of one activity is greater than that of the following activity. A brief explanation of the Linear Scheduling Method applied to a highway construction project is provided below.

A Linear Scheduling Method Diagram

An LSM diagram of the highway construction project of Figure 16-1 is shown in Figure 16-22. The five activities involved are Clear and Strip, Drainage, Subgrade, Base Course, and Pave. Note that these activities are represented by a line of varied increasing thickness.

The height of each activity at a given time represents the relative amount of work that is being conducted at that time. Thus, Strip, which is a short, expedited, and simple operation, is the thinnest line. The slope of the line indicates the rate at which the work is advanced. The slope of the line must be finished at the activity at a specific location. Thus, the Drainage activity must be finished at week 1.5 and continues to week 5.5. The horizontal distance between activities represents the time gap between the finish of one activity and the start of the

[illegible] activity is a dummy activity. Thus, 7 weeks of time work is saving 10 days the completion of 5 dummy work activities [illegible] 15 weeks.

Note that the Drainage activity [illegible] Clearance Site but is only [illegible] 30. [illegible] 30. The Drainage activity [illegible] also overlap the Clearance Site activity. If it were determined that [illegible] would be [illegible] the same location without interference between [illegible].

PROBLEMS

1. Reduce the accompanying network diagram by taking early and latest times to the diagram. Mark the critical path, determine activity-on-node diagram showing every event. Indicate each event's finish and slack.

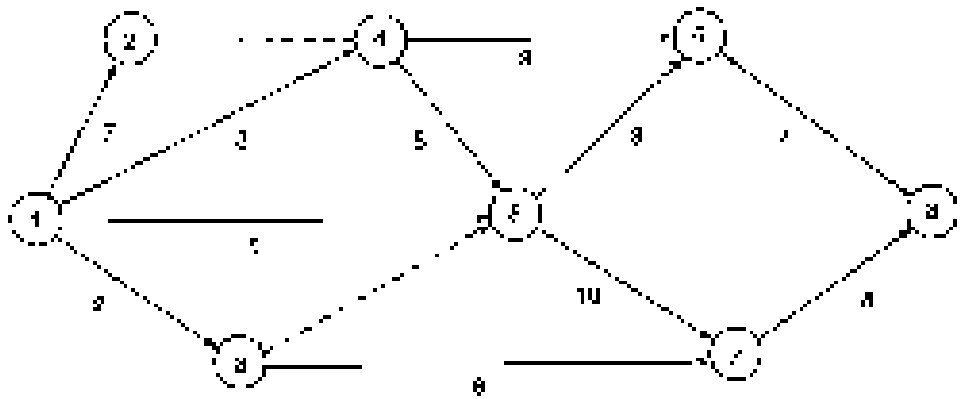

2. What effect will the delays in activities 1–3 and 1–4 of Figure 16-1 have on project completion time?
3. For the network of Problem 5, assign resources based on an early start schedule. Indicate the total resource requirements for each time period. Level the resource requirements so that to consider a 20-day time. The resource requirements for each activity are as follows:

Activity	Workers Required
1–2	6
2–3	4
2–4	15
2–5	10
3–6	[illegible]
4–6	[illegible]
[illegible]	[illegible]
[illegible]	[illegible]
[illegible]	4

4. What advantages do CPM diagrams have over conventional bar graph schedules?

5. Refer to the network planning network diagram shown in Figure 10-15. Assume activity durations in the diagram. Mark the critical path. Then, in a tabular format, calculate the following: early start, late start, early finish, late finish, and total float.

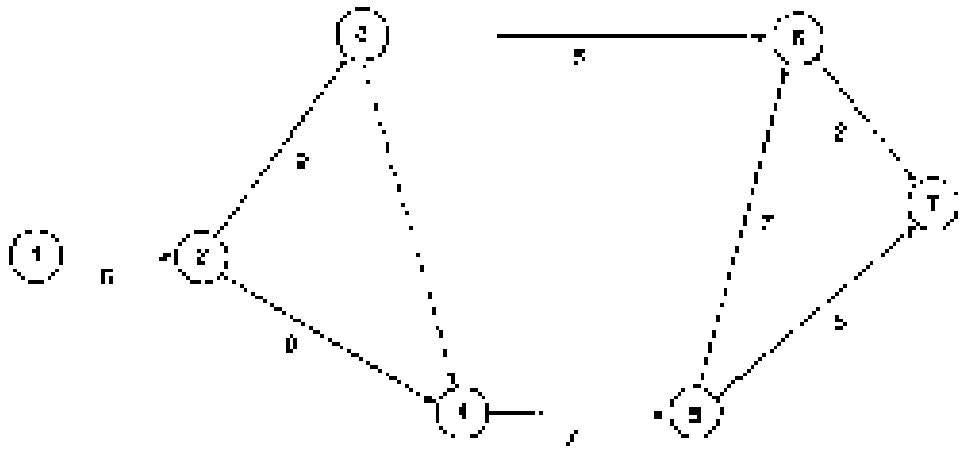

6. How does the actual progress shown on the second week in Figure 10-16 compare with the scheduled progress? Express your answer in terms of percentage of scheduled progress that has actually been achieved.

7. Draw an activity-on-node network diagram representing the following precedence relationships.

Activity	Precedes or Completion of Activity
A	—
B	—
C	
D	A
E	B
F	C
G	E
H	D and G
I	F
J	
K	D and I

8. Using the CPM diagram in Figure 10-15, calculate the critical path. Then compare the critical path to the critical path in 5.

9. Analyze the possible cost savings in Figure 10-15 by using the relationship of cost versus time. Enter the early start, late start, early finish, late finish, and total float times on the diagram. Mark the critical path.

Activity Relationships			
Start to Start	Finish to Start	Finish to Finish	Lag Time
8 to 7			8
	7 to 10		8
		8 to 11	4

10 Delaying [illegible] activity [illegible] Diagram 1.

REFERENCES

1. [illegible] Project Management, 2nd ed. New York: Wiley, 1964.
2. [illegible] "[illegible]," [illegible] Engineering and Management, [illegible] (1986) pp. [illegible].
3. [illegible] Project Management, 2nd ed. New York: Wiley, 1964.
4. [illegible] Robert H. [illegible] Construction Management. New York: Wiley [illegible].
5. [illegible] "[illegible]," [illegible] Journal of the Construction Division, vol. [illegible] (1982) pp. [illegible].
6. [illegible] Project [illegible] Gantt to Hillips, and [illegible] Management and [illegible] PMI/ASCE Proceedings, [illegible] New York: [illegible], 1983.
7. [illegible] "[illegible]," [illegible] Construction Management, [illegible] Michigan, [illegible] 1986.
8. [illegible] "[illegible]," [illegible] Proceedings—ASCE (May 1961).
9. [illegible] "[illegible]," [illegible] Management Science, Washington, DC, pp. [illegible].
10. [illegible] "[illegible]," [illegible] (1972) (Mar 1971), pp. [illegible].
11. [illegible] "[illegible]," [illegible] Journal of Construction Engineering and Management, vol. [illegible] (1987), pp. [illegible].

17

Construction Economics

17–1 INTRODUCTION

As the construction industry [illegible] in size and complexity, it has become increasingly difficult to survive. Therefore, the financial management of construction companies [illegible] successful companies have evolved from backgrounds in business and finance rather than from construction itself. However, [illegible] that certain fundamental [illegible] required for business and management skills to be provided by managers for success in construction professionals.

A complete discussion of [illegible] construction economics is beyond the scope of this book. Rather, the purpose of this chapter is to introduce the reader to the terminology and basic principles involved in determining the [illegible] costs of [illegible] equipment, analyzing the feasibility of replacing existing equipment, [illegible] production equipment, and the financial management of construction projects.

17–2 TIME VALUE OF MONEY

Everyone is aware that the amount of money held in a savings account will increase up to [illegible] interest rate and [illegible] to [illegible]. Capital is invested in [illegible] account. The value of a sum of money left on deposit after any period of time may be [illegible] using Equation 17–1:

$$F = P(1 + i)^n \qquad (17\text{–}1)$$

where F = value of a sum of money after n periods of time

P = present value

i = interest rate per period

n = number of periods

The expression $(1 + i)^n$ is characterized as a single payment compound amount factor. Equation 17-1 can be used to find the present value (present worth) of some future amount, resulting in the factor $(1 + i)^{-n}$.

$$P = \frac{F}{(1 + i)^n} \tag{17-2}$$

The expression $1/(1 + i)^n$ is called the single payment present worth factor. Equations 17-1 and 17-2 are the basic formulas that yield the value of a sum of money at a specified point in time. Equivalent sums of money are those which, when compounded or discounted at the same interest rate, yield the same future dollar amount. Thus, the same future dollar amount, the same interest rate, and the same time period uniquely define the equivalent present value. The expressions that are developed in this chapter are based on the assumption that information is available.

The basic goal in the area of engineering economy is to develop a type of decision analysis commonly called engineering economy. The methods of engineering economy are widely used to analyze the economic feasibility of proposed projects involving capital investments. Such investments increase the rate of return on investment. However, because of their complexity and the difficulty of estimating future cash flows, these techniques have been largely overshadowed by the simpler but inferior techniques. Equipment costs, like other costs, are typically determined by the methods described in the following section rather than by employing engineering economy techniques. A great deal of analysis, however, is very helpful when comparing the cost of different investments. This is illustrated in the next section and is described in Section 17-4.

17-3 EQUIPMENT COST

Elements of Equipment Cost

In earlier chapters we have discussed the proper capitalization of the major items of construction equipment and some methods for estimating equipment hourly production. We then revisited the original hourly cost by dividing hourly production to obtain the unit cost of production. However, up to this point we have simply assumed that we know the hourly cost of operation of the equipment. In this section we consider methods for determining the hourly cost of operation of a fleet of equipment. Although the procedures expressed in this section are the most commonly employed in the construction industry, they are not the only possible methods.

In following the procedures of this section, you will find that it is necessary to make many estimates of future conditions, like the salvage value. The best basis for estimating such factors is the use of historical data, preferably those recorded by your own organization or company operating similar equipment under similar conditions. If such data are not available, consult the equipment manufacturer and/or dealer representatives.

Equipment ownership and operating costs are typically reflected in the analysis in the same way as are equipment costs, and operating costs. Operating costs are those

[illegible] Operating costs, however, are [illegible] when the equipment is used.

Owning Costs

Owning costs are those [illegible] incurring regardless of [illegible]

- Depreciation
- Investment [illegible]
- Insurance
- Taxes
- Storage cost

Methods for calculating each of these items are described next.

Depreciation

Depreciation represents the decline in market value of an item of equipment due to age, wear, deterioration, and obsolescence. It is a noncash [illegible] expense. Depreciation is used for several purposes: (1) evaluating tax liability, (2) [illegible] the equipment component of the firm's equipment cost. Note that it is used for tax [illegible] from depreciation [illegible] purposes. For tax purposes many companies depreciate equipment as rapidly as possible to obtain the maximum tax deduction for liability during the first few years of equipment [illegible]. However, there is a simple distinction [illegible] tax [illegible] rates of the U.S. Internal Revenue Service (IRS) [illegible] of the equipment's [illegible] and [illegible] on the sale of equipment [illegible]. The depreciation methods explained in the following pages are those commonly used in the construction equipment industry. Because, [illegible] with the subject of engineering economics, [illegible] the [illegible] of equipment [illegible] may [illegible] profound. When the methods of engineering economics are used, the decision on [illegible] equipment ownership costs will [illegible] single cost [illegible].

In the [illegible] depreciation, [illegible] equipment [illegible] full [illegible] [illegible] equipment, the [illegible] depreciation [illegible] the [illegible] depreciation [illegible] processes. [illegible] equipment [illegible] equipment [illegible] as [illegible] possible [illegible].

The equipment life [illegible] provisions [illegible] equipment's expected [illegible] life. The life [illegible] equipment [illegible] depreciation [illegible] by the [illegible].

The most commonly used depreciation methods are the straight-line method, the sum of the years' digits method, the double declining balance method, and the IRS prescribed methods. Descriptions for applying each of these methods are outlined below.

Straight-Line Method. [illegible] equal [illegible] for each year of equipment life. The annual depreciation [illegible] the amount to be depreciated divided by the equipment life in years (Equation [illegible]).

[illegible] the equipment's initial cost less its salvage value [illegible] the straight-line method equation

$$D_t = \frac{\text{Cost} - \text{Salvage value}}{N} \qquad (17\text{–}4)$$

where N = estimated life of asset
t = year of life (1, 2, 3, and so on)

EXAMPLE 17.1

Using the straight-line method, find the annual depreciation and book value [illegible] each year for a truck under review with an initial cost of $50,000 and a salvage value of $5,000, and an estimated life of 5 years.

SOLUTION

$$D_{1,2,3,4,5} = \frac{\$50{,}000 - \$5{,}000}{5} = \$9{,}000$$

Year	Depreciation	Book Value (end of Period)
0	0	$50,000
1	$9,000	41,000
2	9,000	32,000
3	9,000	23,000
4	9,000	14,000
5	9,000	5,000

Sum-of-the-Years'-Digits Method — [illegible] method of depreciation produces a [illegible] depreciation charge in the earlier years of life and progressively decreases the charge [illegible] in the depreciable life is the same as that used in the straight-line method. The depreciation for any period is calculated by multiplying the amount to be depreciated by a fraction [illegible] (17–5). The denominator of the depreciation factor is the sum of the year digits for the depreciable period. For [illegible] + 2 + 3 + 4 + 5 = 15 for a 5-year life. The numerator of the depreciation factor is simply the year digit [illegible] in reverse order (i.e., 5 = [illegible] 1). Thus for the first year of a 5-year life, 5 will be used as the numerator.

$$D_t = \frac{\text{Year digit}}{\text{Sum-of-years' digits}} \times \text{Amount to be depreciated} \qquad (17\text{–}5)$$

The procedure is illustrated in Example 17.2.

EXAMPLE 17–2

For the Bank of Example 7–1, find annual depreciation and book value at the end of each year using the sum of the years' digits method.

SOLUTION

Using Equation 17–4,

$$D_1 = \frac{5}{15} \times (90{,}000 - 5000) = \$28{,}333$$

$$D_2 = \frac{4}{15} \times (90{,}000 - 5000) = \$22{,}667$$

$$D_3 = \frac{3}{15} \times (90{,}000 - 5000) = \$17{,}000$$

$$D_4 = \frac{2}{15} \times (90{,}000 - 5000) = \$11{,}333$$

$$D_5 = \frac{1}{15} \times (90{,}000 - 5000) = \$5{,}667$$

Year	Depreciation	Book Value (End of Period)
0	–	$90,000
1	$28,333	61,667
2	22,667	39,000
3	17,000	22,000
4	11,333	10,667
5	5,667	5,000

Double-Declining-Balance Method. Substantial accelerating depreciation results if the sum-of-the-years'-digits method, which is more in keeping with the first year of life. However, in using that method, the beginning balance should be calculated for a particular year by multiplying a depreciation factor by the equipment's cost minus the depreciation taken in the previous years (Equation 17–5). The annual depreciation factor is found by dividing 2 by 2N (2/N), where N is the equipment life in years. This factor is over three times the corresponding factor in the sum-of-the-years'-digits method (2/5 versus 1/5). Unlike in the two depreciation methods, the double-declining-balance method does not directly relate the equipment's book value to its average annual benefit. If the depreciation period is set at the equipment's useful life, the equipment's book value may be higher than its salvage value. Thus, a switch to straight-line depreciation calculation in some period prior to when the salvage value is reached. The annual calculation is as follows:

$$D_t = \frac{2}{N} \times \text{Book value at the beginning of year} \qquad 17\text{–}5$$

EXAMPLE 17–9

For the data of Example 17–2, find the annual depreciation and book value at the end of each year using the modified accelerated cost recovery system.

SOLUTION

Using Equation 17–2:

$$\text{Annual depreciation factor} = \frac{2(0.2)}{3} = 0.40$$

$$D_1 = 0.40 \times 500{,}000 = 200{,}000$$

$$D_2 = 0.40 \times 300{,}000 = 120{,}000$$

$$D_3 = 0.40 \times 180{,}000 = 72{,}000$$

$$D_4 = 0.40 \times 108{,}000 = 43{,}200$$

$$D_5 = 0.40 \times 64{,}800 = 25{,}920 \text{ or } \$24{,}920^{*}$$

Year	Depreciation	Book Value (End of Period)
0	—	$500,000
1	$200,000	300,000
2	120,000	180,000
3	72,000	108,000
4	43,200	64,800
5	24,920	39,880

*Because the depreciation for 2002 (0.40 × 64,800 = 25,920) would reduce the book value to less than $5000, only $24,920 ($64,800 − $39,880) may be taken as a deduction.

IRS Prescribed Methods. Under the Internal Revenue Service tax rules, the property classes and the lower IRS depreciation lives are used in the calculation of depreciation for purposes. The Modified Accelerated Cost Recovery System (MACRS) has been adopted by the Internal Revenue Service for depreciation of equipment placed in service after 1986. Although several different depreciation methods are permitted under MACRS, the recommended method (which must be used in the General Depreciation System (GDS) with a modified depreciation schedule for 200% DB and the half-year convention.

Under the MACRS system, depreciation for all property except real property is spread over 3 years, 5 years, 7 years, or 10 years (the "class lives") and equipment, furniture, automobiles, trucks, and general-purpose machinery are classified as 5-year property. The yearly deduction for depreciation is calculated as a given fixed percentage of the original cost (price) for each year of the life (either rounding or averaging rules). The "half-year convention" considers all property placed in service or disposed during a year as having been acquired or disposed of at midyear. Using the 200% DB method and the

Half-year conventions are used, and depreciation percentages are 20.00, 32.00, 19.20, 11.52, 11.52, 5.76 and 5.76 for years 1 through 6 respectively. Notice that regardless of the month of purchase, only one half of the normal double declining balance depreciation is taken in the year of purchase. The remaining cost basis is to be spread over a period of six years, through the year following the natural life. This depreciation for any machine is actually taken over a 6-year period, as illustrated in Example 17-4.

EXAMPLE 17-4

For the owner of Example 17-3, find the annual depreciation and book value at the end of each year using the MACRS method.

SOLUTION

$$D_1 = 0.20 \times 50{,}000 = 10{,}000$$
$$D_2 = 0.32 \times 50{,}000 = 16{,}000$$
$$D_3 = 0.192 \times 50{,}000 = 9{,}600$$
$$D_4 = 0.1152 \times 50{,}000 = 5{,}760$$
$$D_5 = 0.1152 \times 50{,}000 = 5{,}760$$
$$D_6 = 0.0576 \times 50{,}000 = 2{,}880$$

Year	Depreciation	Book Value (End of Period)
0	0	300,000
1	10,000	290,000
2	16,000	264,000
3	9,600	244,400
4	5,760	238,640
5	5,760	232,880
6	2,880	230,000

Investment Cost

Investment cost (or interest) represents the annual cost (interest or earnings) associated with capital invested in a machine. If an annual rate is used, it is simply the interest charge on the cost basis. However, if the cost of equipment is presented from company records, an interest or earnings cost to be the rate of return on capital invested. This investment cost is computed as the product of an interest rate multiplied by the value of the equipment, or an annual cost per hour. The investment cost for a specific case of machinery is given by a formula using the average value of the equipment during the year. However, the average hourly investment cost may be more accurately determined using the value of the equipment at the beginning and end of the year, given by Equation 17-5.

$$\text{Average investment} = \frac{\text{Initial cost} + \text{salvage}}{2} \qquad (17\text{–}8)$$

The results obtained using Equation 17–8 should be used with care. The assumption of value decreasing linearly over time is not valid for all equipment. Moreover, the result is meaningful only if the investment cost calculated in the numerator is normalized to a cost per year. It will be valid in the only years of equipment lifetime, which in fact are zero. Thus the method should not be used for comparing equipment alternatives in which the purchase price is greater than one year's worth of income. Cost for equipment purchase.

Insurance, Tax, and Storage

Insurance and taxes represent the cost of fire and casualty and liability insurance for the equipment. Taxes represent the cost of property tax and licenses for the equipment. Storage and repairs represent the cost of storage and maintenance for equipment not in use (yards and barns), the wages of guards and employees needed to handle equipment, and cost of energy, and associated indirect costs.

These costs are normally expressed as a percentage of equipment value, based on annual basis. In this case, the costs are simply divided by the number of operating hours in the year to give the cost per hour for these items. Storage costs are usually expressed as a percentage of the initial equipment cost. Insurance and taxes are usually expressed on a flat basis. For purposes of comparing these costs with other costs, it is necessary to convert the annual cost or percentage cost by dividing the costs by the total number of hours of equipment use. Alternatively, the cost can be expressed as a percentage of the initial cost of equipment, tax, insurance, and storage.

Total Owning Cost

Total equipment owning cost is found as the sum of depreciation, investment, insurance, tax, and storage. As mentioned earlier, the elements of owning cost are known on an annual basis. However, whether the individual elements of owning cost are calculated on an annual basis, hourly basis, total owning cost should be expressed on an hourly cost.

Depreciation Rates and Investment Credit

In order to stimulate the economy and encourage businesses to purchase new equipment, the U.S. government has established a depreciation schedule for equipment, and tax laws in effect since 1986 provide for an accelerated depreciation schedule. A percentage of the cost of new equipment is deducted each year in which the equipment is placed in service. The remaining portion of equipment cost is then capitalized and, in turn, depreciated in accordance with the schedule.

The new tax regime is simpler than that of equipment ownership. The first, representation including the depreciation terms, is already been discussed. The second is investment credit. Investment credit is a tax measure that was introduced in the U.S. government to stimulate the economy, industry, and production. Its intent is by providing a credit for the purchase of new equipment. When in effect, the investment credit provides a direct reduction in

[illegible] mainly production in remote areas. The investment cost is considered a [illegible] equal to 10% of the initial cost of the purchase of equipment. [illegible] equipment disabled at 5 year intervals. However, also in [illegible] the [illegible] [illegible] [illegible]

Table 17-1 Fuel consumption factors (gal/hr/hp)

Type of Equipment	Load Conditions[1]		
	Low	Average	Severe
Gasoline and diesel engine	[illegible]	[illegible]	[illegible]
Compactor, self-propelled	0.068	0.052	0.030
Crane	0.043	0.037	0.030
Excavator, hoe or shovel	[illegible]	[illegible]	0.048
Loader			
Track	0.080	0.042	0.071
Wheel	0.024	[illegible]	[illegible]
Motor grader	[illegible]	[illegible]	0.047
Dozer	[illegible]	0.085	0.044
Scraper			
Dozer	0.088	[illegible]	0.043
Wheel	[illegible]	[illegible]	0.052
[illegible]	0.014	0.022	0.039
Wagon	0.088	[illegible]	0.043

[1] Low, light work in considerable lift; average, normal load and operation; severe, heavy work, lifting

Table 17-2 Service cost factors (% of hourly fuel cost)

Operating Conditions	Service Cost Factor
Lightweight	20
Average	33
Severe	50

Repair Cost

Repair costs represent the cost of equipment upkeep and maintenance, except for the cost of preventive maintenance, routine service, and the replacement of equipment items and tires, per month or year. Repair costs vary considerably, but are considered the biggest item in determining costs for construction equipment. (See Section 13-5 for collection of equipment cost data and operation costs.)

Operating repair costs are usually estimated as a percentage of the equipment owning cost (see below). Table 17-3 [illegible] lifetime repair costs or hourly repair cost. This may be done simply by dividing the total repair cost by the expected equipment life. It is best to base the average hourly repair cost. Although [illegible] repair [illegible] for [illegible] cost [illegible] for a particular type of equipment life. As you might expect, repairs are typically low during the early years of the equipment

Table 17–9 Equipment lifetime repair cost factors (percent of initial cost per hour)

Type of Equipment	Operating Conditions		
	Favorable	Average	Severe
Crawler tractor and crawler	40	50	70
Compactor, self-propelled	50	70	90
Grader	40	50	60
Excavator, hoe, or shovel	50	70	90
Loader			
Track	50	70	90
Wheel	40	50	70
Motor grader	40	50	60
Scraper	50	70	90
Water			
Grader	40	50	60
Wheel	50	70	90
Tank, off-highway	70	90	110
Wagon	40	50	60

[illegible] suggested that Equation 17–7 be used to determine an hourly cost of equipment ownership. Equipment ownership is equal to

$$\text{Hourly equipment cost} = \frac{\text{Year digit}}{\text{Sum of years' digits}} \times \frac{\text{Lifetime repair cost}}{\text{Hours equipment}} \qquad (17\text{–}7)$$

This method of accounting equipment ownership is essentially the reverse of the sum-of-the-years-digits depreciation method, because the year digit used in the numerator of the equation is [illegible] for the first year. [illegible]

EXAMPLE 17–5

Determine the hourly repair cost for the first year of operation of a crawler tractor having $130,000 initial cost, a 5-year life, average operating conditions, and 2500 hours of operation during the year.

SOLUTION

$$\text{Lifetime repair cost factor} = 0.50 \qquad \text{(Table 17–9)}$$

$$\text{Lifetime repair cost} = 0.50 \times \$130{,}000 = \$65{,}000$$

$$\text{Hourly repair cost} = \frac{1}{5} \times \frac{\$65{,}000}{2500} = \$5.20$$

Table 17–4 Typical tire life (miles)

Type of Equipment	Operating Conditions		
	Favorable	Average	Severe
Dozers and loaders	3,900	2,100	1,000
Motor graders	5,000	3,200	1,000
Scrapers			
Conventional	4,000	3,000	2,500
Tandem gear	4,000	3,000	2,500
Push-pull, self-loading	3,000	2,700	2,100
Industrial wagons	3,000	2,100	1,000

Tire Cost

The cost of tires is a major component of equipment operating cost. Among operating costs, tire costs are the most variable. Tire costs are directly proportional to the equipment's rated capacity. The cost is difficult to estimate because of the difficulty in forecasting tire life. As always, historical data obtained under similar equipment and conditions provide the best basis for estimating tire life. However, Table 17–4 may be used to estimate tire life. The result will add about 15% to the equipment cost. The formula for tire cost is shown below. It may be used to estimate tire cost for equipment not

$$\text{Tire cost} = 1.15 \frac{(\text{Purchase price of tires})}{(\text{Expected tire life, h})} \qquad (17\text{-}8)$$

Special Items

The cost of renting implements such as blades, buckets, and scraper blade cutting edges and tips, as well as repair parts, supplies, and some particular items, should be calculated as a separate item of operating expense. As usual, full cost accounting is required. The only rule is to put them.

Operator

The total item labeled as equipment operating cost is [illegible] wages. Care must be taken to include all costs such as worker's compensation insurance, Social Security taxes, overtime or premium pay, time for meals, etc., in the hourly wage figure.

Total Owning and Operating Costs

After the ownership and operating costs have been calculated, the sum can be used to yield total ownership and operating costs per unit of production. Although this sum may be used for comparing and for choosing equipment, it does not reflect other factors such as idle time, weather, and production. Idle time can be added to the sum by using the total cost of the equipment as the basis.

EXAMPLE 17–6

Determine the capital ownership and operating cost for the second year of operation of the twin engine scraper described below.

Cost delivered = $152,000
Tire cost = $16,000
Estimated life = 5 years
Salvage value = $15,000
Depreciation method = sum-of-the-years-digits
Investment (interest) rate = 10%
Insurance, taxes, and storage rate = 8%
Operating conditions = average
Rated power = 450 hp
Fuel price = $1.20/gal
Operator's wages = $12.00/h

SOLUTION

Ownership Cost

Depreciation

$$D_2 = \frac{4}{15} \times (152{,}000 - 15{,}000) = 36{,}533 = 37{,}000 \quad \text{(Eq. 17–3)}$$

$$\text{Depreciation} = \frac{37{,}000}{2000} = \$18.50/\text{h}$$

Investment, tax, insurance, and storage cost

Owning cost = Investment, tax, insurance, and storage = 0.18 × 1.05

$$\text{Average investment} = \frac{152{,}000 + 15{,}000}{2} = \$83{,}500 \quad \text{(Eq. 17–4)}$$

$$\text{Investment, tax, insurance, and storage} = \frac{83{,}500 \times 0.18}{500} = \$30.06/\text{h}$$

Total ownership cost = 5.91 + 12.00 = $24.00/h

Operating Cost

Fuel cost

Estimated consumption = 0.035 × 450 = 15.75 gal/h = 15.75 × 1.20

Fuel cost = 15.75 × 1.20 = $21.00/h

Service cost:

service cost = [illegible] = $[illegible]/h (Table 17-2)

Repair cost:

Lifetime repair cost = 0.90 × [illegible] × 0.40 = $ 36,000 (Table 7-3)

$$\text{repair cost} = \frac{1}{15} \times \frac{36{,}000}{3{,}000} = \$[illegible]/h \quad (\text{Eq. } 7\text{-}7)$$

Tire cost:

Lifetime tire life = 3000 h (Table 17-4)

$$\text{tire cost} = 6.15 \times \frac{15{,}000}{3000} = \$30.75/h$$

Specific Ownership Costs:

Operating wages = $22.00/h

Total ownership cost = [illegible] × (0.[illegible] + 0.40 + 0.[illegible]) = 30.00 = $71.25/h

Total O & O Cost:

Operating and ownership cost = 24.00 + 71.25 = $95.25/h

17–4 EQUIPMENT RENTAL

Internally there are two ways to provide for equipment by contractors and firms. For example, a company can provide the [illegible] equipment purchased [illegible] $[illegible] million vehicle. The amount was [illegible] equipment model. Over the same period, the value of rented equipment purchases [illegible] to about $[illegible] billion. With [illegible] equipment, [illegible] equipment [illegible] have been [illegible] equipment by [illegible] equipment [illegible].

Since [illegible] equipment [illegible] (usually [illegible] than 1 year) [illegible] payment [illegible] equipment rental [illegible] the [illegible] billing [illegible] equipment [illegible] dealer [illegible] equipment maintenance except [illegible] [illegible] equipment [illegible] the rental payments [illegible] the option [illegible].

A [illegible] of the rent-lease [illegible] process is [illegible] in the following [illegible].

17–5 THE RENT-LEASE-BUY DECISION

[illegible]

Advantages of equipment ownership include [illegible] equipment resources, and availability of equipment when needed. However, renting and leasing require little initial capital [illegible] equipment [illegible] usually treated as a current expense. A careful analysis of these alternatives for obtaining equipment is complex and must include consideration of the expected conditions as well as equipment [illegible] and product [illegible]. In general, processing equipment will [illegible] the lowest health equipment [illegible] equipment is properly maintained and fully utilized. However, [illegible] equipment being used constitutes [illegible] equipment is being utilized or [illegible]. The decision to rent is usually less expensive for equipment with low utilization. Leasing is in [illegible] between the two and may be the best choice when equipment is limited and equipment utilization is high. The [illegible] may provide an [illegible] opportunity to purchase the equipment at low [illegible] after lease payments have been paid which [illegible].

One approach to comparing the cost of buying, leasing, and renting equipment is [illegible] in Exhibit 17–5. The [illegible] are [illegible] the [illegible] and the present value [illegible]. The assumptions based on a method suggested by [illegible] Brealey and Myers in their [illegible] the calculations for present value [illegible] the present worth factors for [illegible] years are used for simplicity. [illegible] assume that a [illegible] equal annual payments, maintenance and repair costs are included from [illegible], although maintenance and repair costs are included in the [illegible]. Notice [illegible] depreciation [illegible] the [illegible] in this case, ACRS depreciation and 10% [illegible].

[illegible] the particular circumstances of [illegible] 17–5, leasing is [illegible] than either buying or renting the equipment. [illegible] 5 [illegible] 40% [illegible] the [illegible] convenience [illegible] Exhibit 17–[illegible]. Illustration [illegible] by [illegible] present value [illegible] equipment [illegible] 8% [illegible] depreciation [illegible] leasing and renting, [illegible] costs [illegible] utilization [illegible] both of these alternatives [illegible] 5 years cost of [illegible] is [illegible] 40% [illegible] than renting. [illegible] 7 [illegible] hourly cost [illegible] renting [illegible] hourly rate [illegible] equal to 40% utilization, [illegible] of [illegible] utilization [illegible] renting [illegible] equipment.

Figure 17-1 Hourly cost of buying, renting, and leasing for Example 17-7.

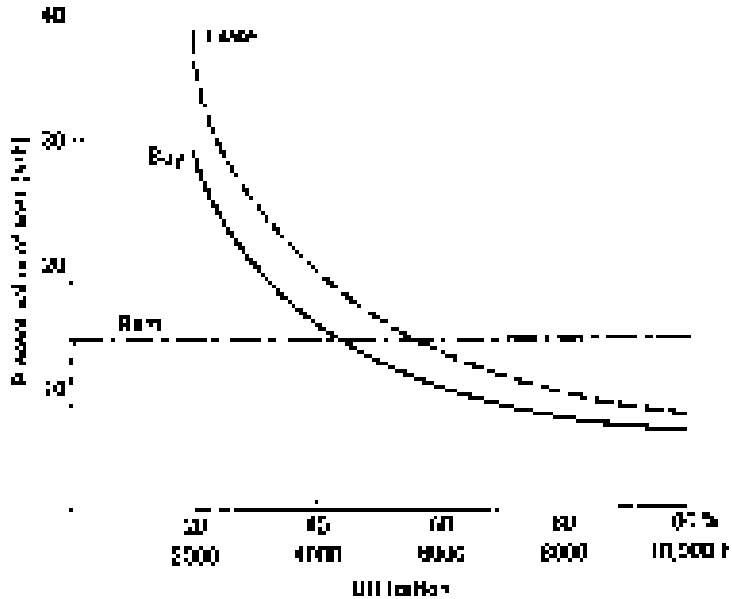

EXAMPLE 17-7

Management of an industry facility is considering purchasing a piece of equipment to improve the facility's condition described. Determine the economic advantage of each alternative based on present worth.

Basic assumptions:

- Company's minimal rate of return = 20%
- Company's effective income tax rate = 40%
- Financial equipment life = 10 years (5 years for 5-year)

Purchase assumptions:

- Equipment cost = $40,000
- Estimated salvage value after 5 years = $10,000
- Cost recovery method = 5-year ACRS (using depreciation of 15%, 22%, 21%, 21%, and 21%)
- Investment credit (10%) = $4,000
- Cost of capital = $44,500 (net cost, after investment credit)
- Energy savings (20%) = $20,000
- Lease period = 5 years
- Lease interest rate = 10%
- Monthly payment = $1,000

Loan amortization:

Year	Payments	To Principal	Interest
1	347,[illegible]	[illegible]	312,195.72
2	347,333.04	[illegible]	[illegible]
3	[illegible]	[illegible]	[illegible]

Lease transaction:

Initial lease = 5 years

Lease payment = $8,500 per month

Initial lease cost = 3 months in advance

Income transaction:

Rental period = 5 years, monthly

Rental rate = $5,500 per month

Mileage [illegible] month factors (average of 2[illegible] of [illegible] values for [illegible]):

Initial year [illegible]

Year 1 = [illegible]

Year 2 = 0.59[illegible]

Year 3 = [illegible]

Year 4 = [illegible]

Year 5 = [illegible]

Residual of Year 5 = [illegible]

SOLUTION

Values are converted to present value dollars.

	Purchase Cost ($)							
	Initial	Year 1	Year 2	Year 3	Year 4	Year 5	Final	Total
Payments	[illegible]	[illegible]	[illegible]	[illegible]	0	0	0	[illegible]
Rentals	0	0	0	0	0	0	[illegible]	[illegible]
Tax savings	0	0	0	0	0	0	[illegible]	[illegible]
Tax savings depreciation	0	[illegible]	[illegible]	[illegible]	[illegible]	[illegible]	0	[illegible]
Tax savings interest	0	[illegible]	[illegible]	[illegible]	0	0	0	[illegible]
Residual	0	[illegible]	0	0	0	0	0	[illegible]
Net cost	[illegible]	[illegible]	[illegible]	[illegible]	[illegible]	[illegible]	[illegible]	[illegible]
Present value of net cost	[illegible]	[illegible]	[illegible]	[illegible]	[illegible]	[illegible]	[illegible]	[illegible]

	Year 0	Year 1	Year 2	Year 3	Year 4	Year 5	End	Total
				Cash Cost ($)				
Revenue	[illegible]	[illegible]	[illegible]	[illegible]	[illegible]	[illegible]	0	[illegible]
Operating expenses	[illegible]	[illegible]	[illegible]	[illegible]	[illegible]	[illegible]	0	[illegible]
Net cash flow	[illegible]	[illegible]	[illegible]	[illegible]	[illegible]	[illegible]	0	[illegible]
Present value of net cash flow	[illegible]	[illegible]	[illegible]	[illegible]	[illegible]	[illegible]	0	[illegible]
				Annual Cost ($)				
	Year 0	Year 1	Year 2	Year 3	Year 4	Year 5	End	Total
Revenue	0	[illegible]	[illegible]	[illegible]	[illegible]	[illegible]	0	[illegible]
Operating expenses	0	[illegible]	[illegible]	[illegible]	[illegible]	[illegible]	0	[illegible]
Net cash flow	0	[illegible]	[illegible]	[illegible]	[illegible]	[illegible]	0	[illegible]
Present value of net cash flow	0	[illegible]	[illegible]	[illegible]	[illegible]	[illegible]	0	[illegible]

17-6 FINANCIAL MANAGEMENT OF CONSTRUCTION

The high rate of bankruptcy in the construction industry was noted in Chapter 1. A survey compiled by Dun & Bradstreet on construction company failures in the United States indicate that the major factors of inadequate financing, underbidding, inadequate accounting, and poor management control have led to 80% of all failures. This chapter assumes that a construction firm is a business enterprise and that the financial management of a construction company is equally important as engineering management. In this section we will consider the basic principles of financial planning and control for construction projects.

Financial Planning

Financial planning for a construction project involves estimating prices to bidding to be competitive, controlling the cash flow, prices, income and expenditures to cash flow and determining the amount of work that a contractor can safely undertake at any time.

Cash flow forecasting for a project is a time-consuming process involving estimating the cash flow for a construction project in accordance with the payment specifications. Other items to be considered include the cost of materials, subcontracts and services, equipment, overhead, and fixed costs, the sales revenue, and the cash management and administration costs. The estimating for bidding purposes is discussed in Chapter 18.

A typical schedule of cash flow shows the pattern of project expenditure and project income. It is common practice in the construction industry for contractors to be paid for the work done, less a retention fee (percentage of the value of completed work) and payment for materials and equipment on the site, project. Progress payments are made for the value of completed work, and payments for materials

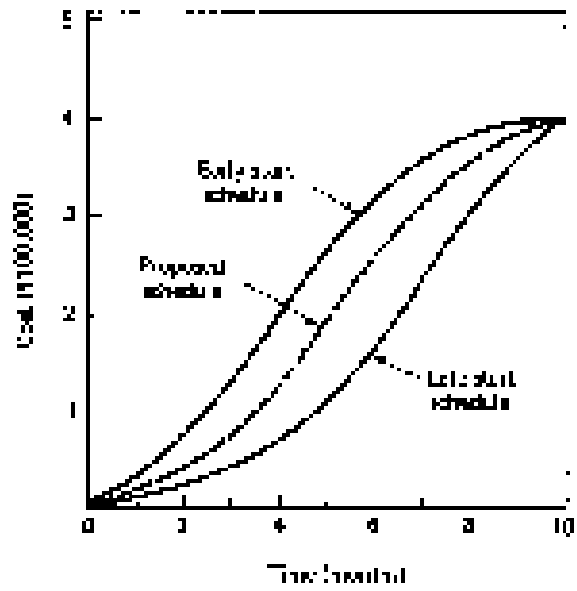

Figure 17.2 [illegible] versus time.

[illegible]

Project Cost Control

[illegible]

Figure 17.3 Project financial schedule

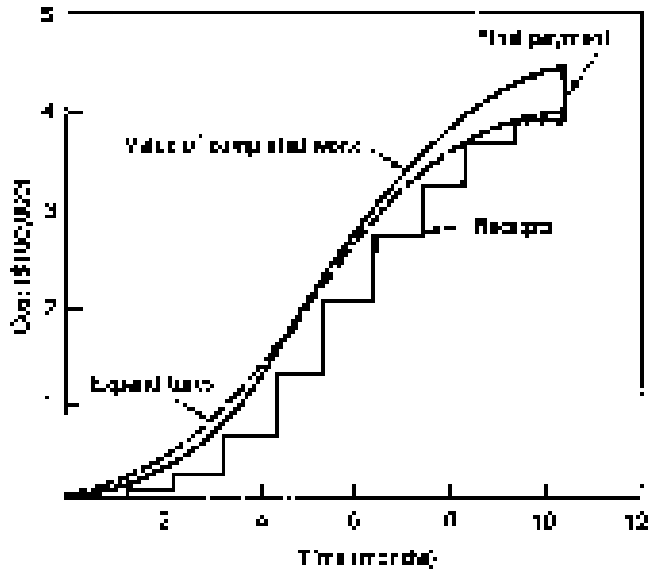

To complete projects on time it is necessary to have a method for identifying and controlling the project work elements. The new CPM procedure is quite straightforward. Project managers can have a very beneficial effect on the time of completion of the project and the project cost. A project can generally be completed with a shorter time by paying a higher cost. The system of project control must assure that the control system permits changing all labor, material, equipment, and overhead costs—that is, the appropriate work time, labor, and overhead costs for the project can usually be adjusted to achieve cost goals. Responsibility reports to the foreman and other supervisors should be kept for monitoring and assisting with meeting the objectives of budgets and actually reporting. These reports may be easily computed if one sheets are used to identify the activities in which the time is expected. Non-critical path activities may be similarly computed if a record is kept of the time gained in each activity by crash measures. The cost of materials used may be based on actual costs incurred or the appropriate activity cost values based on standard costs. Overhead costs may be allocated to the activities in which the overhead costs are incurred. It may be necessary to prorate overhead costs to the appropriate activity or activities involved.

To perform a comparison of project progress versus costs it is necessary to list project reporting times and compare them with reporting times and costs. The interval between reports will depend on the nature and time frame of the project. Monthly intervals are commonly used as the basis for reporting progress payments. However, weekly management meetings are sometimes used to review cost and performance reports for the control of critical tasks in the project.

A number of systems have been developed for scheduling projects and monitoring and controlling time and cost on project conditions. One such system, called PERT/Cost, has been developed by the U.S. government and is now extensively used by government to plan and control projects. Figure 17.4 illustrates a PERT/Cost report for a project. Knowledge

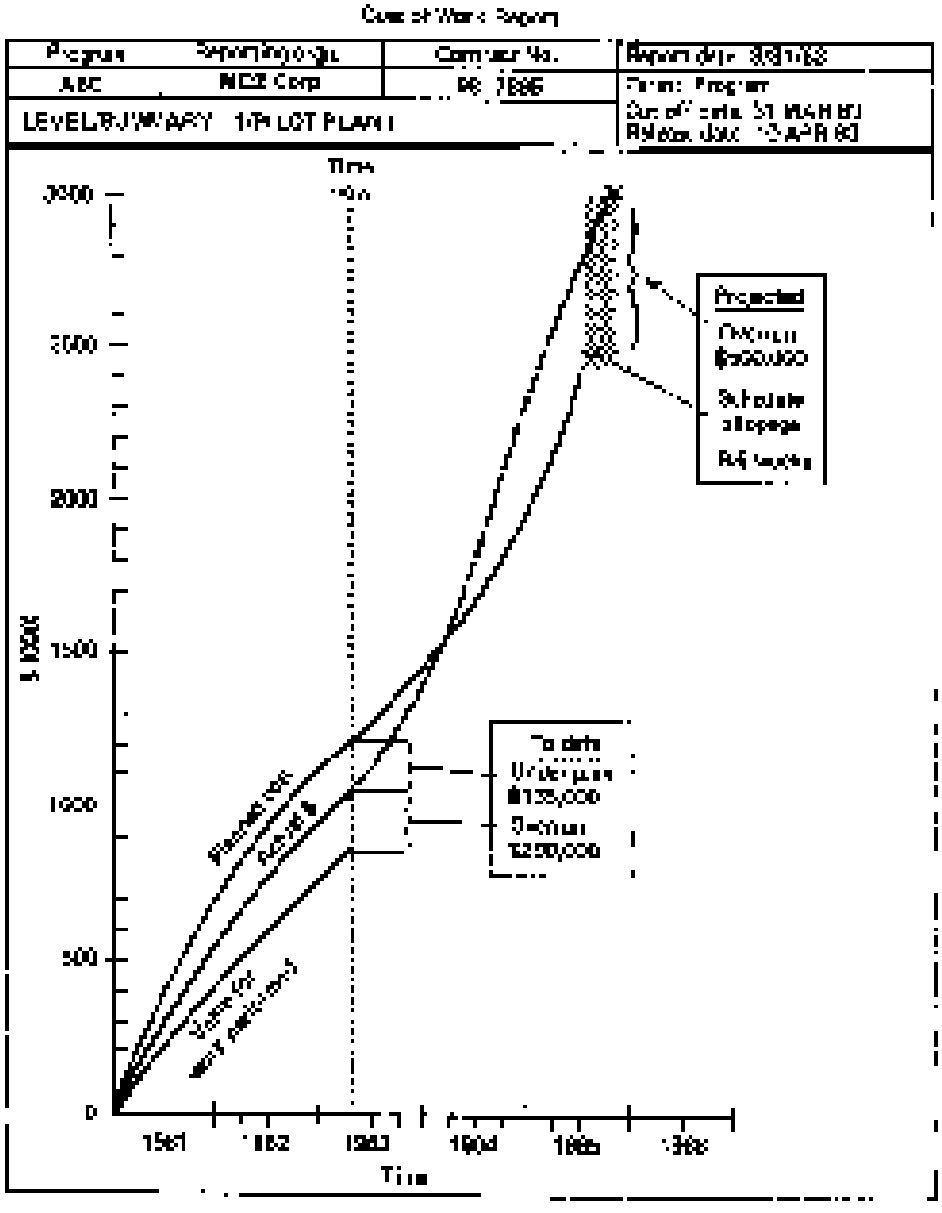

Figure 17-4 [illegible] progress [illegible] R1 Coordinating Group, U.S. Government)

[illegible]

PROBLEMS

[illegible] For the project whose data are shown below, perform a complete cost control analysis, including work and progress payments and cash flow. What is the contractor's maximum negative cash flow and when does it occur? Progress payments are calculated at the end of each month and received the middle of the following month. Retainage is held on progress payments. Assume that the project is complete, including retainage, and received the middle of the month following project completion.

Month	End-of-Month Cumulative Expenditures	Value of Work
1	$15,400	$[illegible]
2	[illegible]	24,000
3	48,200	16,000
4	72,000	[illegible]
5	120,000	70,200
6	144,000	[illegible]
7	210,000	216,000
8	270,000	258,000
9	240,000	300,000
10	324,000	319,000
11	335,000	317,000
12	396,400	330,000

[illegible] Analyze the cost of renting, leasing, and purchasing a backhoe under using the data given here. Use an after-tax cash flow analysis based on

Basic assumptions:

Marginal tax rate = [illegible]%

After-tax rate of return = [illegible]%

Alternative depreciation = 200% declining for 5 years

Present value factors [illegible]

Year	[illegible]
1	[illegible]
2	[illegible]
3	[illegible]
4	[illegible]
5	[illegible]
End of [illegible]	[illegible]

Equipment assumptions:

Cost = $[illegible]

Contract price: [illegible] years × [illegible]

Cost recovery period = 5 years MACRS

Down payment = [illegible]

Loan terms = [illegible] months = [illegible]/month

Interest schedule:

Year	Interest
1	[illegible]
2	2840
3	1979

Other assumptions:

Terminal value = [illegible] years

Land salvage value = $[illegible]/month

Tax payment = 3 months in advance

Inflation assumptions:

Rate of inflation = 5 percent, compounded monthly

Escalation = [illegible]

3. Find the hourly operating cost for the five-year life of the rental equipment. Use as the average daily usage:

Rated power = 300 hp ([illegible])

Fuel price = $[illegible]/gal ([illegible])

Fuel consumption = [illegible]

Operating conditions = average

Hours per year = 2000 h/year

Utilization = [illegible]%

4. Determine the probable average cost per hour over the equipment's life, assuming 200 operating hours per month. Use the data below. Use the straight-line method of depreciation.

Operator cost = $[illegible]/h

Operating consumables = [illegible]

Scrap value = $[illegible]

Cost of money = [illegible]

Expected trade-in = 5 years

Hours operated = [illegible] hours

Estimated trade-in value = $[illegible]

Fuel cost = $[illegible]

Lubricating oil = [illegible] kW-h

Rate for interest, taxes, insurance, and miscellaneous = [illegible]%

13. What are the advantages of equipment rental compared with equipment purchase?

14. A crawler tractor costs $[illegible], has an estimated salvage value of $[illegible], and has a 5-year life. Find the annual equivalent and book value at the end of each year using the sum-of-the-years'-digits method of depreciation.

15. For the data of Problem 14, find the annual depreciation and book value at the end of each year using the sum-of-the-years'-digits method of depreciation.

16. Calculate the precise hourly owning cost for the case of Problem 14 where the owner of the equipment uses it for a guaranteed 2000 hours during the year. The cost for taxes, insurance, and miscellaneous is 12% of the initial cost, and the salvage value is 25%. Use the sum-of-the-years'-digits method of depreciation.

17. What factors have been taken into account in the majority of rental rates of a company for rent?

18. The [illegible] program determines that a dump average [illegible] and [illegible] a large cost of repairs and [illegible] equipment [illegible] the life of the equipment. This [illegible] highlight a method of determination. Solve Problem 4 using your program.

REFERENCES

1. [illegible] Equipment Guide for Contractors, [illegible], Peoria, IL.
2. [illegible], and Charles E. [illegible], Managing Equipment and Construction Jobs, [illegible], Wiley, [illegible], 1988.
3. [illegible] Equipment [illegible], [illegible].
4. [illegible] Equipment Guide, Dodge, [illegible], Chicago, IL.
5. [illegible], Construction Equipment Management, [illegible], New York, McGraw-Hill, 1991.
6. [illegible], Managing Construction Equipment, [illegible], Englewood Cliffs, NJ, Prentice Hall, [illegible].
7. [illegible], Construction Equipment, [illegible], Englewood Cliffs, NJ, Prentice Hall, [illegible].

18 Contract Construction

18–1 INTRODUCTION

The Construction Process

[illegible]

Construction Contract Law

[illegible]

18–2 BIDDING AND CONTRACT AWARD

Bid Preparation

[illegible]

[illegible]

[illegible]

[illegible]

[illegible]

[illegible]

[illegible]

Bidding Procedure

The [illegible] steps in the bidding procedure have [illegible] common [illegible] that include [illegible] qualified bid [illegible] [illegible]

contractors to public school districts — except in special circumstances — is governmental agencies are required to work out bids by advertising long enough to ensure adequate competition, usually three bids should be received.

Contractors in the organization process, in bidding, should be supplied with at least one complete set of contract documents. Alternatives may be required to meet the requirements of project plans and specifications for submission of bids on the time allowed. Bid preparation should be based on the size and complexity of the project. Time should be has been suggested as a guideline, in minutes.

The Associated General Contractors of America, in cooperation with other professional organizations, has developed a model order bidding procedures for use in bidding construction and engineering contracts which are designed to encourage competition in bidding and increase responsiveness. Following the receipt of bids, the owner or agent should be prepared for a prompt yet complete audit of bids and of bidders. Any proposal form should be rejected if it is not in the prescribed manner or if it has not been signed by the bidder. Alternates are optional items based on the basic project scope. Some alternates may or may not be selected by the owner after bids are received, with the contract awarded on the lowest bid price.

Bid openings are usually open to the public, and in such cases bid prices are announced as the bids are opened. In sealed bid competition between contractors, the relevant factors are highly objective, the deadline for submission of the sealed bid cannot be changed, and bidders are directly informed of the winning bidder.

Contract Award

After the bids are opened, they are evaluated by the owner to determine the lowest responsible bid. The performance of construction is the communication that the contractor possesses the technical and financial ability to perform the work required by the contract. The method of qualification varies with respect to the method. U.S. government contracting systems require the owner (the agency) to execute contracts with the lowest responsible bidder. A bid qualification system is used to determine which bidder may be awarded.

Another method of bidding is prequalification, called prequalification. Under this procedure only those contractors determined to be capable of performing an invitation to submit bids for the project. Prequalification criteria are based on the ability of prospective bidders to provide a list of contractors' assets and income statements, include bid bonds, performance bonds, and payment bonds. A bid bond guarantees that the bidder will provide the required performance and payment bonds if awarded the contract. A performance bond guarantees completion of the project as described in the contract documents. A payment bond provides for payment of subcontractors, laborers, and suppliers on the contract. After successful completion of the prequalification process, qualified bidders are notified, usually by letter, of the prequalification process. The contract is typically formed the actual execution of a contract between the owner and the contractor.

Subcontracts

Subcontracts are contracts between a prime contractor and secondary contractors or suppliers. Subcontracts are widely used in the building construction for the installation of electrical, plumbing, and heating and air-conditioning systems. In some special circumstances

between the prime contractor and the subcontractor are similar to those between the owner and the prime contractor. Financial relationships are essentially only in the private sphere and are of no concern to the owner. All the performance of the subcontractor is information that is necessary only for the purpose of obtaining a competitive bidding process.

Since subcontract costs constitute a major part of the cost for projects, it is essential that the prime contractor obtain a competitive cost for subcontracts. Traditionally, successful prime contractors have shared a mutual respect with those subcontractors with whom they have been used to working in the past. However, some prime contractors have adopted the practice of choosing their subcontractors on the basis of price by negotiating with other subcontractors. This practice is referred to as "shopping" and is widely considered to be unethical, since it could lead to a less satisfactory performance. As a result, bidding procedures should be established to identify subcontractors at the time of bidding and to notify the subcontractors of the project. Some government agencies have given full or partial exemption from the requirements for general contractors and for construction specialty trades. While performing the bidding procedure greatly complicates project coordination, it is ethical.

18–3 CONSTRUCTION CONTRACTS

Contract Elements

The basic elements of a construction contract include offer, acceptance, and consideration. Each element must be provided. The offer is a formal bid or proposal submitted by a contractor to build a certain facility according to the specifications and conditions set forth by the owner. Acceptance occurs when the owner accepts the award or offer. Consideration is the payment for the work performed. Payment may be by lump sum or periodic payments.

Contract Types

Contracts may be classified in several ways. The two principal methods of classification are by method of award and by method of pricing. The types of contracts by method of award are negotiated contracts and competitive contracts. The procedure for the competitive award of the contract was described in the previous section. A negotiated contract is the method in which a contractor is selected without competitive bidding. Some of the reasons and conditions for this method are those noted in the previous section. While federal procurement laws and regulations require competitive bidding, there are several exceptions, negotiated contracts are permitted under special circumstances. Private owners may, of course, award contracts in whatever manner they desire.

The contract types of concern typically include fixed-price contracts and cost-reimbursement contracts. These two types have many variations. Some of the principal types of fixed-price contracts are firm fixed-price contracts and fixed-price with escalation contracts. Other characteristics of fixed-price contracts include incentives and bonuses, retainage, and liquidated damages. Specifications for the conditions of the work are included in the contract documents. Contracts generally specify the amount to be paid for

each unit of work or not for total contract amount. Such contracts are used when the quantities of work cannot be accurately estimated in advance. The unit price contract specifies unit prices for the requirements for assuming responsibility for the work actually performed and the basis for the payment to the contractor – is not known until the project is completed. A combination of lump-sum and unit-price provisions can be used in a single contract.

Fixed-price with incentives contracts are a variation whereby the contractor is subject to rewarding or penalties for specified performance. Such contracts reduce the risk to the contractor and provide a fixed price for some, but not all, aspects of the work. The incentive contract may well result in a lower initial overall price than would be for a fixed-price contract. Examples of this kind of contract can be seen in most classes of work and widely used in the United States.

Other types of requirements are available in a number of forms. Some of these include:

- Complete cost-type contract
- Cost-plus fee
- Cost-plus fee with guaranteed maximum
- Cost-plus-incentive fee

A cost-plus-a-percentage-of-cost contract pays the contractor a fixed percentage of the project's actual cost. This type of contract is not used by U.S. government agencies because it provides a negative incentive for the contractor to raise project costs. That is, the higher the project cost, the greater the contractor's fee. In most widely used forms of cost-plus contract, the cost-plus fee for contract does not reward the contractor for increased productivity and has no provisions for penalties. The cost-plus-fixed-fee with guaranteed maximum contract adds some of these elements to keep costs down. The cost-plus-incentive-fee contract is used because it encourages the contractor to keep costs down. The total contract price will not exceed the specified maximum. However, it is necessary to include a fee for extra work that will be processed to compensate for unpredictable risk in advance. The contract is based on the contractor's actual performance in relation to the original project cost. In the event that the contractor's actual cost is less than the original estimated cost, the contractor receives a reward or bonus. If the actual cost is more than the original estimated cost, the contractor is penalized by an increase in the total price for the project. Cost-plus-incentive-fee contracts are more difficult to administer because the contractor's actual cost must be monitored and measured. All contracts should clearly define the rights of the parties while the contractor will be in a better position to decide the basis for determining the compensation.

Contract Documents

A construction contract is made up of the following documents:

- Agreement
- Conditions of the Contract (Generally General Conditions and Special Conditions)
- Plans
- Specifications

The agreement describes the work to be performed, the required completion date, and the price. The price may be a lump sum, a cost plus fee, or a cost plus incentive fee. Other contract terms include the contract time, payment terms, and provisions for changes, termination, and dispute resolution. The Uniform Commercial Code provides a set of rules governing the sale of goods, including contracts for construction materials, and provides a framework for contract formation and interpretation. The Uniform Commercial Code also contains provisions applicable to the construction of contracts for the sale of goods

It should be pointed out that the owner is financially responsible for the consequences of any owner-caused delays. The subject of changes and delays is discussed further in Section 18–5.

18–4 PLANS AND SPECIFICATIONS

Plans

Construction plans are commonly based on the technical decisions and acceptable work to be performed. Like negotiations with the specifications, they should provide a complete description of the facility to be constructed. Types of contract drawings include the drawings and detailed working drawings. Contract drawings are usually classified or numbered according to specialty, such as structural, electrical, and mechanical.

Specifications

Construction contract specifications are provided to define requirements for the materials, equipment, and workmanship to be used and installed in a project. Contract drawings are usually in two-dimensional form, drawn and must be read together. An item mentioned or shown on one the plans or specifications is to be required because it is mentioned or shown on one of the documents. However, when the plans or specifications conflict, the General Conditions of the contract generally provide that the requirements of the specifications will govern. In most cases, the contract documents will state that the requirements of the specifications will govern. The specifications may specify the ways in which the engineer or the particular operation may be specified either by method specification or by performance specification. A method specification states the precise requirements and procedures to be followed in performing a certain operation. A performance specification states the precise result to be achieved or specifications on the other hand, specifies only the result to be achieved and leaves to the contractor the choice of equipment and method. Recent years have seen a trend in the use of performance specifications, particularly by government agencies. Specifications should avoid specifying both method and performance requirements for the same operation. When both are in mind, a clear and concise statement of the intended operation. When both are in mind, a clear and concise statement of the intended operation. When both are in mind, a clear and concise statement of the intended

Table 18–1 Organization of the uniform system for building specifications

Division	Title
1	General Requirements
2	Site Work
3	Concrete
4	Masonry
5	Metals
6	Wood and Plastics
7	Thermal and Moisture Protection
8	Doors and Windows
9	Finishes
10	Specialties
11	Equipment
12	Furnishings
13	Special Construction
14	Conveying Systems
15	Mechanical
16	Electrical

do not replace the contract drawings. Sketches are diagrammatic and materials, equipment, or workmanship of individual subcontractors are shown for approval prior to their incorporation in the project.

Department of Defense uses a similar system but requires separate specifications for submittals of shop drawings and samples. These separated divisions include:

- Identification of items requiring samples and data coverage
- Procedure for submittal of data coverage including [illegible] and [illegible] distribution of copies
- Procedure for submittal of samples including [illegible] number required
- Formatting the requirement for shop drawings and samples when standard catalog items are not used

18–5 CONTRACT ADMINISTRATION

Progress Reports and Payment

Construction contracts commonly require the contractor to prepare a proposed progress schedule to be approved by the owner's representative. Based on the approved schedule, this schedule forms the basis for judging the contractor's progress toward project completion. The contract may require the contractor to submit the data on schedule in the CPM format (Chapter 16), and may require periodic updating of the schedule as

work progress. The architect's representation must continuously establish the contractor's progress to support a certain in [illegible] and to provide a basis for the approval of the contractor's requests for progress payments. Failure of the contractor to maintain satisfactory record progress may provide the basis for termination of the contract, to the extent described later in this section.

For [illegible] contracts, [illegible] complex, it is [illegible] for the owner to make [illegible] payments [illegible] contractor. Progress payments are made at the [illegible] specified in the contract, usually [illegible] by an [illegible] [illegible] system, is [illegible] made for the work [illegible] the [illegible] [illegible] percentage of the value of [illegible] composed as a [illegible] [illegible] work and [illegible] the [illegible] [illegible] the contract. The [illegible] [illegible] [illegible] [illegible] [illegible]

Changes and Delays

[illegible] [illegible] [illegible] [illegible] [

[illegible] will be made. Any financial impact of such delay on the contractor's work will be borne by the owner. If the owner is responsible for the delay, such as by not providing equipment, the contractor shall be entitled to an additional cost plus a reasonable profit and a proportionate time extension to the contract. If the delay is under the control of the contractor, such as by not [illegible] extension is awarded to the contractor for it, the contractor is responsible for indemnifying the owner for any consequential or liquidated damages resulting from the delay.

Acceptance and Final Payment

The contractor's completion of the project is deemed to have occurred when performance by the owner's representative and conditioned upon the correction of the deficiencies noted. The list of deficiencies to be corrected, which is prepared at the end of the project, sometimes referred to as a punch list, is provided to the contractor. After fully and satisfactorily corrected to the architect's satisfaction, the owner's representative will execute a certificate of substantial completion and allow the work. The contractor may then request and receive a final progress payment for the completed portions of the project. The contractor's subcontractors may also be entitled to ensure the correction of the remaining deficiencies. The contractor's [illegible] should clearly state its responsibilities of the contractor for maintenance, warranty service, and insurance until final acceptance.

Upon completion of all deficiencies on the punch list, the contractor should notify the owner's representative of the final and exclusive request for final payment, together with any other documents required by the contract, such as receipts, releases, and affidavits of payroll and bills connected with the project. In addition, consent to release of final payment should be obtained from the sureties. When preparing and filing the application for final payment, the contractor should be careful to include all claims, disputes, and other matters in question. The contractor should be aware that failure to include a claim in the application for final payment may result in the waiver of the claim, or at least the contractor may be required to prove that the claim was not known or could not have been discovered by the exercise of reasonable diligence.

Claims and Disputes

A claim is a request by the contractor for an extension of time or payment of money for loss or damage arising from the performance of the contract, or for other relief with respect to terms of the contract. Examples of such claims include unexpected conditions, delays in delivery of materials or equipment, and changes directed by the owner. The contractor should promptly notify the owner's representative of any claim, and should keep a record of all costs and time associated with the claim. If the contractor is not satisfied with the decision, the matter may be subject to dispute.

Disputes between the contractor and owner may be resolved by mediation, arbitration, or litigation. Mediation is a voluntary process in which a neutral third party helps the parties reach a settlement. Arbitration is a binding process in which a neutral third party hears the evidence and makes a decision. Litigation is the process of filing a lawsuit in court. The contract may specify which of these methods is to be used, and may also specify the venue and the law that will be applied. The contractor should be aware of the statute of limitations for claims, which may be short, and should keep a record of all claims and disputes.

in the form of alternative dispute resolution (ADR) methods instead of taking the matter to court. Most successful, these methods generally result in a timely response in-house in settling disputes. Some ADR techniques include negotiation, mediation, binding arbitration, and non-binding. Traditional dispute resolution techniques are negotiation and litigation. The American Arbitration Association, together with a number of professional organizations, has worked to establish a formal procedure for the construction industry known as the "Construction Industry Arbitration Rules." These rules provide a set of procedures for professionals to be prepared to resolve the dispute. Hearing procedures are less formal than those of a court and are not governed by the legal rules of evidence. Because the parties to the dispute must agree to the use of arbitration, the speed of the arbitration process is usually possible. Still, because arbitration is a formal process, it is sometimes difficult to negotiate the terms of a contract clause requiring arbitration of all disputes arising under the contract.

Contract Termination

Although contract termination is usually considered an adversary process, there are a number of non-adversary methods by which a contract may be terminated. Most contracts are terminated upon the completion of performance, or upon the expiration of a contract's term. Other non-adversary methods of contract termination include the mutual agreement and impossibility of performance.

The classical adversary basis for contract termination is the breach of contract. If a party does not fulfill the contract's terms, the contract may be treated as terminated. The basis for termination by the contractor includes events of default, usually the failure of the owner to make the payments or perform the contract within a reasonable period of time. Termination by the owner for breach of contract is most commonly due to failure of the contractor to make reasonable progress on the project or default by the contractor. Other reasons for termination include breach of contract, or the owner's convenience is generally called for in the contract payment terms. Work performed prior to termination of the contract is considered complete, the project is taken over by the owner, or the contract is terminated by the owner. In the contract, contractors commonly have to face possession of the work site and other assets and other property owned by the contractor, and a right to the project or the contractor's property by convenience.

PROBLEMS

1. Briefly describe the ways the construction industry is accustomed to resolving disputes without litigation or court.
2. What are the legally essential elements of a construction contract?
3. Briefly describe the documents making up the construction contract.
4. What common alternative dispute resolution (ADR) methods are available for resolving construction contract disputes? What advantages do these methods have over court proceedings?

5. [illegible]
6. Briefly explain the advantages and disadvantages of each type of specification [illegible] (P. Alk. 5.
7. Briefly explain the legal basis for [illegible] and how are the property rights affected?
8. What type of [illegible] the process necessary for [illegible]
9. How are [illegible]?
10. [illegible] program that [illegible] to maintain the current status of all [illegible] of [illegible] [illegible] [illegible]

19

Construction Safety and Health and Equipment Maintenance

19-1 IMPORTANCE OF SAFETY

It has been reported that construction, which involves [illegible] of the U.S. work force, accounts for [illegible] of work fatalities and 12% of disabling injuries. [illegible] of all manual work (direct and indirect) of construction contractors has been estimated to exceed $17 [illegible] in the United States. In recent years, the frequency and severity of industrial accidents and health hazards led to the passage of the Occupational Safety and Health Act of 1970, which established specific safety and health requirements for virtually all industries, including construction. The Occupational Safety and Health Administration (OSHA) is responsible for developing and enforcing regulations implementing this act. The scope and nature of OSHA's construction rules is discussed in more detail in the remainder of this chapter. However, the numerous OSHA requirements and inspections has caused many contractors to take a more active role in safety management. Thus, construction management now is strongly concerned about safety. These reasons are summarized as follows.

Employers are interested in safety because it allows employees to work in a more productive and safe environment. Moreover, employers want to avoid the pain and suffering associated with accidents. Workers' compensation insurance premiums, [illegible] and health insurance premiums, [illegible] property damage, and equipment insurance rates are also influenced by accident rates. It has been [illegible] that [illegible] premiums [illegible] because of the [illegible] premiums resulting from poor safety records. In addition to the [illegible] of accidents represented by lost wages and workers' compensation claims, there are other costs, which are [illegible]. Such costs are associated with an accident including the monetary value of lost project time, [illegible] and damaged equipment, original, or once [illegible] and equipment and [illegible] of the project in directly involved in the accident.

19–2 OSHA

The U.S. Occupational Safety and Health Administration (OSHA) has produced a sizable [illegible] of safety and health regulations, inspection procedures, and record-keeping requirements. The law also establishes both civil and criminal penalties for violations of OSHA standards. While U.S. [illegible] provides for maximum penalties of [illegible] as shown in Table 19–1, civil penalties of $10,000 per day may be assessed for failure to correct a cited violation. Under criminal proceedings, a fine of $250,000 and imprisonment for 1 year may be adjudged for a second violation of a violation resulting in the death of an employee. OSHA officials may also seek a mandatory order through a U.S. District Court to stop work or even shut down a plant. In [illegible] cases, the [illegible] minimum penalty is [illegible] or both.

Under OSHA regulations, employers are required to keep records of all work-related deaths, injuries, and illnesses. It is not necessary to record minor injuries that require only first aid treatment. However, all injuries involving medical treatment, loss of consciousness, restriction of work or body motion, or transfer to another job must be recorded. A present report of a serious accident resulting in one or more deaths or the hospitalization of five or more employees must be made to OSHA within 48 hours.

One of the major insurances OSHA can not only [illegible] by [illegible] for safety violations, but [illegible] employees will [illegible] both OSHA and company safety regulations. [illegible] coming and [illegible] can be penalized under OSHA for any [illegible]. Therefore, [illegible] supervisor in both management may enforce safety regulations [illegible] disciplinary action [illegible] employees.

OSHA safety regulations [illegible] construction industry. Requirements for worker safety in [illegible] are covered by segments of the construction industry. Requirements for worker safety in [illegible] are covered by [illegible] and guards, [illegible] and [illegible] are also [illegible] operations. [illegible] a number of OSHA safety regulations [illegible] specific construction operations. However, supervisors [illegible] be familiar with [illegible] applicable OSHA standards.

[illegible] OSHA safety regulations [illegible] minimum [illegible] safety standards [illegible] the state. The U.S. Department of Labor has [illegible] OSHA regulations within [illegible] states.

19–3 SAFETY PROGRAMS

All construction [illegible] carefully planned and directed safety programs [illegible] accidents are [illegible] compliance with OSHA and other safety regulations. However, [illegible] safety program will [illegible] with [illegible] active support of top management. Individual supervisors [illegible] traditionally neglected safety [illegible] the job done [illegible] within budget. Only when [illegible] are convinced by higher management that safety is equally as important as production, will the benefits of [illegible] safety [illegible]

Table 19–1 Maximum penalties under OSHA.

Administrative Proceedings	
Violation	Maximum Penalty
Willful or repeated:	[illegible]
Failure to abate	7,000/day [illegible]
Failing to comply with posting requirements	7,000/day
Failing to post citation or post where violation occurs	[illegible]

Criminal Proceedings		
Violation	Maximum Fine	Maximum Imprisonment
Killing, assaulting, or murdering OSHA officials	[illegible]	[illegible]
Willful violation resulting in death of employee (first conviction)	[illegible]	[illegible]
Willful violation resulting in death of employee (second conviction)	[illegible]	[illegible]
Falsifying required records	[illegible]	[illegible]
Inadvertent violation resulting in death of employee	[illegible]	[illegible]

[illegible] effective safety program must [illegible] every employee.

Although there are many ingredients in an effective safety program, some of the most [illegible] are listed below:

1. A formal safety training program. [illegible] employee. [illegible] OSHA requirements [illegible] every employee to insure [illegible] in the recognition and avoidance of unsafe conditions and the regulations applicable to his work environment.
2. Periodic scheduled training for each worker.
3. A formal emergency safety training program for all employees.
4. A system of regular and frequent safety assessments to assess and correct hazards.
5. Provisions for appropriate personal protective equipment. This includes gloves, [illegible] protective personnel.
6. An established [illegible] by the emergency coordinator. [illegible]
7. Provisions for maintaining safe [illegible] in compliance with OSHA [illegible].

The [illegible] of the Occupational Safety and Health Administration [illegible] 9, provides many suggestions for an effective occupational safety program.

Minimizing Insurance Cost

As a rule, a construction contractor's cost of insurance is largely determined by the insurance company's accident experience. Some of the factors considered by an insurer in evaluating the risk involved in providing insurance coverage for a construction company include:

- The company's record of accidents and safety violations
- Scope of the company's safety program, including training of employees, use of qualified personnel, well-defined job duties and responsibilities, enforcement of a company safety plan, and continuous site inspections, the presence of accident-free crews, and adequate and the use of personal protective equipment
- Incentive programs, such as bonuses, prizes, or equipment maintenance

Some indicators of an inefficient, risky construction organization include:

- Failure to fulfill the minimum safety procedures standards discussed in Section 19–4.
- Poor housekeeping at the construction site.
- Failure to use necessary personal protective equipment.
- Excessive injuries and worker illness, particularly on hazardous operations.
- High rate of employee turnover.

19–4 SAFETY PROCEDURES

It has been found that most serious injuries and illnesses involve unsafe use of equipment, such as crane, hoist, and scaffold failures, falls from elevated positions, collapse of temporary structures or trenches, and the failure of contractors to take precautions. OSHA safety regulations include minimum standards specific to many of these and other hazardous operations and provide for the establishment of safeguards for these activities.

Appendix 2 provides a checklist of safety with examples of construction hazards, including basic, and more detailed, potential. The safety manual published by the Associated Equipment Distributors, which includes standards for the Construction Industry Manufacturers Association (CIMA) members, provides safety rules and suggestions for the operation and use of many types of construction equipment.

Many safety measures are forgotten if they are stated in a manual or have been discussed in previous chapters. In addition, the following basic safety procedures should be helpful as a general guide.

General

Good housekeeping on a project helps prevent accidents and injuries. Keep the site free of debris and pick up scrap lumber. Lumber with nails in it, wire, and rubbish lying on the site make it dangerous for workers. Nails and pieces of wire can puncture workers.

Equipment Operations

- Require operators and mechanics to use steps and handholds when mounting equipment.
- Utility equipment operators must be qualified and certified as required by law. Where there is danger of nearby workers, lifting cranes or aerial lifts, have a second employee on the ground to warn.
- Operators must be trained and certified to use equipment safely. Do not let unauthorized people ride on equipment. Do not allow the operator to move the equipment except to back up. Instead, the operator should get down from the equipment and lead it. Do not let people ride on the equipment.
- Most construction equipment must be equipped with required safety features and protective devices. Do not bypass safety devices.
- Do not exceed operating or manufacturer's slopes to prevent overturning.
- When operating, make all commands clear and distinct. Do not allow blind lifts or operations unless a spotter is present. Establish hand signals and provide.
- Do not allow workers to be around or under equipment during operation.
- Fill fuel tanks properly to prevent spills to the ground. Do not fill fuel tanks while equipment is running or hot. Wipe up fuel spills, slippery surfaces, and clean dirty, oily, flammable wastes. Do not use gasoline to clean parts. Use approved solvents and degreasers.
- Park equipment with the brakes set, locked in level position, and blocked or secured against other equipment.
- Equipment used for land clearing must be equipped with roll-over protection. Make sure the operator is protected from the elements as well and complies with requirements in the OSHA standard for such hazards.
- When building roads or excavating for roads, place warning signs, make sure the roads are properly sized and maintained for safety. Slow moving and oversized vehicles may need required escorts or signals to control the traffic.
- Take precautions when moving equipment under power lines. Do not allow it to be accidentally operated.
- Utilize blocking or shoring when necessary to prevent upset when employees are working in or near trenches. Do not use bricks, jacks, or hydraulic systems.
- Ensure that the proper safety devices are in place during equipment operation and properly secured.
- Stand back from the equipment when operating during repairing.

Construction Plant

- Set equipment containing hot or flammable fluids on fire-resistant pads to prevent overturning. Clean and keep equipment free of combustible materials. Be especially careful in storerooms. Provide the appropriate fire extinguisher and other required safety equipment.

- Aggregate hoppers, batching plants, and loaders must be inspected before performing any work.
- When electrical equipment is being repaired, short circuiting electrical circuits.
- Inspect [illegible] equipment and vehicles for proper size and capacity, well maintained, and inspected at least weekly.

Excavations

- [illegible] underground utilities and other hazards must be located and flagged before starting an excavation. Contact utility companies the property owners to request that they locate their underground utilities. Also call the 811 state-[illegible] Call Before Dig telephone numbers, which connect with many companies to provide prompt service in locating and marking their underground lines when requested. When utility companies or owners fail to provide the information in a timely manner within 24 hr, the contractor may continue to proceed with excavation. However, in this situation the contractor must employ [illegible] other precautions to avoid underground hazards.
- The sides of excavations must be properly sloped or shored to the angle of repose to prevent cave-ins. OSHA regulations require that banks over [illegible] be sloped or shored back to a safe slope, or the sides protected. Regulations also require that protective systems (sloping, benching, shoring, or shielding) for excavations over 20 ft deep must be designed by a registered professional engineer.
- When workers are required to enter excavations 4 ft (1.220 m) or more in depth, adequate safe means of egress must be located in such a manner that no more than 25 ft (7.6 m) of lateral travel is required to reach the exit.
- Avoid placing materials or equipment near the top edge of an excavation because the increased weight can cause a cave-in. The strength of most soils near the top edge of an excavation is reduced and the presence of water also increases the chance of a cave-in. When these conditions cannot be avoided, additional measures must be taken to increase slope stability. In addition, no equipment or materials may be closer than 2 ft (0.61 m) of the edge of the excavation.
- Ensure that workers are not allowed under loads being handled by excavation equipment.
- Ensure that workers are protected from [illegible] when excavating. Possible hazards include [illegible] and flammable gases, electricity, and cultures [illegible] specimens. Provide [illegible] equipment to remove and haul the material quickly as possible. Take [illegible] to control the dust [illegible] and [illegible] a fire.

Construction of Structures

- Properly ground [illegible] equipment and tools.
- Provide [illegible] for [illegible] and [illegible] [illegible] OSHA standards.

- Ensure that temporary structures are properly designed, erected and maintained.
- Special consideration must be exercised in high seismic construction. Forms must be braced against seismic and other dynamic loads. The use of guy wires for vertical or horizontal bracing and shoring must be adequately supported and tied down to prevent buckling of the concrete and development of excessive deflection.

Marine or Over-Water Construction

Marine or over-water construction operations present additional hazards to workers in the form of potential falls into the water, drowning, and exposure to weather. Several additional hazards include the use of spud barges, floating equipment, heavy hoisting, and work on or near the water. Some of the safety precautions are included in the following list, which includes:

- Provide workers with safety approved vessels, a rescue boat, life jackets, and life rings. Provide access to water for lowering injured, or dead, from the water, and provide a means of rescuing the loads.
- Working decks should have non-slip surfaces, be maintained free of debris, and be equipped with adequate railings.
- Provide an adequate and safe means of access to and from the equipment, especially if the equipment is not accessible from the shore. Workers must be provided with safety belts, lifelines, and harnesses when working above water and be provided with safety belts, lifelines, and harnesses when working on floating equipment.

19–5 ENVIRONMENTAL HEALTH IN CONSTRUCTION

Hazardous conditions in construction work have been recognized by OSHA in recent years and have been addressed in standards. The major hazards include noise, heat, pollution, and exposure to toxic materials, lead and asbestos. These standards and specific control measures are discussed in the following paragraphs.

Noise

OSHA's construction safety and health regulations prescribe maximum noise levels to which workers may be exposed. Permissible noise levels are based on the length of exposure and range from 90 dBA for 8 hours to 115 dBA for 15 minutes or less. Hearing protection must be provided when noise levels cannot be reduced by engineering controls, personal protective equipment must be provided.

Noise control can be accomplished by reducing noise at the source, using quieter equipment or better equipment operation, or equipment maintenance. The noise at the source can be reduced by using equipment with mufflers, or by using equipment with better operating properties, such as better balance of the equipment's moving parts. Although the use of water enclosures provides a good

[illegible] environmental [illegible] It is difficult for workers outside the enclosures to communicate with the environment operator. As a result, [illegible] hazards and hard signal [illegible] are to be posted.

Dust

[illegible] hazard due to [illegible] may be [illegible] particularly dangerous [illegible] [illegible] OSHA [illegible] [illegible] which [illegible] [illegible] hours per week [illegible]

Radiation

[illegible] [illegible] [illegible] [

[illegible]

Methods for measuring heat exposure include [illegible] physical observation and [illegible] for measurement of the [illegible] of [illegible] [illegible] [illegible]

Preventive Maintenance

Preventive maintenance is sometimes defined as a [illegible] routine repair and replacement program designed to keep equipment in the best possible operating condition. It consists of a variety of elements that may be common to many companies. The primary [illegible] in the field is to minimize the drift of the [illegible] from which the equipment is used, proper care, handling, proper equipment [illegible], and [illegible] particular adjustment. Unless the [illegible] of this chart [illegible], the result will be premature equipment breakdown.

Equipment manufacturers have developed specific information, [illegible], and equipment procedures for each piece of their equipment. These procedures should be carefully followed. [illegible] equipment [illegible] operating conditions. While [illegible] equipment, [illegible] and operating [illegible] depends on many conditions. Lubrication using hand [illegible] power grease guns, [illegible] systems [illegible] available for [illegible] equipment. [illegible] lubrication systems consist of a pressurized grease pump connected by springs or equipment [illegible] points. A central [illegible] of lubricant is [illegible] equipment [illegible] for the original [illegible]. Some advantages claimed for conventional lubrication systems include

- Increased productivity [illegible], the time lost for work [illegible]
- Reduced [illegible]
- [illegible] as a result of operating [illegible] and [illegible] equipment and [illegible] for the need [illegible]
- Reduced grease consumption since there is little waste [illegible]
- Increased safety because [illegible] the equipment [illegible]

Because of the [illegible] equipment operation, it is important to have [illegible] engineers in the mechanical [illegible] of the equipment. [illegible] to keep fuel clean and to keep [illegible] fuel tanks [illegible] properly. Some precautions [illegible] include the following:

- [illegible] possible. If [illegible] be used, allow [illegible] for [illegible] and [illegible].
- [illegible] should be located away from [illegible] should be [illegible] from the bottom of the tank.
- [illegible] be used to [illegible] the [illegible] and [illegible] removed [illegible].

- Discharge equipment should be equipped with filters and other services to remove any particles in the process. Close nozzles and the mixer should be equipped with a special hood or cover in the shape of the hopper.
- Pneumatic conveyors should have a system of specially shaped pipes to reduce wear in the sets during the bends. This is especially important during the transport of abrasive materials.
- Dust suppression should be taken into account in the form of distributors and pipelines, using gaskets and hermetic seals to reduce dust emissions. The amount of dry substances should be kept to a minimum.
- Avoid unsafe equipment in the form of cracks, crushing, crushing, and wear and tear.

Dust is a serious problem in many industries, including the construction industry. Air cleaners must be installed in the workplace, and equipment manufacturers must provide information on how to properly use and maintain filters. Dust filters should be replaced when they are clogged, or if they show signs of damage. Dust filters should be cleaned with a vacuum cleaner or other tools.

When using dust before blasting, it is necessary to carry out a pre-clean. The cleaning system in the workplace should be free of any polluting substances, but it must be replaced as soon as the blasting equipment is operated. When cleaning the surface of the filter, it is necessary to use a filter and a special device for cleaning the filters. If there is no need to remove the dust from the overall environment, it is necessary to use a special, non-transparent, sheet to block the dust. Air pressure, and basic special tools, such as a hood or other tools, should be provided in order to prevent the ingress of dust into the system. Use the special hood of the filters and filters. The system should be provided frequently to leaks. Air cleaning, as well as the system, will cause high pressure and a lot of cleaning noise.

Air analysis involves conducting of periodic sampling and laboratory analysis of equipment. Air samples are supply because of an area. Air pressure is based on spectrometry and physical research to determine the presence of metals, suspended and other physical substances found in the atmosphere. It has been found that the oil and other gas emissions from the environment can be expected to be in the form of vapor particles and aerosols. Thus, all analysis provides information given on the overall condition of the air. The main purpose of conducting a study is not based primarily on the overall results should be a single line, but rather on the deviation from the equipment's standard. Dust filters type should be based on the specially manufactured equipment and must be provided with a set of measures to fit the dust filters and any dangerous potential to have contact to contamination. The dust should be in the form of a fine powder.

Many of the techniques or methods of construction equipment are used to prevent the emission of dust and to reduce the dust to a minimum. Dust is generally considered to be a serious health hazard in the workplace. Dust is generally specified in the appropriate regulations. Excessive dust can cause many diseases, such as, cancer, and other diseases. The dust should be removed by a dust cover in the space of the workplace. A lower weight of dust is required for workers to be able to work in such a way of energy.

PM Indicators

Potential problems indicative PM indicators are conditions which may be noticed during routine equipment inspections and provide a guide to the maintenance condition of the equipment. Although a number of these indicators have been developed for specific equipment, the following are potential indicators:

- After the equipment has been standing idle for several hours, check on the ground for grease, oil or other spots that will indicate leaks.
- Make a visual inspection of the equipment for damaged, missing, loose or worn parts or any unusual wear.
- Check belts for proper tension. Check belt for cracks and tears, looseness, wear and fraying.
- On chain type equipment, check the chain for proper tension and loose chain links. Chain links fully lubricated so there is a thin film of lubricant on the chain and if dirt is present, wipe off the chain links before lubricating. Modern equipment is usually shipped with adjusters which are removed when operation. These adjustments are made on the job and are used to tighten the chain during operation. The understanding that the equipment frame gives the chain an debris to prevent loss of power and unnecessary chain wear.
- Make sure that the radiator is free of debris and that the radiator core openings are open. Fan belts and other drive belts should be in good condition and properly tensioned. Damaged belts may be replaced by checking adjustments, simply loosening or removing belts.
- Make sure that fuel, oil, hydraulic fluid and water are in their proper levels. Coolant should be checked for proper level and proper operation.
- Ensure that fuel is clean and free from water and sediment.
- Check the cutting edge and blades are sharp, not properly operating and the mulching fan is free of rocks and broken pieces.
- Ensure that the operator's floor is clear of hazards and free of mud and oil.
- Check that the battery is secure and terminals tight. Battery cables should not be chafed and connections should be good.
- Adjust seat and controls as needed.
- Check tires for proper inflation and check the condition of treads and sidewalls. Improper inflation is the most common cause of tire problem or direct.
- Check for dirt, grease, oil, etc. from the engine after the engine has warmed up. Smoke exhaust may indicate a problem with the fuel system, the injectors or the air filter.

Equipment Maintenance and Repair

Maintenance is a key part of specific maintenance and repair procedures is key. See specific sections. A manufacturer's manual for equipment in the area is a must. This is best. Should contain equipment components and instructions. Make sure to follow all the

[illegible] and repair hours to [illegible] of [illegible] (MTBF) [illegible] equipment [illegible] of [illegible] equipment life of [illegible] years. This finding [illegible] [illegible] While the equipment investment increases the overall [illegible] investment, the increased [illegible] operation often reduces the equipment's overall maintenance and repair costs. Purchasers should [illegible] [illegible] the overall [illegible] [illegible] and downtime of equipment using [illegible] [illegible] [illegible]

Maintenance Organization

Because of [illegible] [illegible] [illegible] [illegible] [illegible] facility [illegible] [illegible] service [illegible] Service is usually performed [illegible] [illegible] [illegible] [illegible] [illegible]

7. [illegible]
8. [illegible] program
9. [illegible]
10. [illegible]

REFERENCES

1. [illegible] Inc., [illegible], DC
2. [illegible] New York: Wiley, [illegible]
3. [illegible] Washington, DC
4. [illegible] Washington, DC.
5. [illegible] Wilmington, [illegible]
6. [illegible]
7. [illegible] 2nd ed. [illegible] New York: McGraw-Hill, [illegible]
8. [illegible] Department of Health, Education and Welfare, Washington, DC, [illegible]
9. [illegible] Washington, [illegible]
[illegible] ASCE, [illegible]

20

Improving Productivity and Performance

20-1 THE BIG PICTURE

State of the Industry

The Business Roundtable's Construction Industry Cost Effectiveness (CICE) study described in Chapter 1 concluded that the U.S. construction industry consists mostly of [illegible] firms, competitive in the international construction market. However, [illegible] are characterized by industry practices which [illegible] by improved management of the construction effort. A [illegible] project management practices, the study discovered, [illegible] performance in a number of areas. These include: [illegible] of [illegible] of overtime, [illegible] and [illegible] and [illegible] and [illegible] sessions. Thus, the purpose of this chapter is to [illegible] ways in which construction managers can improve construction productivity and performance.

What Is Productivity?

There is serious disagreement about the proper measure of the term "productivity" within the construction industry. Accounting employs [illegible] the output of construction [illegible] services per unit of an input. Obviously, such a reduction is due to the contribution of [illegible] and capital investment to the increased productivity. The study on construction [illegible] the industry has [illegible] the use of larger and more mechanized [illegible] equipment can increase productivity and have a [illegible] production cost in the face of growing [illegible] labor and material costs. The [illegible] of [illegible] productivity [illegible] would [illegible] that new technology such as robotics and [illegible] will [illegible] significant [illegible] in the [illegible] distant future.

Industry-wide measures of construction industry performance are [illegible] issued by the Business Roundtable's CICE study. However, for the purpose of this chapter we will use the narrower definition of productivity as an input performance index of a firm and focus our attention on cases in which construction industry practitioners can be [illegible] to improve management.

Tools for Better Management

A number of studies, including the [illegible] study, have shown that [illegible] are [illegible] as well as the [illegible] of management. Management is concerned with [illegible] organizations, [illegible] the [illegible] management to provide the [illegible] [illegible] [illegible]

[illegible]

Traditional work measurement techniques [illegible] in more detail in the following chapter. Include time studies, work sampling, predetermined motion time systems, and [illegible].

Time Studies

Time studies are used to establish a standard time for a job. Time study is the purpose of the determination of the amount of time required to perform a job. [illegible] Time data collected are usually [illegible]. Human [illegible] performance is usually analyzed in relation to the time [illegible] observation. The number of observations required to achieve a desired validity depends on the type of study being [illegible]. For time studies, the number of observations required depends on several factors, the [illegible] and [illegible] the number of observations required depends on the variability of the [illegible] and the [illegible] of precision of the [illegible].

Work sampling is a method for a time study [illegible] the purpose of determining the level of activity of a operation. A study of [illegible] operational operation by randomly identifying and recording a number of [illegible] and [illegible] of activities or non-working. The number of [illegible] divided by the total number of observations will yield the level of activity. The [illegible] of a work sampling study will provide information to management of [illegible] and [illegible].

The types of work sampling performed [illegible] observations [illegible] in [illegible] work sampling [illegible] and [illegible] the level of activity [illegible] a large workforce. [illegible] the selected [illegible] observations and [illegible] intervals [illegible] the number of observations required [illegible] the number of observations [illegible] the level of activity [illegible] need [illegible] to measure the level of activity [illegible] the [illegible] of [illegible] [illegible] the [illegible] working [illegible] the [illegible] the [illegible] working.

Sampling for labor [illegible] may also divide observations into categories. Some common categories used include [illegible] work, [illegible] work, and [illegible]. Analysis of work by category will [illegible] information [illegible] activity levels [illegible] being utilized and [illegible] work [illegible] effectiveness.

Although time [illegible] is a traditionally more [illegible] approach to [illegible] work, there is [illegible] [illegible] the [illegible] purpose. The [illegible] equipment for conducting work improvement studies [illegible] purposes. Besides [illegible] equipment [illegible] [illegible] activity [illegible] be [illegible] [illegible] information [illegible] historical records [illegible] activity [illegible] may be useful [illegible] managers [illegible] as well as [illegible] [illegible].

Flow Process Charts

A flow process chart for a [illegible] activity records the same process as does a flow chart for a [illegible] diagram. But it differs from the flow chart in that it lists the [illegible] of [illegible] steps (classified as operations, transportations, inspections, delays, or storages). Depending on the level of detail, it usually includes the distance and time required for each [illegible] and the [illegible] required for each operation, inspection, or delay. For [illegible] the [illegible] should be adequate to describe the entire process and to tabulate the number of operations, transportations, inspections, delays, and storages involved and the time required for each category.

To prepare a flow process chart (see Figure 10–11), first [illegible] a form [illegible] by writing the appropriate symbol in [illegible] column. Then [illegible] the data into the [illegible] for each step. Figure 10–[illegible] illustrates a flow process chart for the assembly of the [illegible] in Figure 10–2, using the process of two workers and a forklift. The [illegible] of the process is determined by the time required [illegible] the [illegible] can be performed [illegible]. This [illegible] the [illegible] [illegible] by [illegible] [illegible] that [illegible] [illegible] activities to be [illegible] and [illegible].

After preparing a flow process chart, it should be analyzed and revised to reduce the number of operations, movements, storages, and delays, as well as the overall time required. Charts can also be used to describe the process. Ask yourself: Is it necessary to do everything shown in the chart, and in the most efficient manner? How can it be done faster and better?

Layout Diagrams

A layout diagram is a scale diagram that shows the location of all physical entities in a facility, such as machines, workstations, storage areas, and aisles. For a manufacturing facility, a layout diagram might include the location of equipment, machines, and workstations, as well as the flow of materials and people. A layout diagram can also show the path followed by the worker or material handling equipment in a flow process chart. The flow diagram should indicate the direction of material and [illegible] where delays occur. Such a diagram [illegible] a flow process chart.

It should be apparent that flow process charts, flow diagrams, and layout diagrams must be studied together for maximum benefit. [illegible] layout diagrams and flow diagrams are [illegible] to visualize the operations described in the flow process chart. These diagrams should suggest jobs that might be combined, storages that might be eliminated, or [illegible] that might be [illegible]. The objective is to [illegible] the most efficient [illegible] that can be [illegible] within [illegible] constraints.

Crew Balance Charts

A crew balance chart is a graphic [illegible] to indicate the activities of each member of a group of workers as the complete cycle of an operation is [illegible] to improve the time of each crew member during the cycle. The term "crew" [illegible] to a group

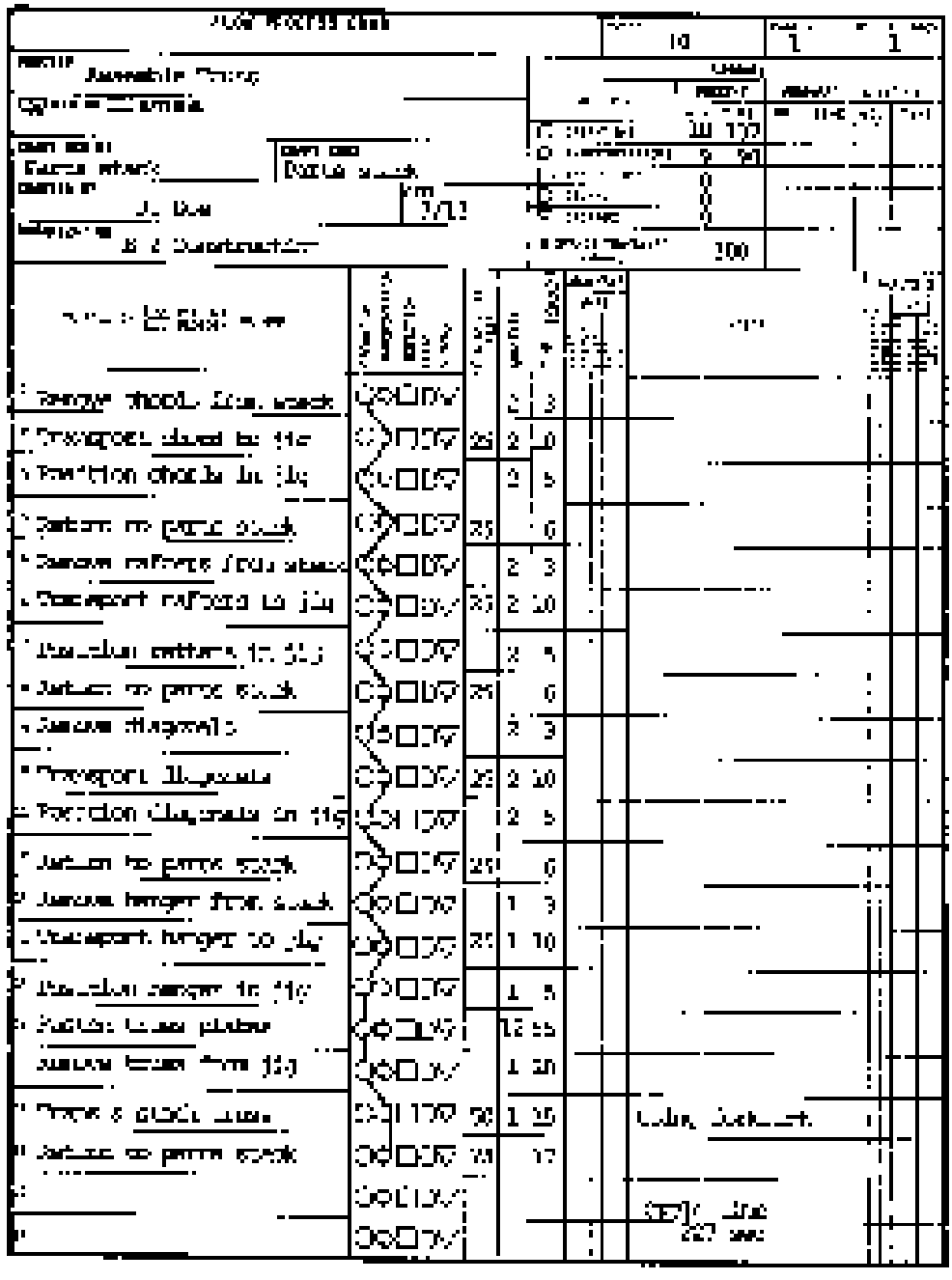

Figure 20–1 Flow process chart

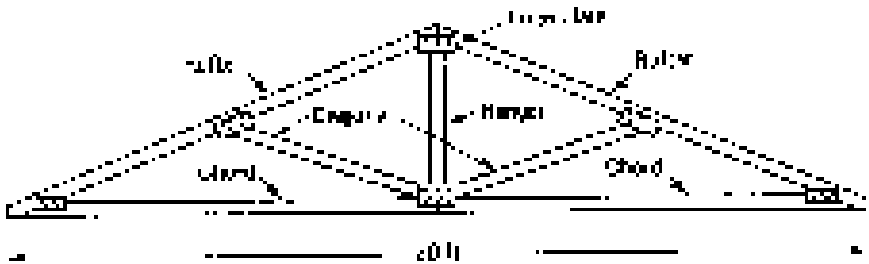

Figure 20–2 Roof [illegible] diagram

[illegible] spent by [illegible] crew members [illegible] activity which occurs during the cycle. The usual convention utilizes similar [illegible] to indicate the level of activity during each [illegible]. The darker the color, the higher the level of activity. Thus, excessive work might be shown by [illegible] time by a white [illegible]. As the name indicates, [illegible] studies usually [illegible] the level of activity of [illegible] workers in a specific cycle. [illegible] suggest [illegible] work in rapid [illegible].

A [illegible] of the [illegible] of Figure 20–2 is illustrated in Figure 20–3. [illegible] has been increased [illegible] instead of the four [illegible] in the [illegible] of Figure 20–1.

[illegible] charts are [illegible] Charts [illegible] both crew [illegible] machine utilization [illegible] activity [illegible] work [illegible].

Human Factors

[illegible] is important [illegible] in the [illegible]. Workers who are [illegible] work [illegible] level of [illegible]. Some of [illegible] considered [illegible] physical [illegible], work [illegible], and worker morale and [illegible] work in [illegible] in Chapter 13.

[illegible] in assessing [illegible] of physical [illegible] on [illegible] that the [illegible] of human energy expenditure [illegible] work [illegible] work [illegible] physical [illegible] work [illegible] physical [illegible] work [illegible] by [illegible] work [illegible] by [illegible] work [illegible] work [illegible] work

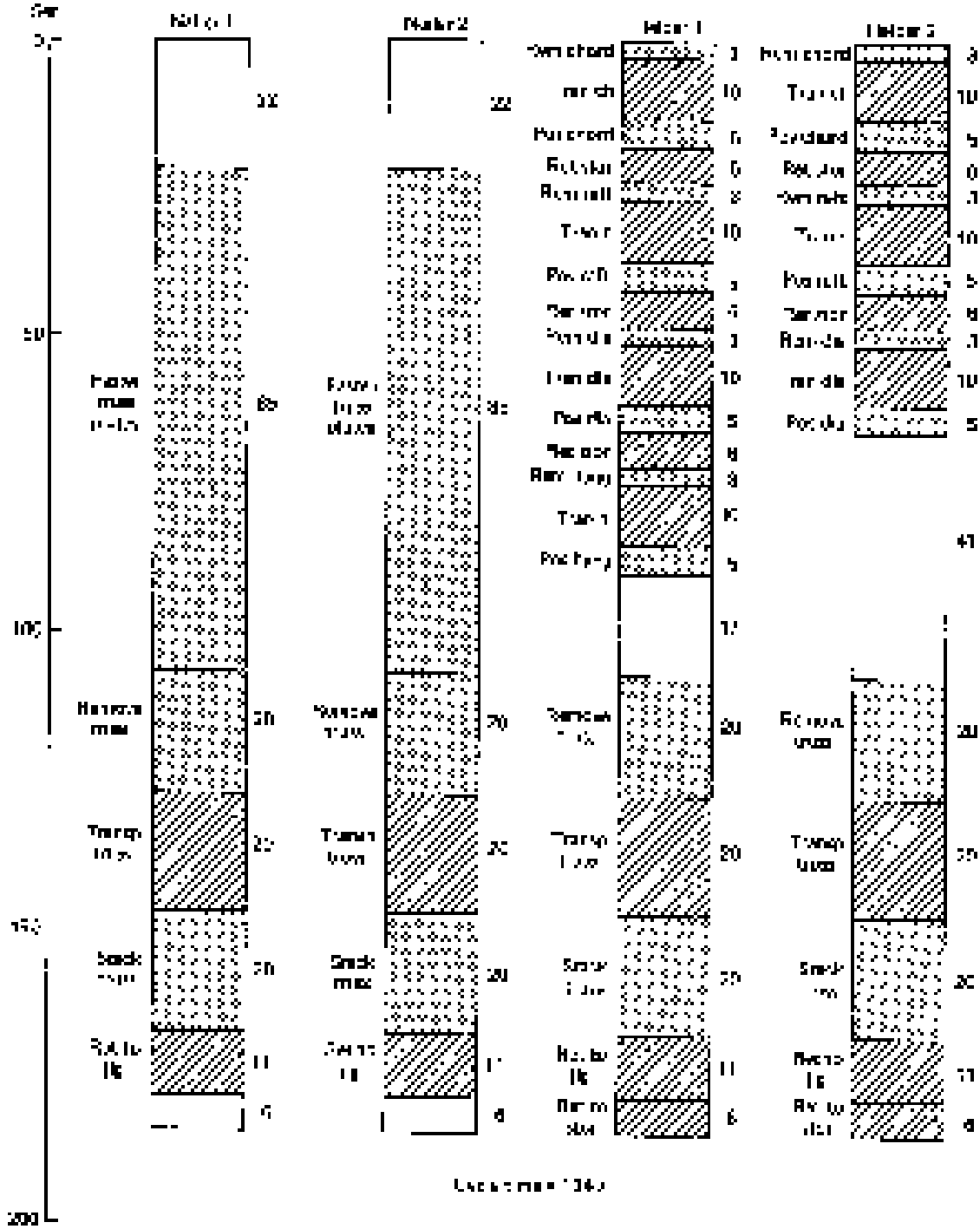

Figure 20-1 Crew sola co chart.

Studies based on data from U.S. have shown that worker productivity is seriously affected by successive periods of overtime work. In general, a 40-hour workweek appears to be the optimum for U.S. construction workers. When construction workers are put on an extended overtime basis, productivity usually does not fall in the first week, but it does decrease during the following weeks, and continues to decline until it finally levels off after about 3 weeks. When a crew on continuous overtime work, worker productivity per week is initially higher than during a normal 40-hour week. However, as productivity continues to decline, there is a point in a 50 hour or 60 hour work week at which it falls below that of a 40-hour week. When the premium rate of overtime is considered, it is important that the labor cost per unit of production will always be higher for overtime work than for normal work. As the length of the overtime period increases, the cost differential increases even more. For example, if the hourly pay rate for overtime work for a 60-hour week is 150% of the normal rate, the labor cost per unit of production for a 60-hour week will be more than 40% higher than for a 40-hour week.

Worker morale and motivation have also been found to be important factors in controlling worker productivity. In studies of 20 major power plant construction projects, Rechelting and Oberlender found that the factors inhibiting craft productivity on these projects of the person-to-person variability of unskilled workers, the lack of supervisory ability, the lack of motivation, the lack of overtime work, delays in the organization, craft turnover, absenteeism, changes in scope, and interruptions of work were greater than in other productivity factors. However, these factors were much less significant than were the first three factors listed above. The study also showed that the number of supervisors, craft turnover, worker motivation, and absenteeism were more pronounced than expected. Low labor productivity proves tended to have a significant impact on worker motivation and to lower morale. It appears from the study that the presence of worker dissatisfaction has more effect on productivity than does the presence of other disruptions. Some of the factors mentioned by the study included:

- Disrespectful treatment of workers.
- Lack of sense of accomplishment.
- Non-skilled "level" supervisors.
- Necessary overtime work.
- Disharmony in crew makeup.
- Congestion on the project.
- Lack of recognition for accomplishments.
- Poor matching of worker skills.
- Inconsistent personnel.
- Lack of cooperation between crafts.
- Unreasonable work rules.
- Poor incentive programs.
- Inadequate communication on the overall project structure.

- Good working conditions
- Worker involved in decision making

Some of the work motivators determined to be small include:

- Good relations between workers
- Good worker credibility programs
- Good safety programs
- Fair pay scales
- Good pay
- Recognition for accomplishments
- Well defined goals
- Well planned projects

20-3 QUANTITATIVE MANAGEMENT METHODS

The science of management methods is a relatively recent development, previously called operations research. As World War II approached, research techniques began to be employed by military planners to improve management of resources by optimizing some problem and constraint. Generally, these techniques deal with finding optimal methods to achieve a desired goal or maximize some overall measure of effectiveness. Although a number of problem solving techniques are available, linear programming by far is most widely used for management purposes. In this section we consider skills that relate to linear programming to determine optimum.

Linear Programming—Graphical Solution

As the name implies, all relationships considered in linear programming must be linear in nature. To apply linear programming, it is necessary to have a clearly defined objective function and a linear cost or profit function which is to be minimized or maximized. We consider the graphical solution technique that may be employed when only two variables are present. Unfortunately, most problems encountered in practice involve more variables, but the nature of the solution procedure is the same. As you recognize, it will be impossible to make a graphical procedure for each problem involving more than two variables.

EXAMPLE 20–1

A project manager for a large manufacturing project is faced with the task of selecting the drivers to be used in a massively parallel processor. The project manager is able to use the equipment division machine that holds twenty medium drivers available for the project. However, only 10 large drivers are available. The supply of medium drivers is relatively unlimited. Because of limited manufacturing capacity, a maximum of 100 drivers

[illegible] The [illegible] and [illegible] [illegible] in [illegible] [illegible] and [illegible] [illegible]

Dosage	Weight (tons)	Production index
Heavy	30	[illegible]
Medium	[illegible]	[illegible]

SOLUTION

We [illegible] the [illegible] [illegible] [illegible]

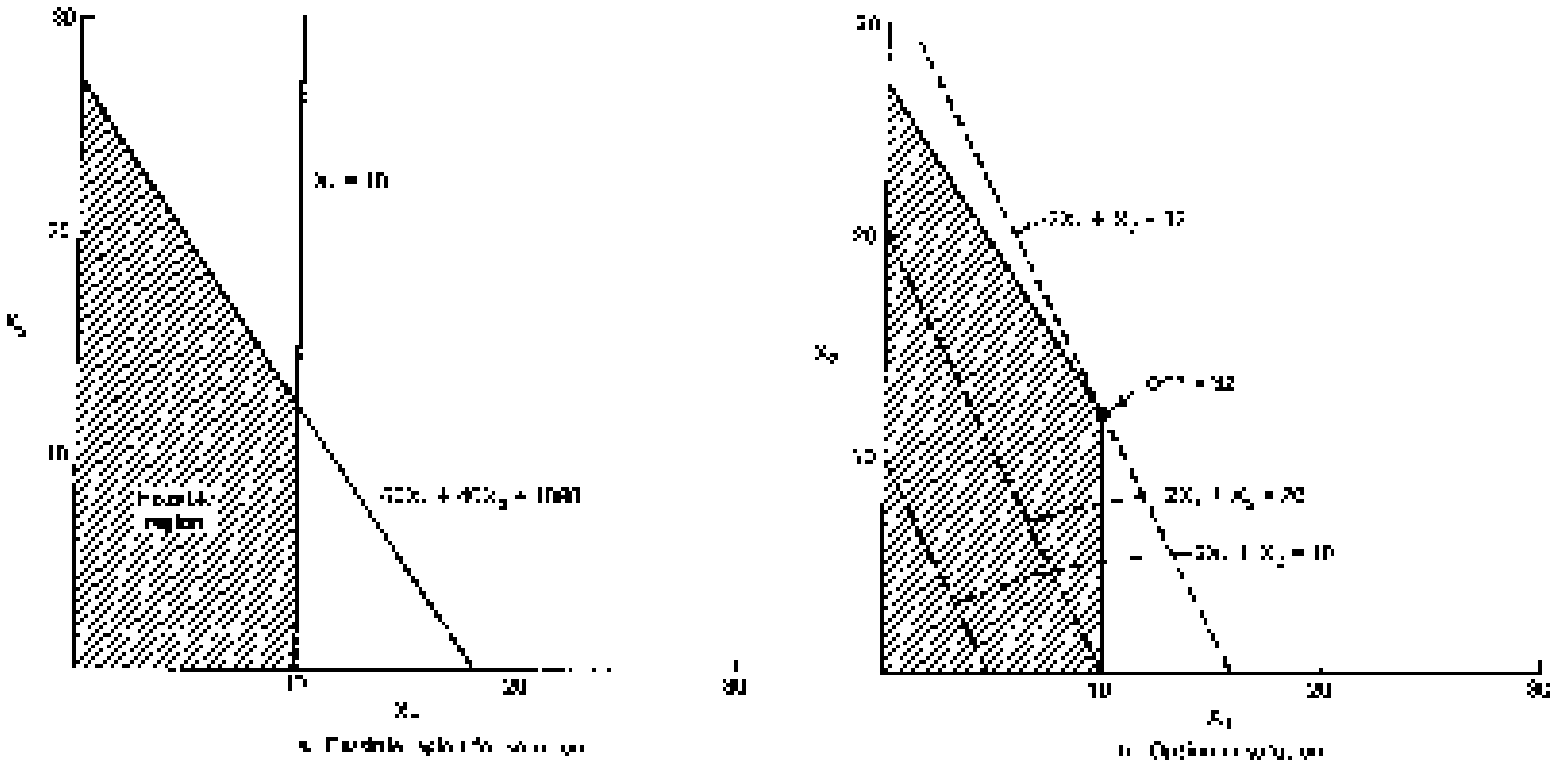

Figure 20–4 [illegible] solution of Example 20[illegible]

[illegible]

$$x_1^* = 10$$
$$x_2^* = 10$$
$$OF = 32$$

As the reader can see, this very simple problem could easily be solved by analytical procedures. However, for more complex problems, linear programming usually provides a much faster and simpler solution procedure. [illegible]

Computer Solution

Since the proposed solution approach can be used for the problem involving more than two variables, [illegible] computer solution is sought. Amount to [illegible] linear programming problem. However, the procedure is conceptually [illegible] and therefore [illegible] the solution of small problems. Moreover, computational aids or techniques are available [illegible] solve large-scale linear programming problems involving hundreds of variables and constraints.

[illegible] availability of microcomputer software for solving linear programming problems, we have [illegible] the discussion of the formulation of a linear programming problem [illegible] objective function. [illegible] belong to a feasible region. In addition, [illegible] computer program will [illegible] useful in [illegible] solution. [illegible] computer program [illegible] required to generate a number of variables, number of constraints, and whether the objective function is to be maximized or minimized. [illegible] the coefficients of the objective function [illegible] the constraint equations [illegible] the right-hand side constants. Finally, the coefficients of the variables in the objective function are entered. The computer program will then [illegible] the optimum value of the objective function [illegible] the optimum values of the decision variables. A computer solution [illegible] for the problem of Example 20-2 is shown in Figure 20-3.

EXAMPLE 20-2

According to [illegible] the work schedule for the following week. In addition to [illegible] the production [illegible] customer [illegible] with an additive. The use of the additive [illegible] reduces [illegible] finishing time but increases the time required for production. [illegible] indicate that the customer will accept a specific 5-pound lot for the standard product and 3 pounds for the additive product. Normally, [illegible] of the

```
THE FOLLOWING LINEAR OPTIMIZATION MODEL WILL BE MAXIMIZED

THE OBJECTIVE FUNCTION =      [illegible]

SUBJECT TO THE FOLLOWING CONSTRAINTS

      [illegible]      [illegible]   <=   [illegible]
      [illegible]      [illegible]   <=   [illegible]
      [illegible]      [illegible]   <=   [illegible]

THE FEASIBLE SOLUTION FOUND AFTER      [illegible]      ITERATIONS

    ITERATION      3          OBJECTIVE =      0
    ITERATION      4          OBJECTIVE        [illegible]
    ITERATION      5          OBJECTIVE =      [illegible]

VARIABLES IN THE SOLUTION

    VARIABLE       2          AMOUNT =         [illegible]
    VARIABLE       1          AMOUNT =         [illegible]

VARIABLES OUT OF THE SOLUTION

BINDING CONSTRAINTS

    CONSTRAINT     3          SHADOW PRICE = 0
    CONSTRAINT     1          SHADOW PRICE = 0

SLACK CONSTRAINTS

    CONSTRAINT     2          SLACK =          [illegible]

THE OPTIMUM OBJECTIVE FUNCTION IS      [illegible]
```

Figure 20.5 Computer solution of Example [illegible]

[illegible] this packet. However, [illegible] work. [illegible] per [illegible] will [illegible] [illegible] [illegible]

SOLUTION

From the [illegible] of these equations it is determined that 50 [illegible] man-hours, [illegible] man-hours, and 150 [illegible] are available each week. We will let X_1 represent the quantity of plain concrete to be poured and X_2 represent the quantity of reliable concrete. Hence the model constraints and objective functions are as follows.

Constraints:

$$[illegible] + 0.31X_2 \le 50$$
$$\text{cost } X_1 + [illegible] X_2 \le [illegible]$$
$$0.12X_1 + 0.22X_2 \le 150$$

Objective function:

$$\text{maximum } 470X_1 + 300X_2$$

The optimum solution, shown in Figure 20-5.2

$$X_1 = 188.88 \text{ [illegible] (plain concrete)}$$
$$X_2^* = 187.93 \text{ [illegible] (reliable concrete)}$$
$$OF^* = \$[illegible] \text{ profit}$$

[illegible] shown on the facing page indicate the profit by which these values [illegible] profit would be increased if the [illegible] cost were increased by one unit. Thus, profit would be increased by [illegible] if the availability of [illegible] man-hours were increased to 151. Similarly, profit would be increased by $[illegible] if the number of finishers were increased to 151. Note, further, that [illegible] slightly [illegible] [illegible] solution.

20-4 COMPUTERS AND OTHER TOOLS

Computers in Construction

As discussed in Chapter [illegible], perhaps the most exciting developments in construction [illegible] of computers are the availability of electronic mail (e-mail) and the Internet (World Wide Web), which will [illegible] enormous. Electronic communication [illegible] contractors per [illegible] communicate [illegible] information [illegible] projects and [illegible] the main office. Important [illegible] are [illegible] exchanging [illegible] with [illegible] and [illegible] with [illegible]. Manufacturers use the [illegible] promoting [illegible] products and [illegible] and [illegible] as well as [illegible] and [illegible] very [illegible]. While [illegible] manufacturers' information [illegible] [illegible] and [illegible] [illegible] [illegible] and [illegible] [illegible] [illegible]

A number of the underlying problems in the processing sciences have diminished the need for computer scientists to write computer programs and numerical problems. For the most part, solutions to these problems have been obtained using computer programs written in traditional computer languages. However, a growing variety of numerical problems are now solved using special-purpose computer programming languages, or packages. Many of these are in particular engineering disciplines or in the sciences. Some of the widely used software packages include statistical processors, spreadsheets, database programs, computer graphics programs, and project management programs. The general software packages that include several of these programs are now commonplace in business and academic environments. Some of the software packages are specifically for the personal computer market, including programs for word processing, spreadsheets, and integrated programs, and programs for maintaining personal computer equipment and data. With the increasing power and declining cost of computers, more people are using them in their jobs, which always suggests a valuable shortcut.

Good documentation is needed for general-purpose software, as well as for proprietary software, including manuals, and procedure manuals. There are many utility programs for performing utilitarian functions such as data specification, source code maintenance, and other functions. Many programs are available for many computer processors. These include the most popular programs for word processing, spreadsheets, database management, graphics, and other functions.

Software productivity tools must provide the user of the tool with the knowledge needed to use the tool to generate the correct results. Software tools are specifically intended to specify the correct results of the problem to be solved, and to specify the correct data on which the problem is to be solved. For example, the entire purpose of a spreadsheet is to specify what should be multiplied together. The software tool must also be able to verify that the data is correct, and that the results are correct. Many electronic spreadsheet packages also provide some help in determining the correctness of the results. Software tools must be able to verify that the results are correct. The user must be able to determine the effect produced by any change in the specified data.

Software productivity tools must be able to generate, maintain, and manipulate a collection of data. General purpose database programs are available for a specific purpose, such as inventory control. Although such specialized programs are extremely useful in some situations, they can be used only for the purpose for which they were written. The other general purpose database programs are much more widely used. Generally, general-purpose database programs must be customized for each specific application. The advantage of general-purpose database programs is that they are simpler and usually less expensive than customized software. However, they can be used only for certain applications. Relational database systems, a variety of computer software, and files are the same thing. For example, they are a collection of logically related, identical records. Summary data can be filed to produce the product cost.

Communications programs are used for communications between computers and with Information Service Providers (ISPs). They can be used to access such information services as electronic mail, electronic bulletin boards, and the Internet. Used with a computer and modem, they allow wireless communication or communication over a secondary telephone line.

Internet Service Providers (ISPs) provide access to e-mail and Internet services. Again, a computer, modem, and the software described below are required to utilize these services.

Graphics programs greatly speed up and facilitate the preparation of graphic material. They are widely used for pictures, charts and other illustrations for reports and presentations. Computer-aided design programs (CAD) are also becoming widely used for construction design.

Project management programs are usually built around the network planning techniques described in Chapter 16. They also provide for multiproject and bookkeeping costs and resource allocation as well as time data. Some programs are interactive and capable of network editing.

Equipment management programs provide many capabilities for maintaining an equipment fleet. They can maintain equipment cost and utilization history, schedule preventive maintenance and locate needed equipment for purchasing or rental.

Advanced Techniques

In addition to the quantitative methods and techniques and computer software described above, there are several more advanced techniques available to the professional construction manager. The complexity of these advanced techniques is beyond the scope of this text, but a brief description of the use of mathematical models and linear functions is given.

Complex construction problems that are analytically intractable are easily solved by analytical methods. The application of simulation techniques to network planning methods has been described in Chapter 16. The simulation of construction operations may be accomplished by writing a computer program using a conventional programming language such as FORTRAN, language A, by utilizing a packaged simulation program. A typical flow chart of a computer simulation program is shown in Figure 20-6. Packaged simulation programs are relatively simple to use but usually limit the type of equipment which can be modeled. However, a program written using a conventional language can quickly become almost as complex as construction management itself. Because it is difficult to determine several authoritative conditions prior to running the simulation program.

In this day of rapid technological advance, we can look for additional assistance in the use of new technology in construction. As we have seen, one of the reliability of the personal computer has placed a powerful tool at the disposal of the construction professional. In addition, computers have really begun to be applied to the control systems of construction equipment and to the communication systems discussed in the following section.

Simulation Number 6

Type of Material	Loading Method	Project Conditions	Delay Options	Parking Method
Excavation work Solid	1-Single scraper 2-Tandem scrapers 3-Push pull 4-Pushloading	Length of haul [illegible] Type of haul [illegible] [illegible] Haul grade [illegible] Delay option 1	[illegible] [illegible]	1-Angle parking 2-Drive-in parking

Scrapers

Scraper Number	Load Stock	No. Trip	Rated Load (LCY)	Avg Load (LCY)	No. Loads	Load Time (min)	Haul Rate (LCY/hr)	Haul Time (min)	Coal Time (min)	Dump Time (min)	Wait Time (min)	Fixed Delay Time (min)	Total Cycle Time (min)	% Total	Prod. (LCY/hr)
1	1	5	[illegible]	53	53	[illegible]	[illegible]	[illegible]	[illegible]	[illegible]	[illegible]	[illegible]	[illegible]	[illegible]	[illegible]
2	1	2	[illegible]	[illegible]	[illegible]	[illegible]	[illegible]	[illegible]	[illegible]	[illegible]	[illegible]	[illegible]	[illegible]	[illegible]	[illegible]
3	[illegible]	[illegible]	[illegible]	[illegible]	[illegible]	[illegible]	[illegible]	[illegible]	[illegible]	[illegible]	[illegible]	[illegible]	[illegible]	[illegible]	[illegible]
4	[illegible]	[illegible]	[illegible]	[illegible]	[illegible]	[illegible]	[illegible]	[illegible]	[illegible]	[illegible]	[illegible]	[illegible]	[illegible]	[illegible]	[illegible]
5	[illegible]	[illegible]	[illegible]	[illegible]	[illegible]	[illegible]	[illegible]	[illegible]	[illegible]	[illegible]	[illegible]	[illegible]	[illegible]	[illegible]	[illegible]
6	[illegible]	[illegible]	[illegible]	[illegible]	[illegible]	[illegible]	[illegible]	[illegible]	[illegible]	[illegible]	[illegible]	[illegible]	[illegible]	[illegible]	[illegible]
7	[illegible]	[illegible]	[illegible]	[illegible]	[illegible]	[illegible]	[illegible]	[illegible]	[illegible]	[illegible]	[illegible]	[illegible]	[illegible]	[illegible]	[illegible]
8	[illegible]	[illegible]	[illegible]	[illegible]	[illegible]	[illegible]	[illegible]	[illegible]	[illegible]	[illegible]	[illegible]	[illegible]	[illegible]	[illegible]	[illegible]

Notes

[illegible]
[illegible]
[illegible]
[illegible]
[illegible]

Figure 24-6. Scraper simulation project 2 output.

20–5 ROBOTS IN CONSTRUCTION

Robots in construction are now commonly used in Japan. Japan has an aging population and a shortage of young workers. As the technology for improved robots has been developed, increasing use in construction is now taking place, including in automobile manufacturing industry. Advantages of robots over human workers are their higher speed, precise accuracy, ability to work under adverse conditions, and their being work-hard. While robots are cheaper than human workers, they are expensive in terms of skilled workers to design, maintain, program, and repair the robots.

Though the advantages of robots are clear in manufacturing and construction, there have been some obstacles in the way of their use. They require an open field environment and simple characteristics of construction projects make the use of robots unnecessary. In construction, despite these obstacles, progress is being made in the development of robots and automation equipment for construction tasks.

Recent Developments

Considerable research and development work on the use of robots in construction is being carried out in Japan. Japan has a population of 125 million and a shortage of young workers. The construction industry is a very important industry in Japan. Japan is a leader in the use of robots and automation equipment for construction tasks.

Building Construction

- Finishing a concrete floor surface
- Finishing the structural steel framework
- Positioning steel members for steel erection
- Spray painting the walls and ceiling of a building
- Stabilizing walls and other building components

Heavy Construction

- Automatic welding of steel plates
- Automatic steel erection
- Automatic tunnel boring machines
- Computer control of tunnel boring machines
- Measurement of pipeline and tunnel

The automatic welding machine for steel structures and pipelines is a very important application of robots in Japan. A pipe manufacturer commercially has an economic operation and uses an automated welding system. The pipe diameter is shown in Figure 20–6. The welding machine achieves the best results in welding consistently. Workers at the welding pipe installation. The multipurpose robot shown

Figure 20-7 Automated grade control of an excavation using a laser (Courtesy of Trimble).

Figure 20-8 Remote-controlled pipe manipulator (Courtesy of the Construction Automation and Robotics Laboratory, North Carolina State University).

in Figure 20-8 is a remotely controlled construction vehicle used for laying tile, plastic pipe, and providing inside grading.

The availability of the Global Positioning System (GPS) has provided a new tool for surveying, mapping, site layout, and for a variety of construction equipment. The GPS system consists of 24 satellites orbiting the earth at an altitude of 20,000 mi (32,000 km). By using a GPS receiver, a user can get an accurate location anywhere on the earth's surface. For more information on GPS, see Chapter 7.

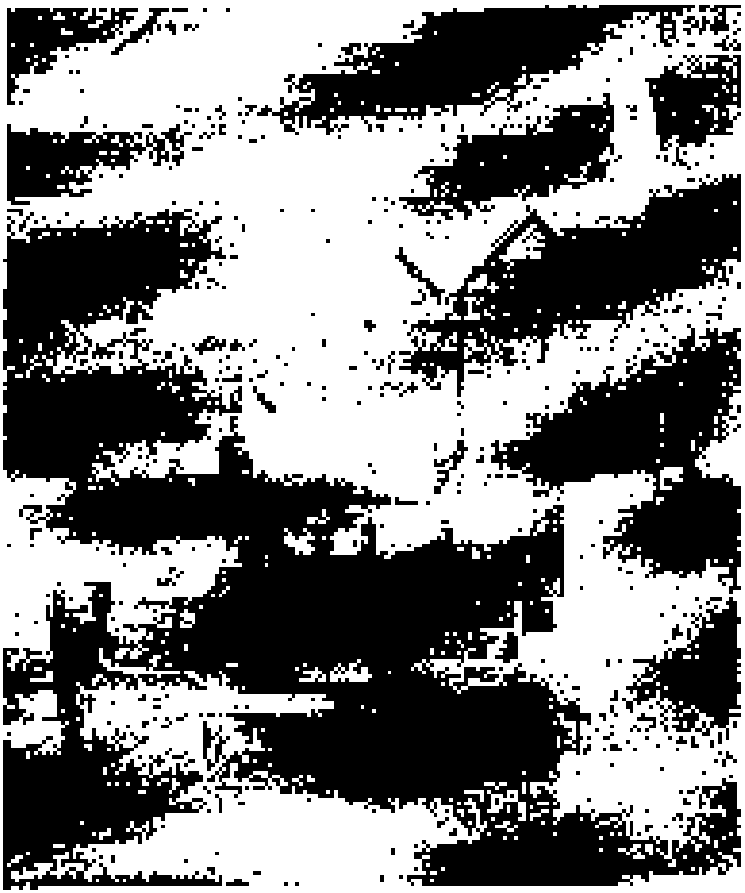

Figure 20-4 Robot for underwater construction (Courtesy of Fred Albersmeyer)

20-6 THE FUTURE

As we have noted throughout this book, changes in the construction industry are occurring very slowly. Some trend areas in construction include: [illegible] in structural concepts, [illegible] provide collaborative [illegible] on the [illegible] use and speed of communication [illegible] and [illegible] government regulation of the industry, particularly in the areas of safety and environmental protection.

Companies are paying a growing attention to equipment design and operation. Automation is taking over many operations [illegible] equipment control. Office equipment control systems are integrated with wireless communication systems. GPS (Global Positioning System) systems are now used [illegible] of the remote mine [illegible] become highly feasible. In addition, [illegible] highly [illegible]

[illegible] and operation. Such developments will increasingly demand skilled technicians [illegible] maintenance and repair the equipment involved.

In light of these developments, [illegible] constructive professional [illegible] working future.

PROBLEMS

1. What was the original [illegible] of the Business Roundtable CICE Study [illegible] Systematic Improvement?
2. Using [illegible] annual [illegible] dollars) in Fixed Construction Put [illegible] United States for [illegible] used [illegible] by the U.S. Census Bureau. Identify the [illegible] to obtain the data.
3. What is [illegible] specialist computer program?
4. Prepare a flow process chart for producing six chairs at a [illegible] of [illegible] 20 [illegible] input single [illegible] process. Notice that [illegible] equipment [illegible] chair cut at one [illegible] at the same [illegible] be made on each chair. Two [illegible] per hour. The steps in the process which should [illegible] allows. [illegible] is removed from the storage [illegible] the [illegible] placed [illegible] for primary storage [illegible] the process [illegible] for the second [illegible] angle, and the process is repeated on the second [illegible] the [illegible] is placed [illegible] storage [illegible] for [illegible]. The following [illegible] planning steps in preparing your flow process chart. The schedule [illegible] is [illegible]

   Hand transport one loaded = [illegible]

   Hand transport one unloaded = [illegible]

   Job efficiency = 50 [illegible]

   Walk one foot = [illegible]

   Average piece size = [illegible]

   Transport one to primary storage = [illegible]

   Transport one to secondary storage = [illegible]

   Remove material stack [illegible] = [illegible]

   Remove [illegible] from [illegible] = [illegible]

   Remove [illegible] from stack = [illegible]

   Stack [illegible]

5. Briefly [illegible] of [illegible] and [illegible] site.
6. What is the purpose of [illegible] and [illegible] in [illegible] construction?
7. Explain the effect of [illegible] on the labor cost per unit of [illegible] and [illegible].

8. How would the process of converting chords described in Problem 4 [illegible] make more efficient?

9. a. The costs from the process of converting the chords shown in Figure 20-2 are 12.5 times as the costs of [illegible]. What is the minimum number of processors [illegible] using [illegible] when each subproblem is unbalanced?

   b. Using a [illegible] for processing subproblems is [illegible]. Using this case, how many processors would it take to process the tables for 200 [illegible]?

10. Does linear programming [illegible] problem of Lookup 20-1.

REFERENCES

1. Abdi, [illegible] "[illegible] Problem," Applied Prog[illegible] Management, 1975 Journal of Computer Engineering and Management, vol. [illegible], no. 5, [illegible], pp. [illegible].
2. Aho, [illegible] J. Computer Algorithms. Reading, Mass.: Addison-Wesley, 1974.
3. Albert, Louis E. Computer Problem Solving. New York: McGraw-Hill, 1969.
4. Dantzig, [illegible] "[illegible] Problem," Proceedings of the Symposium on Combinatorial Mathematics, vol. [illegible], [illegible], pp. [illegible].
5. Computer [illegible] Report [illegible], Washington, [illegible], August [illegible].
6. Dijkstra, [illegible] "[illegible]," Communications of the ACM, [illegible].
7. Dijkstra, E. J. Communication Problem. New York: [illegible], 1972.
8. Karp, R. M., [illegible] "[illegible]," Journal of Computer and Engineering and Management, vol. [illegible], no. [illegible], [illegible], pp. [illegible].
9. Myers, [illegible] Computer [illegible]. Reading, Mass.: [illegible], 1974.
10. Nemhauser, G. L., [illegible] Optimization. [illegible]: Wiley, 1972.
    Ostle, B., H. W. Parker, and [illegible]. Mathematics in Modern Management. New York: McGraw-Hill, 1980.
11. Parker, Douglas C., Jr. "[illegible]," [illegible], vol. [illegible], no. [illegible], pp. [illegible].
12. Solution Overview: Effective Choices for Projects. CCE Report C-2. The Business Board, [illegible], November [illegible].
13. Stark, [illegible] J. Mayer, Jr. Quantitative Management. New York: Wiley, 1977.

APPENDIX A

Metric Conversion Factors

Multiply English Unit	By	To Obtain Metric Unit
inch	25.40	millimeters (mm)
square inch	645.2	square millimeters (mm^2)
cubic inch	16.39 × 10^{-3}	cubic centimeters (cm^3)
foot	0.3048	meter (m)
square foot	0.0929	square meters (m^2)
cubic foot	0.028 32	cubic meters (m^3)
	28.32	liters (l)
square yard	0.8361	square meters (m^2)
cubic yard	0.7646	cubic meters (m^3)
gallon	3.785	liters (l)
gallons per square yard	4.527	liters per square meter (l/m^2)
horsepower	0.746	kilowatt (kW)
mile	1.609	kilometer (km)
miles per gallon	0.4251	kilometers per liter (km/l)
miles per hour	1.609	kilometers per hour (km/h)
pound	0.454	kilogram (kg)
	4.448	Newtons (N)
pounds per square inch	0.06895	bar
	6.895	kilopascals (kPa)
pounds per foot	14.59	Newtons per meter (N/m)
	1.459	kilograms per meter (kg/m)
pounds per cubic foot	27.68	kilograms per cubic meter (kg/m^3) or Newtons per cubic meter (N/m^3)
	5.882	kilograms per square meter (kg/m^2)
pounds per cubic yard	0.01602	grams per cubic centimeter (g/cm^3)
	16.02	kilograms per cubic meter (kg/m^3)
pounds per square yard	0.5427	kilograms per square meter (kg/m^2)
	5.820	Newtons per square meter (N/m^2)
pounds per cubic yard	0.5933	kilograms per cubic meter (kg/m^3)
pounds per square foot	0.9765	grams per square centimeter (g/cm^2)
	47.76	kilopascals (kPa)

APPENDIX **B**

Construction Industry Organizations

In the preceding chapters reference has been made to a number of construction industry organizations. Following are addresses and websites of these organizations.

American Concrete Institute (ACI)
P.O. Box 9094
Farmington Hills, MI 48333-9094
www.aci-int.org

American Forest and Paper Association (AF&PA)
(replaces National Forest Products Association)
1111 19th Street NW, Suite 800
Washington, DC 20036
www.afandpa.org

American Institute of Steel Construction, Inc. (AISC)
One E. Wacker Drive, Suite 3100
Chicago, IL 60601-2001
www.aisc.org

American Institute of Timber Construction (AITC)
7012 S. Revere Parkway, Suite 141
Englewood, CO 80112
www.aitc-glulam.org

American Road & Transportation Builders Association (ARTBA)
1010 Massachusetts Avenue, N.W.
Washington, DC 20001
www.artba.org

APA – The Engineered Wood Association (APA)
P.O. Box 11700
Tacoma, WA 98411
www.apawood.org

American Society of Civil Engineers (ASCE)
1801 Alexander Bell Drive
Reston, VA 20191-4400
www.asce.org

Aspalti Institute (AI)
P.O. Box 14052
Lexington, KY 40512-4052
www.asphaltinstitute.org

Association of Pavement Contractors (APC)
1300 N. Seventeenth Street, Suite 900
Rosslyn, VA 22209
www.apc.org

Associated General Contractors of America, Inc. (AGC)
1957 Eisenhower Highway
Alexandria, VA 22314
www.agc.org

Association of Legislative Municipal Counsel (ALM)
Cooperative Council (CMAC or ALM)
11 East Wisconsin Avenue, Suite 900
Milwaukee, WI 53202
www.alm.org

Air Force Industry Association (AFIA)
1570 Corporate Ridge Drive
Reston, VA 20191-1525
www.afia.org

Business for Clean Energy (B4CE)
[illegible] Street, NW, Suite 1[illegible]
Washington, DC 20036
www.[illegible].org

Concrete Recycling Association (CRA)
9[illegible] N. Point Green Road
Schaumburg, IL 60[illegible]
www.[illegible].org

Forest Products Society (FPS)
3801 [illegible]
[illegible]
www.[illegible]

National Aggregates Association (NAA)
[illegible]
1100 Eastern Boulevard
Lancaster, [illegible]
www.[illegible]

National Association of Demolition Contractors (NADC)
527 South Adams Street
[illegible], TX 76[illegible]
www.[illegible]

National Council of the Construction of Green Buildings (NCCGB)
2[illegible]
Fairfax, VA 22[illegible]
www.[illegible]

National Utility Contractors Association (NUCA)
4301 North Fairfax Drive, Suite 300
Arlington, VA 22203-1627
www.nuca.com

Northeastern Society for Innovative Technology (NSIT)
1[illegible] N. [illegible]
Arlington, VA 22209
www.[illegible]

Portland Cement Association (PCA)
[illegible]
[illegible]
[illegible]

[illegible]
[illegible]
[illegible]
[illegible]

Steel Joist Institute (SJI)
[illegible]
[illegible]
[illegible]

Tile Roofing Institute, Inc. (TRI)
[illegible]
[illegible]
[illegible]

Wood Truss Council of America (WTCA)
[illegible]
[illegible]
[illegible]
[illegible]

APPENDIX C

Construction Internet Sources

Address	Scope
www.asphaltinstitute.com	Asphalt Pavement Alliance information
www.asphaltmagazine.com	Asphalt Contractor magazine online
www.[illegible].com	Classifieds for the construction industry
www.buildings.com	Commercial building industry site
www.concrete-asphalt.com	Concrete Construction magazine online
www.concretenetwork.com	Concrete Network [illegible]
www.[illegible].com	Construction Equipment magazine online
www.constructionweekly.com	Construction Weekly magazine online
www.[illegible].com	Construction industry marketplace
www.[illegible].com	Construction education resources
www.constructionsitesnews.com	Construction Site News magazine online
www.constructionweblinks.com	Links to over [illegible] construction resources
www.[illegible].com	Equipment, [illegible], equipment, parts and services
www.environmentalbuilding.com	Environmental building news
www.equipmentworld.com	Equipment World magazine online
www.[illegible]	Grading & Excavating Contractor magazine online
www.heavyequipmentnews.com	Heavy Equipment News magazine online
www.[illegible]	National Asphalt Pavement Association information
www.osha.gov/dte/[illegible]	OSHA [illegible] regulations, compliance and safety inspections.
www.roadandbridges.com	Roads & Bridges magazine online
www.[illegible].com	Construction Contractor Information.

Index

A

[illegible]

[illegible]

[illegible]

Aquaculture

[illegible]

[illegible]

[illegible]

Air compressors [illegible]

[illegible]

[illegible]

[illegible]

Air-conditioning [illegible]

Air filters [illegible]

[illegible]

[illegible]

[illegible]

Aquaculture [illegible]

Aquaculture [illegible]

Aquaculture [illegible]

[illegible]

[illegible]

[

[illegible]
[illegible], 423–13
  [illegible], 117–174
  [illegible]
  [illegible]
[illegible], 334
Budget [illegible]
Budgeting [illegible], 415
Business [illegible], 22
Buyout
  [illegible], 7
  [illegible], 43–46
  [illegible], 60–3
  [illegible], 74
  [illegible], 54–55
  [illegible], 85–95
  [illegible], 94–105
  [illegible], 61–64
  [illegible], 45
  [illegible], 57

[illegible]
[illegible]
[illegible], 34
[illegible], 36
[illegible], 105

C

[illegible], 155
[illegible], 55–57
[illegible], 456–57
[illegible], 54–55
[illegible], 314
[illegible]
  [illegible], 54
[illegible]
[illegible], 10
[illegible], 254–55
[illegible]
[illegible], 57–61
[illegible], 33
[illegible], 22
[illegible]
  [illegible], 57
[illegible], 110
[illegible], 105
[illegible], 206–5

[illegible]
[illegible], 175–41, See also Organizational [illegible]
  [illegible], 127
  [illegible], 179
  [illegible], 142–43
  [illegible], 128–37
  [illegible], 42
  [illegible], 130–3
  [illegible], 135
[illegible]
  [illegible], 225–222
  [illegible], 117
  [illegible], 73–75
  [illegible], 142
  [illegible], 120–13
  [illegible]
  [illegible], 4
  [illegible], 42
  [illegible], 77–87
  [illegible], 139
  [illegible], 132–33
  [illegible], 173–74
  [illegible]
  [illegible], 33
  [illegible], 132–33
[illegible], 16
[illegible], 20–11
[illegible], 13–14
  [illegible], 43
[illegible]
  [illegible], 20
  [illegible], 311
  [illegible], 315
  [illegible], 213–18
  [illegible]
  [illegible], 205
  [illegible], 211
[illegible], 149
[illegible], 141–1
[illegible], 145–61
  [illegible]
  [illegible], 33–39
[illegible], 314–1
[illegible], 87–88

[illegible], 382
[illegible]
  [illegible], 116–19
  [illegible], 21
[illegible]
  [illegible], 17
  [illegible], 8
  [illegible], 1–5
  [illegible], 19
  [illegible], 1–5
  [illegible], 15–16
  [illegible], 15
[illegible], 314–1
  [illegible], 20
  [illegible], 303–10
  [illegible]
  [illegible], 11–11
  [illegible], 308–300
[illegible], 217–11
[illegible]
  [illegible], 143
  [illegible], 118
[illegible], 42
[illegible], 49–57
[illegible]
[illegible], 57
[illegible], 200
[illegible], 403–475
[illegible]
  [illegible]
  [illegible], 27
  [illegible], 7
  [illegible], 21–11
  [illegible], 67
  [illegible], 7–77
  [illegible], 8
  [illegible], 27–31–37
  [illegible], 14–11
  [illegible], 54–44
  [illegible], 48
  [illegible], 31–37
[illegible], 17
  [illegible]
  [illegible], 43–44
  [illegible], 21–5
[illegible], 3–7–11

C

Cache
  [illegible]
  [illegible]
Cache [illegible]
[illegible]
Carrier [illegible], 199–215
Cascading [illegible] 31–34
Checkerboard 145–156
Component [illegible]
Conditional [illegible]
Coding [illegible] 240–258
Connection [illegible]
Current [illegible]

D

Data [illegible]
Deep [illegible]
Density [illegible]
    142–146
Dependability [illegible] 455–457
  [illegible]
    [illegible]
  [illegible] procedure [illegible] 494–497
  [illegible]
  [illegible]
    434–437
Diagnosis [illegible] 31–33
  [illegible]
Distance [illegible]
  [illegible] 296–299
  [illegible]
  [illegible]
  [illegible]
  [illegible]
Distributed [illegible]
  [illegible]
  [illegible]
Downstream [illegible]
  [illegible] 55
    [illegible]
    [illegible]
    [illegible]
    [illegible]
    [illegible]
    [illegible]
    [illegible]
    [illegible]
  [illegible] 31–33
    [illegible]

  [illegible]
    [illegible]
  [illegible]
  [illegible]

[illegible]
[illegible]
[illegible]
[illegible]
[illegible]

G
Gaudiano, 474–79
[illegible]
[illegible]
Gupta, 111–14
[illegible]
[illegible]
[illegible]
[illegible]

Microscopes, 47
Mitoplasts, 267
Molecular cloning
  in E. coli, 396–400
  vectors, 398
Molecules, 116
Molecular weight, 113
Monosomes, 334–339
Mutagenesis, 127–131
Mutations, 127–131
Mutations, conditional, 414–417
Mycobacteria, Gram, 155
Mycoplasma, 124
Myosin II, 320–321
Multiple surface antigens, 221–224

N

Nanobacteria, 100–102
Nanoparticle carriers, 57–58
Natural selection, 49
Neocarzinostatin, 297
Neoplastic cells, 110–114

O

Oligomycin Sensitivity-Conferring Protein (OSCP), 313–318
Oncogenes, 137
Organelles, 116
Organelle fusion, fusogenic peptides, 88
Organic acids, transport across membrane, 134–135
Organism, microbial, 124–129
Oxygen, photosynthesis, 181
Oxygenase, 172
Oxygenase inhibitors, 173–174
  [illegible], 174

P

Parallel cloning, 401
Parameter Management System, 314
Particle equipment
  biomedical, 210–215
  industrial, 215–218
Pathogenicity, 129
Peptidoglycan, 256
Peptides, 77, 81–82
Peptidases, 82
Peptidase inhibitors, 167
Peptidomimetics, 83
Peptide mimetics, 83–84
Peptide synthesis, 180–187
Peptide fusion, 88–89
Phagocytosis, 101–102
Phagocytic cells, 101
Phagocytic cell, 140
Phenotypes, 140
Phenotypic, 141
PHI field sensor, 225
Photosynthetic apparatus, 146
  antenna complex, 147
Photosynthetic bacteria, 147
Photosynthetic membrane, 148
Photosynthetic reaction center, 148
Photosynthetic unit, 148
Photosynthesis, 400–402
Photosynthesis, light, 402
Photosynthesis, 401
Photosynthesis, 401–403
Photosynthesis, light, 402
Photosynthesis, light, 402
Photosynthesis, light, 402

Q
Qualification [illegible]
Quality control [illegible]

R
Radar [illegible]
Radio [illegible]
Receiver [illegible]
Reconnaissance [illegible]
Reference [illegible]
Reflection [illegible]
Refraction [illegible]
Remote [illegible]
Remote [illegible]
Remote [illegible]
Remote [illegible]
Repair [illegible]
Reproducibility [illegible]
Rescaling [illegible]
Resolution [illegible]
Resolution [illegible]
Resolution [illegible]
Resolution [illegible]
Resolution [illegible]
Ring [illegible]
Ring [illegible]
Ripple [illegible]
Rivetting [illegible]
Rivetting [illegible]
Robots [illegible]
Rock
  [illegible]
  [illegible]
  [illegible]
  [illegible]
  [illegible]
  [illegible]
  [illegible]
  [illegible]
Rotor [illegible]
Rotor [illegible]
Rotor [illegible]
Rotor [illegible]

S
Saddle [illegible]
Safety [illegible]
  [illegible]
  [illegible]
  [illegible]
  [illegible]
Samples [illegible]
Sand [illegible]
Satellite [illegible]
Satellite [illegible]
Satellite

Spectrum [illegible]
Spill [illegible]
Spill kits, 50–52
Spotting [illegible], 75–[illegible]
Spread [illegible], 253–54
Stability of [illegible], 370–81
Storage [illegible]
Storage [illegible], 55
Structural [illegible]
Surface [illegible], 177–[illegible]
  [illegible]
  [illegible], 463–43
  [illegible]
  [illegible], 488–[illegible]
  [illegible], 485–[illegible]
  [illegible]
Stud [illegible], 165–75
Sunrise, 189
[illegible]
[illegible]
[illegible], 42–[illegible]
Suspicious [illegible], 95
[illegible], 496–[illegible]
[illegible]
[illegible], 490–[illegible]
[illegible]
[illegible]
[illegible]
[illegible]
[illegible]
[illegible]
[illegible]

T

[illegible]
[illegible]
[illegible]
[illegible]
[illegible]
[illegible]
[illegible]

For more information about Prentice Hall's complete list of Construction & Civil Technology titles visit our website at http://www.prenhall.com/construction

SEVENTH EDITION

Construction Methods and Management

S. W. NUNNALLY

This classic text incorporates major construction management topics with coverage of the methods of heavy/highway and building construction. It incorporates both U.S. customary and metric (SI) units throughout the text, presents concrete formwork design equations and procedures in both units, and covers construction equipment maintenance practices and safety considerations. Heavily illustrated, this unique text and reference combines a solid foundation in principles with practical applications.

New and updated topics in this edition include:

- Construction productivity
- Formwork design
- Fuel-resistant asphalt
- Masonry and concrete construction
- Safety
- Compaction
- Wood preservation
- Truss installation

StudentAid.ed.gov
FUNDING YOUR FUTURE

PEARSON
Prentice Hall

Instructor Resource Center
Register today at www.prenhall.com to access instructor resources digitally.

ISBN 0-13-171685-9
90000>
9 780131 716858

NUNNALLY

Construction Methods and Management

SEVENTH EDITION

PEARSON
Prentice Hall