Target Data Sheet

QM77078

Integrated MHB L-PAMiD

1. Product Overview and Benefits

The Qorvo® QM77078 is a highly integrated Mid and High Band L-PAMiD compliant to 2G(MB), 3G, 4G and 5G standards targeted for complex flagship and premium TDD and FDD smartphones and data devices.

The high efficiency L-PAMiD module consists of separate Mid and High Band PA paths, LNA paths, distribution switches, filters, and antenna switches for multi-band coverage.

The QM77078 supports Average Power Tracking (APT) for application versatility combined with higher system efficiency across a wide range of power levels.

The QM77078 is packaged in a RoHS-compliant, compact, 56-pin, 5.42 x 6.7 x 0.65 (max) mm surface-mount leadless package.

2. Functional Block Diagram

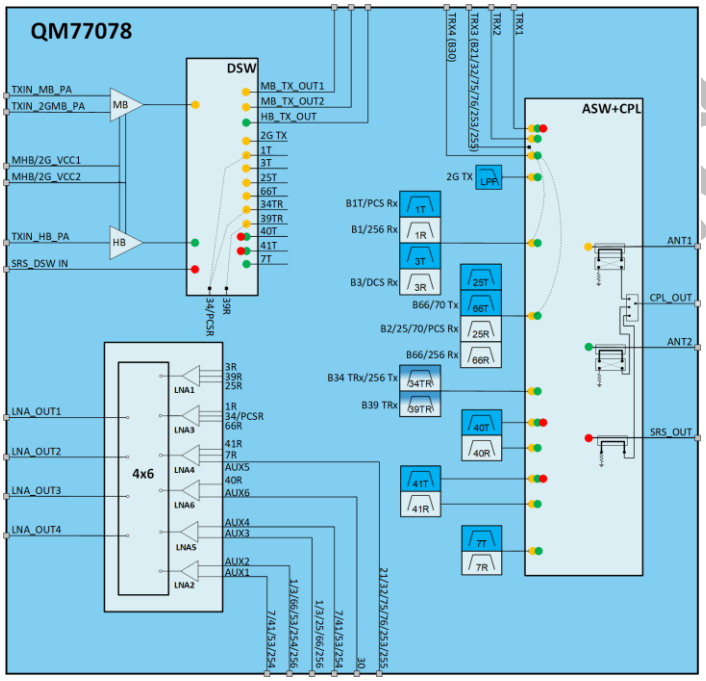

Functional Block Diagram

- Supports Power Class 2 within B41, B40, n41, n40
- Supports Multiple MIMO bands with internal DPDT
- MIPI Tx RFFE V2.1 and Rx RFFE V3.0
- Applied Microshield(TM), self-shielded technology
- 56 Pin 5.42 x 6.70 x 0.65 mm leadless SMT Package

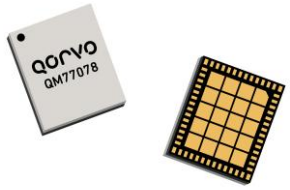

3. Key Features

- Integrated MB and HB LNAs
- Multi-Mode and Multi Band Capabilities
- Integrated Band 1, 2/25, 3, 66, 4, 7, 34, 39, 40 and 41(38) Filters for Transmit and Receive
- 2G MB/WCDMA/CDMA2000/ FDD-LTE/TDD-LTE / NR
- Additional Bands B21, B53, n253, n254, 255, n256, n74 Through External AUX Paths for MB/HB
- Global MB-MB-HB DL CA coverage
- Intra-Band Uplink and Downlink Carrier Aggregation (CA): B1, B3, B7, B39, B40, B41
- Inter-band Downlink Carrier Aggregation (DL CA) functionality: B1+B3+B7, B1+B3+B40, B1+B3+B41, B25+B66+B7, B25+B41+B66, B3+B1+B41, B3+B1+B40, B3+B1+B7, B66+B25+B41, B66+B25+B7, B7+B25+B66, B7+B1+B3, B7+B40 and B41+B39+B34
- Designed and Optimized for Use with DC-DC Converter
- Support of Average Power Tracking (APT) for High System Efficiency and Versatility
- Supports 5G NR bands n1, n25, n3, n4, n7, n40, n41, n66, n70 and n30(AUX)
- Supports SRS switching functionalities: SRS Out at ANT switch, SRS In(TRX1) to route in external SRS signal

4. Applications

- 2G/3G/4G/5G Multi-Mode Modems, Handsets, Data Cards or Wearable Devices
- High Performance Communication Systems

5. Ordering Information

Part Number	Description
QM77078SR	7” Reel with 100 pieces
QM77078TR13	13” Reel with 2500 pieces
QM77078EVB	Evaluation Board

Specifications provided are for evaluation purposes only and are subject to change without notice. This product is in pre-production and may not meet the listed specifications.
© 2025 Qorvo US, Inc. – Confidential and Proprietary Information – Subject to Non-Disclosure Agreement

6. Pin Configuration and Description

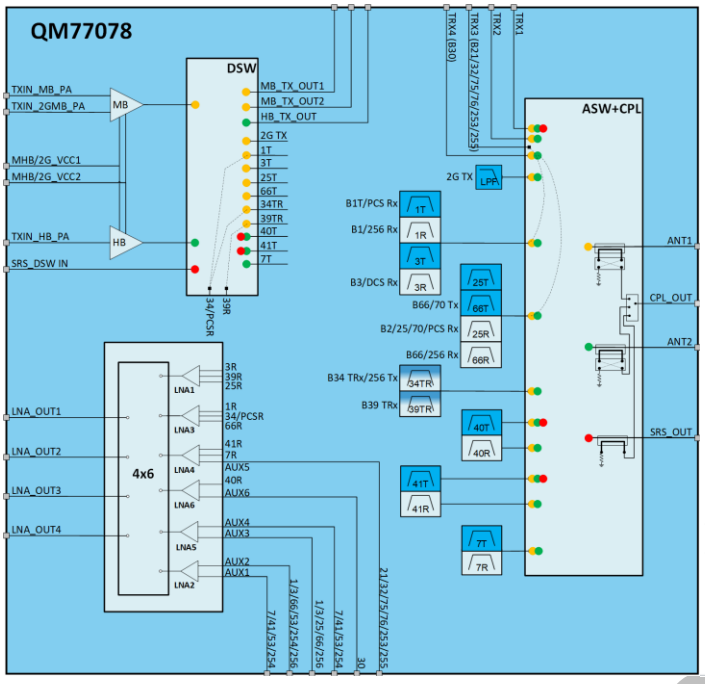

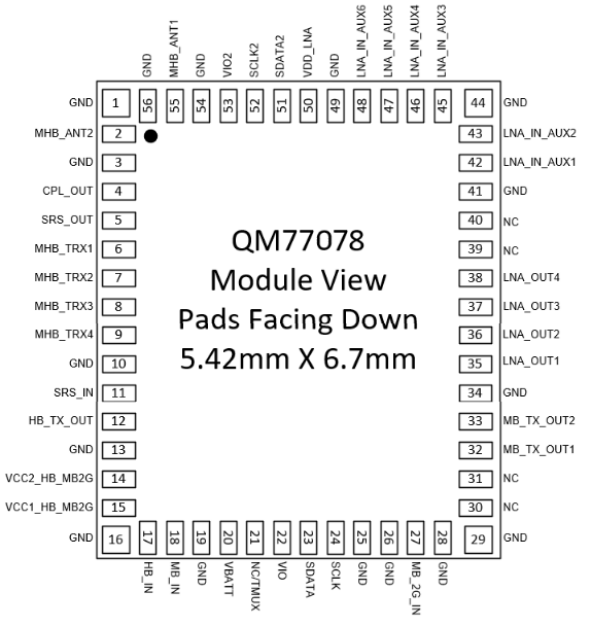

Top View

Pin Number	Label	Description
Multiple, see description for full list.	GND	1,3,10,13,16,19,25,26,28,29,30,31,34,41,44,49,54,56 These pins are connected to main module ground and will be grounded on the PCB for best RF performance
Backside Pad	GND	Ground connection. The back side of the package should be connected to the ground plane through as short of a connection as possible. PCB vias under the device are required
2	MHB_ANT2	Antenna 2 bidirectional RF port. An inductor makes this port appear as a DC short to ground
4	CPL OUT	Coupler output, selectable from ANT1 or ANT2
5	SRS_OUT	SRS Output
6	MHB_TRX1	Auxiliary RF input / output to antenna switch
7	MHB_TRX2	Auxiliary RF input / output to antenna switch
8	MHB_TRX3	Auxiliary RF input / output to antenna switch
9	MHB_TRX4	Auxiliary RF input / output to antenna switch
11	SRS_IN	SRS input
12	HB_TX_OUT	High band power amplifier auxiliary output from distribution switch
14	VCC2_HB_MB2G	DC supply for high band power amplifier output stage. Internal capacitance 158pF
15	VCC1_HB_MB2G	DC supply for high band power amplifier driver stage. Internal capacitance 10nF
17	HB_IN	RF input to the high band power amplifier, DC block is required if external DC is applied to this pin.
18	MB_IN	RF input to the mid band power amplifier, DC block is required if external DC is applied to this pin.
20	VBATT	DC supply for RF switches and amplifier bias circuitry
21	NC/TMUX	Not Connected

Confidential

Specifications provided are for evaluation purposes only and are subject to change without notice. This product is in pre-production and may not meet the listed specifications.
© 2025 Qorvo US, Inc. – Confidential and Proprietary Information – Subject to Non-Disclosure Agreement

Pin Number	Label	Description
22	VIO	DC supply voltage for the MIPI RFFE serial interface bus #1 (PA and switches).
23	SDATA	Serial interface data I/O signal for programming the MIPI RFFE bus #1 (PA and switches)
24	SCLK	Serial interface clock input signal for programming the MIPI RFFE bus #1 (PA and switches)
27	MB_2G_IN	RF input to the 2G mid band power amplifier
32	MB_TX_OUT1	Mid band power amplifier auxiliary output from distribution switch
33	MB_TX_OUT2	Mid band power amplifier auxiliary output from distribution switch
35	LNA_OUT1	Internal LNA output. Switches connect this port to any one of the internal LNA1-LNA4
36	LNA_OUT2	Internal LNA output. Switches connect this port to any one of the internal LNA1-LNA4
37	LNA_OUT3	Internal LNA output. Switches connect this port to any one of the internal LNA1-LNA4
38	LNA_OUT4	Internal LNA output. Switches connect this port to any one of the internal LNA1-LNA4
39	NC	Unused, no connect or GND on PCB
40	NC	Unused, no connect or GND on PCB
42	LNA_IN_AUX1	AUX1 LNA RX input
43	LNA_IN_AUX2	AUX2 LNA RX input
45	LNA_IN_AUX3	AUX3 LNA RX input
46	LNA_IN_AUX4	AUX4 LNA RX input
47	LNA_IN_AUX5	AUX5 LNA RX input
48	LNA_IN_AUX6	AUX6 LNA RX input
50	VDD_LNA	DC supply for LNA circuitry. Nominal voltage 1.2V
51	SDATA2	Serial interface data I/O signal for programming the MIPI RFFE bus #2 (LNA)
52	SCLK2	Serial interface clock input signal for programming the MIPI RFFE bus #2 (LNA)
53	VIO2	DC supply voltage for the MIPI RFFE serial interface bus #2 (LNA)
55	MHB_ANT1	Antenna 1 bidirectional RF port. An inductor makes this port appear as a DC short to ground

Confidential

Specifications provided are for evaluation purposes only and are subject to change without notice. This product is in pre-production and may not meet the listed specifications.
© 2025 Qorvo US, Inc. – Confidential and Proprietary Information – Subject to Non-Disclosure Agreement

7. Electrical Characteristics

Absolute Maximum Ratings

PARAMETER (1) (2) (3)		MIN.	TYP.	MAX.	UNITS
VBAT Supply Voltage	VBATT	-0.5	-	6.0	V
Supply Voltage	MHB_Vcc1/Vcc2, No RF	-0.5	-	6.0	
Supply Voltage	MHB_Vcc1/Vcc2 (2G)	-0.5	-	5.5	
	MHB_Vcc1/Vcc2 (PC3 MB)	-0.5	-	5.0	
	MHB_Vcc1/Vcc2 (PC3 HB)	-0.5	-	5.0	
	MHB_Vcc1/Vcc2 (PC2)	-0.5	-	5.5	
	MHB_Vcc1/Vcc2 (AUX)	-0.5	-	5.0	
LNA Supply Voltage	LNA_VDD	-0.5	-	1.7	
MIPI RFFE BUS	VIO, SDATA, SCLK	-0.5	-	2.4	
Input Power	MB_2G_IN	-	-	10	dBm
	MB_IN, HB_IN	-	-	15	
	LNA_AUX_IN, ANT (Rx)	-	-	25	
	TRX	-	-	34	
Storage Temperature	Tstorage	-40	-	125	°C

Notes:
1. Stresses greater than the listed absolute maximum ratings may cause permanent and functional damage to the device.
2. Exposure exceeding absolute maximum rating conditions for extended periods may affect device reliability.
3. Part may not survive all maximums applied simultaneously.

Confidential

Specifications provided are for evaluation purposes only and are subject to change without notice. This product is in pre-production and may not meet the listed specifications.
© 2025 Qorvo US, Inc. – Confidential and Proprietary Information – Subject to Non-Disclosure Agreement

Recommended Operating Conditions

PARAMETER	MIN.	TYP.	MAX.	UNITS
Supply Voltage, VBATT	+2.8	+3.8	+5.0	V
Supply Voltage, MHB_Vcc1/Vcc2 (2G)	+0.5(1)	-	+5.0	V
Supply Voltage, MHB_VCC1/VCC2 (PC3 MB)	+0.5(1)	-	+4.5	V
Supply Voltage, MHB_VCC1/VCC2 (PC3 HB)	+0.5(1)	-	+4.5	V
Supply Voltage, MHB_VCC1/VCC2 (PC2)	+0.5(1)	-	+5.0	V
Supply Voltage, MHB_VCC1/VCC2 (AUX)	+0.5(1)	-	+4.5	V
Supply Voltage, VDD_LNA(1.2V nominal)	+1.1	+1.2	+1.3	V
Supply Voltage, VDD_LNA(1.8V nominal)	+1.65	+1.8	+1.95	V
Supply Voltage, VIO(1.2V nominal)	+1.1	+1.2	+1.3	V
Supply Voltage, VIO(1.8V nominal)	+1.65	+1.8	+1.95	V
SCLK, SDATA Logic High	0.8 x VIO	-	+1.95	V
SCLK, SDATA Logic Low	0	-	0.2 x VIO	V
SCLK Read Speed	-	-	26	MHz
SCLK Write Speed	-	38.4	52	MHz
Total Leakage Current (ICC+IBAT+ILNAVDD)	-	-	TBD	µA
Operating Temperature (2)	-30	+25	+85	°C

Electrical specifications are measured at specified test conditions. Specifications are not guaranteed over all recommended operating conditions.

Notes:

1. VCC down to 0.5V may be used for backed-off power when using DC-DC converter to reduce low power current drain. Refer to Look-up Table (LUT) for recommended VCC settings for each output power level.

2. Per 3GPP, the 2G Pout for multiple timeslots (4) should be reduced up to 6 dB

8. Register Maps

Bus Information

MIPI RFFE Bus	MIPI RFFE Version	Default USID	Product ID	Manufacturer
TX (VIO, SCLK, SDATA) Power Amplifier(s), Tx Rx Filters, and Antenna Path Configuration	2.1	15 (0xF)	164 (0xA4)	966 (0x3C6) - Qorvo
RX (VIO2, SCLK2, SDATA2) LNA Gain, LNA Path Configuration	3.0	2 (0x2)	165 (0xA5)	966 (0x3C6) - Qorvo

Confidential

Specifications provided are for evaluation purposes only and are subject to change without notice. This product is in pre-production and may not meet the listed specifications.
© 2025 Qorvo US, Inc. – Confidential and Proprietary Information – Subject to Non-Disclosure Agreement

TX Reg00 (0x00) - PA_CTRL0 (PA Control)

Bit(s)	Field Name	Description	Default	B/G/M	Trig	R/W
7	Reserved_Reg00_b7	reserved	1b0	M	T0	R
6:3	PA_BAND[3:0]	PA Band Selection 0000: PA disabled 0001: B1 0010: B2_B25 0011: B3 0100: B66_B70 0101: B34_n256 0110: B39 0111: B7 1000: B40 1001: B38_B41 1010: B30_B53 (HB_TX_OUT) 1011: MB_2G 1100: n256_B1B3 (MB_TX_OUT) 1101: B21_B11_n74 (MB_TX_OUT) 1110: n253_n254_n255 (MB_TX_OUT) 1111: reserved (PA disabled) *) for HB_AUX path of HB_DSW, HB PA will turn on for PA_BAND = B7, B30, B41, and B30 **) for MB_AUX path of MB_DSW, MB PA will turn on for PA_BAND = B1, B2, B3, B66, B34_n256, B39, 2G, B21, and n255	4b0000	M	T0	R/W
2	PA_EN	PA Enable 0: PA Off 1: PA On	1b0	M	T0	R/W
1:0	PA_MODE[1:0]	PA Mode for HB 00: HBcc 01: HBvc 10: HBcc_Att 11: HBrc PA Mode for MB/2G 00: MBrc_2xRbias_Bypass_or_2GwPreDriver 01: MB2Grc_Bypass 10: MBrc_2xRbias_Att 11: MBrc_2xRbias_Bypass *) HBrc is enabled only if eFuse bit RBIAS_EN is 1	2b00	M	T0	R/W

Confidential

Specifications provided are for evaluation purposes only and are subject to change without notice. This product is in pre-production and may not meet the listed specifications.
© 2025 Qorvo US, Inc. – Confidential and Proprietary Information – Subject to Non-Disclosure Agreement

TX Reg01 (0x01) - PA_CTRL1 (PA Driver Bias)

Bit(s)	Field Name	Description	Default	B/G/M	Trig	R/W
7:6	PA_DRIVER_VBIAS1[1:0]	MB PA Driver Stage Voltage Bias 2G/MB Driver Stage Bias Voltage DAC (2.8V to 3.1V in 0.1 steps) *) only relevant for MB/2G	2b00	M	T0	R/W
5:0	PA_DRIVER_BIAS1[5:0]	PA Driver Bias driver stage HB PA driver stage 2G/MB PA *) For VC HB PA_MODE (01), only 4-bit LSB from this bitfield is used to set VDAC1 voltage, otherwise it sets HB IDAC1. For MB/2G, this bitfield is used to set 1/R RDAC1	6b000000	M	T0	R/W

TX Reg02 (0x02) - PA_CTRL2 (PA Final Bias)

Bit(s)	Field Name	Description	Default	B/G/M	Trig	R/W
7:6	PA_FINAL_VBIAS2[1:0]	MB PA Final Stage Voltage Bias 2G/MB Output Stage Bias Voltage DAC (2.8V to 3.1V in 0.1 steps) *) only relevant for MB/2G	2b00	M	T0	R/W
5:0	PA_FINAL_BIAS2[5:0]	PA Final Bias final/power stage HB PA final/power stage 2G/MB PA *) For HB this bitfield sets IDAC2. For MB/2G, it is sets 1/R RDAC2	6b000000	M	T0	R/W

Confidential

Specifications provided are for evaluation purposes only and are subject to change without notice. This product is in pre-production and may not meet the listed specifications.
© 2025 Qorvo US, Inc. – Confidential and Proprietary Information – Subject to Non-Disclosure Agreement

TX Reg03 (0x03) - SRS_IN_CTRL (TRX and SRS)

Bit(s)	Field Name	Description	Default	B/G/M	Trig	R/W
7	ANT_TRX1_CTRL	This bit controls the MB + HBL + HBH CA case during SRS with TRX1 input, i.e., when Reg06[3:0] is non-zero 0: all other bands are diconnected when TRX1_SRS_IN is active on ANT 1: HBL and MB can still be connected to the same ANT where TRX1_SRS_IN is active *) In non-SRS state, MB + HBL + HBH CA is allowed irrespective of the state of this bit	1b0	M	T1	R/W
5:4	SRSOUT_HBRX[1:0]	B40/B41Rx connection to SRS_OUT 00: Off 01: B40Rx connected to SRS_OUT 10: B41Rx connected to SRS_OUT 11: reserved *) this selection has higher priority compared to ANT1 and ANT2.	2b00	M	T1	R/W
3	SRS_OFF_STATE	SRS_OUT default off-state 0: TERM 1: ISOLATION *) This setting is used at SRS_OUT if SRS_SWITCH = 00, 01, 10	1b0	M	T1	R/W
2:0	SRS_IN[2:0]	Settings for SRS_IN port at band-select distibrution switch 000: off 001: SRS_IN -> B41TX 010: SRS_IN -> PA_AUX (B30_TX_OUT) 011: HB_PA-> B41TX 100: HB_PA -> PA_AUX (B30_TX_OUT) 101: SRS_IN -> B40TX 110: HB_PA -> B40TX 111: Reserved *) this bitfield has priority over HB_DSW Reg07[7:5]: In case of conflict between settings of this bitfield and Reg07[7:5] , setting of this bitfield takes priority. **) internal HB PA turns off as soon as any of the DSW SRS_IN paths is active - expectation is that amplified power is supplied through SRS_IN	3b000	M	T1	R/W

Confidential

Specifications provided are for evaluation purposes only and are subject to change without notice. This product is in pre-production and may not meet the listed specifications.
© 2025 Qorvo US, Inc. – Confidential and Proprietary Information – Subject to Non-Disclosure Agreement

TX Reg04 (0x04) - ASW_CTRL0 (Antenna1 Switch Control)

Bit(s)	Field Name	Description	Default	B/G/M	Trig	R/W
7:6	ANT1_HBH[1:0]	Antenna Switch Control for ANT1 HB High 00: OFF 01: B7 10: B41 11: TRX1_SRS_IN	2b00	M	T1	R/W
5:4	ANT1_HBL[1:0]	Antenna Switch Control for ANT1 HB Low 00: OFF 01: TRX4_B30 10: B40 11: TRX1_SRS_IN	2b00	M	T1	R/W
3:1	ANT1_MB[2:0]	Antenna Switch Control for ANT1 MB 000: OFF 001: B1_B3_n256Rx 010: B25_B66_n70 011: B34_B39_n256Tx 100: 2G 101: TRX2_ Ext_n253n254n255n256B53B30 110: B1_B3 plus TRX3_B21B32B11_n74n75n76Rx 111: B25_B66 plus TRX2_B30 *) ANT1_MB, ANT1_HBL and ANT1_HBH can be selected at the same time to satisfy desired CA combinations.	3b000	M	T1	R/W
0	ANT1_OFF_STATE	Antenna Switch OFF state when MB, HB Low, and HB High are all OFF 0: TERM 1: ISOLATION	1b0	M	T1	R/W

Confidential

Specifications provided are for evaluation purposes only and are subject to change without notice. This product is in pre-production and may not meet the listed specifications.
© 2025 Qorvo US, Inc. – Confidential and Proprietary Information – Subject to Non-Disclosure Agreement

TX Reg05 (0x05) - ASW_CTRL1 (Antenna2 Switch Control)

Bit(s)	Field Name	Description	Default	B/G/M	Trig	R/W
7:6	ANT2_HBH[1:0]	Antenna Switch Control for ANT2 HB High 00: OFF 01: B7 10: B41 11: TRX1_SRS_IN *) in case of conflict ANT1_HBH setting takes priority	2b00	M	T1	R/W
5:4	ANT2_HBL[1:0]	Antenna Switch Control for ANT2 HB Low 00: OFF 01: TRX4_B30 10: B40 11: TRX1_SRS_IN *) in case of conflict ANT1_HBL setting takes priority	2b00	M	T1	R/W
3:1	ANT2_MB[2:0]	Antenna Switch Control for ANT2 MB 000: OFF 001: B1_B3_n256Rx 010: B25_B66_n70 011: B34_B39_n256Tx 100: 2G 101: TRX2_ Ext_n253n254n255n256B53B30 110: B1_B3 plus TRX3_B21B32B11_n74n75n76Rx 111: B25_B66 plus TRX2_B30 *) in case of conflict ANT1_MB setting takes priority *) ANT2_MB, ANT2_HBL and ANT2_HBH can be selected at the same time to satisfy desired CA combinations.	3b000	M	T1	R/W
0	ANT2_OFF_STATE	Antenna Switch OFF state when MB, HB Low, and HB High are all OFF 0: TERM 1: ISOLATION	1b0	M	T1	R/W

Confidential

Specifications provided are for evaluation purposes only and are subject to change without notice. This product is in pre-production and may not meet the listed specifications.
© 2025 Qorvo US, Inc. – Confidential and Proprietary Information – Subject to Non-Disclosure Agreement

TX Reg06 (0x06) - SRS_CNTRL0 (ANT and SRS Swap)

Bit(s)	Field Name	Description	Default	B/G/M	Trig	R/W
7	ANT_CPL_SWAP	Antenna Swap control 0: Normal mode (ANT1 from Reg04[7:0], ANT2 from Reg05[7:0]) 1: swapped mode (ANT2 from Reg04[7:0], ANT1 from Reg05[7:0]) *) antenna swapping is applied before SRS Reg06 manipulation	1b0	M	EXT3	R/W
6	CPL_SWAP_CTRL	Coupler swap control 0: Coupler settings swap with ANT_CPL_SWAP Reg_06[7] 1: Coupler settings do not swap with ANT_CPL_SWAP Reg_06[7]	1b0	M	EXT3	R/W
5:4	SRS_CPL_CTRL[1:0]	Coupler control for SRS 00: Keep Reg09 setting. 01: Automatically turn coupler off as defined in Reg09[5:4] for ANT1 and ANT2, and SRS_OUT 10: Automatically switch CPL_OUT to SRS signal path as defined in Reg06[1:0]. Put it in HB FWD mode if SRS_SOURCE is routed to ANT1 or ANT2 (override Reg09 setting); connect SRS coupler (implemented only as HB FWD) to CPL_OUT if SRS_SOURCE is routed to SRS_OUT. 11: reserved	2b00	M	EXT3	R/W
3:2	SRS_SOURCE[1:0]	SRS Source connections 00: B41 TX filter 01: TRX1_SRS_IN for B41SRS 10: B40 TX filter 11: TRX1_SRS_IN for B40SRS *) selection of state 01 or 11 for TRX1 helps in identifying which bands/connections (HBL or HBH) CA with TRX1 SRS when ANT_TRX_CTRL = 1. Outcome of states 01 and 11 is the same if ANT TRX_CTRL = 0.	2b00	M	EXT3	R/W

Confidential

Specifications provided are for evaluation purposes only and are subject to change without notice. This product is in pre-production and may not meet the listed specifications.
© 2025 Qorvo US, Inc. – Confidential and Proprietary Information – Subject to Non-Disclosure Agreement

Bit(s)	Field Name	Description	Default	B/G/M	Trig	R/W
1:0	SRS_SWITCH[1:0]	SRS Switch Settings If SRS_SOURCE = B41 TX filter: 00: Preserve ANT1 and ANT2 settings 01: Preserve ANT1 MB/HBL and ANT2 MB/HBL settings (disconnect HBH) and route SRS_SOURCE to ANT1 (together with MB/HBLas set in respective registers) 10: Preserve ANT1 MB/HBL (disconnect HBH in cas) and ANT2 MB/HBL settings and route SRS_SOURCE to ANT2 (together with MB/HBL as set in respective registers) 11: Preserve ANT1 MB/HBL (disconnect HBH) and ANT2 MB/HBL settings (disconnect HBH) and route SRS_SOURCE to SRS_OUT (without MB/HBL) SRS Switch Settings If SRS_SOURCE =TRX1_SRS_IN_B41 and ANT_TRX1_CTRL =1: 00: Preserve ANT1 and ANT2 settings 01: Preserve ANT1 MB/HBL and ANT2 MB/HBL settings (disconnect TRX1) and route SRS_SOURCE to ANT1 (together with MB/HBLas set in respective registers) 10: Preserve ANT1 MB/HBL (disconnect TRX1) and ANT2 MB/HBL settings and route SRS_SOURCE to ANT2 (together with MB/HBL as set in respective registers) 11: Preserve ANT1 MB/HBL (disconnect TRX1) and ANT2 MB/HBL settings (disconnect TRX1) and route SRS_SOURCE to SRS_OUT (without MB/HBL) If SRS_SOURCE = TRX1_SRS_IN_B41 and ANT_TRX1_CTRL = 0 (Default): 00: Preserve ANT1 and ANT2 settings 01: Preserve ANT2 MB/HBL setting (disconnect HBH) and route TRX1 to ANT1 (without MB/HBL) 10: Preserve ANT1 MB/HBL setting (disconnect HBH) and route TRX1 to ANT2 (without MB/HBL) 11: Preserve ANT1 MB/HBL (disconnect HBH) and ANT2 MB/HBL settings (disconnect HBH) and route TRX1 to SRS_OUT (without MB/HBL) If SRS_SOURCE = B40 TRX filter OR If SRS_SOURCE = B40 TX filter: 00: Preserve ANT1 and ANT2 settings 01: Preserve ANT1 MB/HBH and ANT2 MB/HBH settings (disconnect HBL) and route B40 to ANT1 (together with MB/HBH as set in respective registers) 10: Preserve ANT1 MB/HBH (disconnect HBL) and ANT2 MB/HBH settings and route B40 to ANT2 (together with MB/HBL as set in respective registers)) 11: Preserve ANT1 MB/HBH (disconnect HBL) and ANT2 MB/HBH settings (disconnect HBL) and route B40 to SRS_OUT (without MB/HBH) If SRS_SOURCE = TRX1_SRS_IN_B40 and ANT_TRX1_CTRL =1: 00: Preserve ANT1 and ANT2 settings 01: Preserve ANT1 MB/HBH and ANT2 MB/HBH settings (disconnect TRX1) and route TRX1 to ANT1 (together with MB/HBH as set in respective registers) 10: Preserve ANT1 MB/HBH (disconnect TRX1) and ANT2 MB/HBH settings and route TRX1 to ANT2 (together with MB/HBL as set in respective registers)) 11: Preserve ANT1 MB/HBH (disconnect TRX1) and ANT2 MB/HBH settings (disconnect HBL) and route B40 to SRS_OUT (without MB/HBH) If SRS_SOURCE = TRX1_SRS_IN_B40 and ANT_TRX1_CTRL = 0 (Default): 00: Preserve ANT1 and ANT2 settings 01: Preserve AANT2 MB/HBH setting (disconnect TRX1) and route TRX1 to ANT1 (without MB/HBH) 10: Preserve ANT1 MB/HBH setting (disconnect TRX1) and route TRX1 to ANT2 (without MB/HBH) 11: Preserve ANT1 MB/HBH (disconnect TRX1) and ANT2 MB/HBH settings (disconnect HBL) and route TRX1 to SRS_OUT (without MB/HBH)	2b00	M	EXT3	R/W

Confidential

Specifications provided are for evaluation purposes only and are subject to change without notice. This product is in pre-production and may not meet the listed specifications.
© 2025 Qorvo US, Inc. – Confidential and Proprietary Information – Subject to Non-Disclosure Agreement

TX Reg07 (0x07) - XSW_CTRL0 (Distribution Switch Control)

Bit(s)	Field Name	Description	Default	B/G/M	Trig	R/W
7:5	HB_DSW[2:0]	Distribution Switch Control for HB 000: off 001: B7 TX 010: B40 TX 011: B41 TX 100: HB_TX_OUT 101 - 111: Reserved *) for HBPA_AUX path, HB PA will turn on for PA_BAND = B7, B30, B41, and B30	3b000	M	T1	R/W
4	spare	spare	1b0	M	T1	R/W
3:0	MB_DSW[3:0]	Distribution Switch Control for MB 0000: off 0001: B1 TX 0010: B25 TX 0011: B3 TX 0100: B39 TX 0101: B39 RX 0110: MB_TX_OUT1 0111: MB_TX_OUT2 1000: B34_n256 TX 1001: B34 Rx 1010: B34 RX + B39 RX 1011: B66 TX 1100: 2G 1101: B1Tx to B34Rx for 2G PCS 1110: reserved 1111: reserved *) for MB_TX_OUT path, MB PA will turn on for PA_BAND = B1, B2, B3, B66, B34_n256, B39, 2G, and n255, n74/n75, B11/B21	4b0000	M	T1	R/W

Confidential

TX Reg08 (0x08) - XSW_SRSLOAD_CTRL (DSW and SRS Load Control)

Bit(s)	Field Name	Description	Default	B/G/M	Trig	R/W
7	TUNING_2G_DSW	PAC for 2G 0: off 1: on	1b0	M	T1	R/W

TX Reg09 (0x09) - CPL_CTRL0 (Coupler Control)

Bit(s)	Field Name	Description	Default	B/G/M	Trig	R/W
6	CPL_SEL	Coupler Selection 0: ANT1 1: ANT2	1b0	M	T2	R/W

Specifications provided are for evaluation purposes only and are subject to change without notice. This product is in pre-production and may not meet the listed specifications.
© 2025 Qorvo US, Inc. – Confidential and Proprietary Information – Subject to Non-Disclosure Agreement

Bit(s)	Field Name	Description	Default	B/G/M	Trig	R/W
5:4	CPL_BAND[1:0]	Coupler Band Selection 00: automatic based on PA Band Selection in Reg00, HB if PA disabled 01: LMB 10: MB 11: HB	2b00	M	T2	R/W
3	CPL_DIR	Coupler Direction 0: FWD 1: REV	1b0	M	T2	R/W
2:1	CPL_OFF_STATE[1:0]	This bitfield defines Coupler off State of the selected output port for Reg09[0] = 0 (coupler disabled), This bitfield defines Coupler off state of the non-selected output ports for Reg09[0] = 1 (coupler enable), 00: OFF (true OFF) 01: reserved 10: TERM (coupler terminated with internal termination networks on both sides) 11: FWD/REV TERM (coupler programmed according to Reg09[6:3] but coupler signal routed to internal termination resistor instead of external CPL pin *) terminations of the selected band Reg09[5:4] is automatically activated for the selected output port Reg09[6] when Reg09[0] = 1 (coupler enable)	2b00	M	T2	R/W
0	CPL_EN	Coupler Enable 0: OFF as defined in Reg09[2:1] 1: ON as defined in Reg09[6:3]	1b0	M	T2	R/W

TX Reg28 (0x1C) - PM_TRIG

Bit(s)	Field Name	Description	Default	B/G/M	Trig	R/W
7	PWR_MODE	0: Normal operation (ACTIVE) 1: Secondary mode (LOW POWER)	1b1	B/G	No	R/W
6	PWR_STATE	0: Normal operation 1: initialization state this bit always reads 0. Writing a 1 to this bit forces a reset.	1b0	B/G	No	R/W
5:3	TRIGGERMASK[2:0]	Setting these bits to '1' will cause the corresponding triggers to be masked (disabled), and RFFE writes to corresponding registers will change configuration immediately (No trigger command necessary). TriggerMask[2] = TriggerMask_2, TriggerMask[1] = TriggerMask_1, & TriggerMask[0] = TriggerMask_0 Qorvo does Not allow for changing the trigger mask and sending triggers within the same RFFE write.	3b000	No	No	R/W

Confidential

Specifications provided are for evaluation purposes only and are subject to change without notice. This product is in pre-production and may not meet the listed specifications.
© 2025 Qorvo US, Inc. – Confidential and Proprietary Information – Subject to Non-Disclosure Agreement

Bit(s)	Field Name	Description	Default	B/G/M	Trig	R/W
2:0	TRIGGER[2:0]	Setting these bits to '1' will cause the registers associated with that trigger to be loaded with the contents of its corresponding shadow register. Trigger[2] = Trigger_2, Trigger[1] = Trigger_1, and Trigger[0] = Trigger_0 Qorvo does Not allow for changing the trigger mask and sending triggers within the same RFFE write.	3b000	B/G	No	R/W

TX Reg29 (0x1D) - PRODUCT_ID

Bit(s)	Field Name	Description	Default	B/G/M	Trig	R/W
7:0	PRODUCT_ID[7:0]	This is a read only register. However, during the programming of the USID a write command sequence is performed on this register, even though the write does Not change its value. Product ID is 0xA4	8b1010-0100	No	No	RM

TX Reg30 (0x1E) - MANUFACTURER_ID

Bit(s)	Field Name	Description	Default	B/G/M	Trig	R/W
7:0	MANUFACTURER_ID_LSB [7:0]	This is a read only register. However, during the programming of the USID, a write command sequence is performed on this register, even though the write does Not change its value. This is the lower 8 least significant bits of the RFFE's MANUFACTURER_ID	8b1100-0110	No	No	RM

TX Reg31 (0x1F) - USID

Bit(s)	Field Name	Description	Default	B/G/M	Trig	R/W
7:4	MANUFACTURER_ID_MSB [3:0]	These bits are read only. However, during the programming of the USID, a write command sequence is performed on this register even though the write does Not change its value. This is the 4 most significant bits of the RFFE's MANUFACTURER_ID (i.e. MANUFACTURER_ID[11:8] = MANUFACTURER_ID_MSB[3:0]	4b0011	No	No	RM
3:0	USID[3:0]	Programmable USID. Performing a write to this register using the described programming sequences will program the USID in devices supporting this feature. These bits store the USID of the device (customer specified).	4b1111	No	No	RM

TX Reg32 (0x20) - EXT_PRODUCT_ID

Bit(s)	Field Name	Description	Default	B/G/M	Trig	R/W
7:0	EXT_PRODUCT_ID[7:0]	This is a read only register. However, during the programming of the USID a write command sequence is performed on this register, even though the write does Not change its value.	8b0000-0000	No	No	RM

Confidential

Specifications provided are for evaluation purposes only and are subject to change without notice. This product is in pre-production and may not meet the listed specifications.
© 2025 Qorvo US, Inc. – Confidential and Proprietary Information – Subject to Non-Disclosure Agreement

TX Reg33 (0x21) - REVISION_ID

Bit(s)	Field Name	Description	Default	B/G/M	Trig	R/W
7:0	REVISION_ID[7:0]	This is an RFFE2 register to contain information about the revision of this module. The intent here is to use this as a type of scratch register -- to contain various information or serialization.	8b0000-0000	No	No	RM

TX Reg34 (0x22) - GROUP_ID2

Bit(s)	Field Name	Description	Default	B/G/M	Trig	R/W
7:4	GSID0_2[3:0]	Group slave ID 0 There is only 1 register for GSID0 & GSID1, but this register can be accessed from either Reg27 or Reg34. This means that write to Reg34 will reflect in Reg27 also, and vice versa	4b0000	No	No	R/W
3:0	GSID1_2[3:0]	Group slave ID 1 There is only 1 register for GSID0 & GSID1, but this register can be accessed from either Reg27 or Reg34. This means that write to Reg34 will reflect in Reg27 also, and vice versa	4b0000	No	No	R/W

TX Reg35 (0x23) - UDR_RST

Bit(s)	Field Name	Description	Default	B/G/M	Trig	R/W
7	SW_RESET	0: Normal operation 1: Software reset (reset of all configurable registers to default values, except for USID) There is only 1 register for RFFE_STATUS, but this register can be accessed from either Reg26 or Reg35. This means that write to Reg35 will reflect in Reg27 also, and vice versa	1b0	B/G	No	R/W
6	reserved_reg35_b6	Reserved	1b0	No	No	R
5	reserved_reg35_b5	Reserved	1b0	No	No	R
4	reserved_reg35_b4	Reserved	1b0	No	No	R
3	reserved_reg35_b3	Reserved	1b0	No	No	R
2	reserved_reg35_b2	Reserved	1b0	No	No	R
1	reserved_reg35_b1	Reserved	1b0	No	No	R
0	reserved_reg35_b0	Reserved	1b0	No	No	R

TX Reg36 (0x24) - ERR_SUM

Bit(s)	Field Name	Description	Default	B/G/M	Trig	R/W
7	reserved_reg36_b7	Reserved	1b0	No	No	R
6	CMD_FRAME_P_ERR_2	Command sequence received with parity error – discard command.	1b0	No	No	R/W
5	CMD_LEN_ERR_2	Command length error	1b0	No	No	R/W
4	ADDR_FRAME_P_ERR_2	Address frame parity error	1b0	No	No	R/W
3	DATA_FRAME_P_ERR_2	Data frame with parity error	1b0	No	No	R/W
2	READ_UNUSED_REG_2	Read command to an invalid address	1b0	No	No	R/W
1	WRITE_UNUSED_REG_2	Write command to an invalid address	1b0	No	No	R/W
0	BID_GID_ERR_2	Read command with a Broadcast_ID or GROUP_ID	1b0	No	No	R/W

Confidential

Specifications provided are for evaluation purposes only and are subject to change without notice. This product is in pre-production and may not meet the listed specifications.
© 2025 Qorvo US, Inc. – Confidential and Proprietary Information – Subject to Non-Disclosure Agreement

TX Reg43 (0x2B) - BUS_LOAD

Bit(s)	Field Name	Description	Default	B/G/M	Trig	R/W
7:4	reserved_reg43_b7_b4	reserved	4b0000	B/G	No	R
3:0	BUS_LOAD[3:0]	SDATA Driver strength in Readback Mode 0x0: 10pf 0x1: 20pf 0x2: 30pf 0x3: 40pf 0x4: 50pf 0x5: 60pf 0x6: 80pf 0x7: 100pf 0x8: 120pf 0x9: 140pf 0xA: 160pf 0xB: 180pf 0xC: 200pf 0xD: 250pf 0xE-0xF: reserved	4b0100	B/G	No	R/W

TX Reg44 (0x2C) - TEST_PATTERN

Bit(s)	Field Name	Description	Default	B/G/M	Trig	R/W
7:0	TEST_PATTERN[7:0]	A read of this register returns the test pattern	8b11010010	No	No	R

TX Reg45 (0x2D) - EXT_TRIGGER_MASK

Bit(s)	Field Name	Description	Default	B/G/M	Trig	R/W
7:0	EXT_TRIGGER_MASK[7:0]	Setting these bits to '1' will cause the corresponding triggers to be masked (disabled), and RFFE writes to corresponding registers will change configuration immediately (no trigger command necessary). Ext_Trigger_Mask[7] = TriggerMask_10 ... Ext_Trigger_Mask[0] = TriggerMask_3 if the part is in LPM and a write to this register changes the masks, the change to the masks takes effect.	8b00000000	No	No	R/W

TX Reg46 (0x2E) - EXT_TRIGGER

Bit(s)	Field Name	Description	Default	B/G/M	Trig	R/W
7:0	EXT_TRIGGER[7:0]	Setting these bits to '1' will cause the registers associated with that trigger to be loaded with the contents of its corresponding shadow register. Ext_Trigger[7] = Trigger_10 ... Ext_Trigger[0] = Trigger_3 if the part is in LPM and a write to this register changes the triggers, the change to the triggers is ignored.	8b00000000	B/G	No	R/W

Confidential

Specifications provided are for evaluation purposes only and are subject to change without notice. This product is in pre-production and may not meet the listed specifications.
© 2025 Qorvo US, Inc. – Confidential and Proprietary Information – Subject to Non-Disclosure Agreement

RX Reg00 (0x00) - N41_SPLIT_CTRL

Bit(s)	Field Name	Description	Default	B/G/M	Trig	R/W
7:4	reserved_reg00_b7_b4	reserved	4b0000	M	T0	R
3:1	B41_SPLITTER_OUT[2:0]	Selection of output ports for LNA4 B41 splitter 000: OUT1+OUT2 001: OUT1+OUT3 010: OUT1+OUT4 011: OUT2+OUT3 100: OUT2+OUT4 101: OUT3+OUT4 110-111: reserved Note: If Reg_00[0] = 1, LNA4 splitter output selection has priority over OUT1-OUT6 selection (A and B) of LNA4. Gain value on both the selected ports is 3dB below the target gain setting.	3b000	M	T0	R/W
0	LNA4_B41_SPLIT	0: Splitter off 1: Splitter on Note: In case of conflict, LNA4 splitter setting has priority over OUT1-OUT6 selection (A and B) of LNA4.	1b0	M	T0	R/W

Confidential

Specifications provided are for evaluation purposes only and are subject to change without notice. This product is in pre-production and may not meet the listed specifications.
© 2025 Qorvo US, Inc. – Confidential and Proprietary Information – Subject to Non-Disclosure Agreement

RX Reg01 (0x01) - LNA_OUT1

Bit(s)	Field Name	Description	Default	B/G/M	Trig	R/W
7:5	OUT1_LNA_SEL_A[2:0]	LNA selection for LNA_OUT1 000: ISOLATION 001: LNA1 010: LNA2 011: LNA3 100: LNA4 101: LNA5 110: LNA6 111: reserved Note: In case of conflict, prirority is defined as N41_SPLITTER > OUT1_LNA_SEL_B > OUT1_LNA_SEL_A. LNA selection in this bitfield is valid ONLY IF OUT1_LNA_SEL_B = 0.	3b000	M	T0	R/W
4:3	OUT1_INPUT_SEL[1:0]	for LNA1 00: ISOLATION 01: 3R 10: 39R 11: 25R for LNA2 00: ISOLATION 01: reserved 10: AUX2 11: AUX1 for LNA3 00: ISOLATION 01: 1R 10: 34/PCSR 11: 66R for LNA4 00: ISOLATION 01: AUX5 10: 41R 11: 7R for LNA5 00: ISOLATION 01: AUX3 10: reserved 11: AUX4 for LNA6 00: ISOLATION 01: AUX6 10: 40R 11: reserved	2b00	M	T0	R/W
2:0	OUT1_TUNE_SEL[2:0]	LNA frequency tuning for AUX ports. This bitfield has no influence on internal bands. Tuning for internal bands is automatically chosen through OUTx_INPUT_SEL selection. 000: B3 (AUX2, AUX3) 001: B41/B7 (AUX1, AUX4), B53/n254 (AUX1, AUX2, AUX4) 010: reserved 011: B25 (AUX3) 100: reserved 101: B1/B66/n256 (AUX2, AUX3) 110: B21/B32/n75/n76/n253/n255 (AUX4*, AUX5) 111: B30 (AUX6) * AUX4 does not have optimum performance for these bands	3b000	M	T0	R/W

Confidential

Specifications provided are for evaluation purposes only and are subject to change without notice. This product is in pre-production and may not meet the listed specifications.
© 2025 Qorvo US, Inc. – Confidential and Proprietary Information – Subject to Non-Disclosure Agreement

RX Reg02 (0x02) - LNA_OUT2

Bit(s)	Field Name	Description	Default	B/G/M	Trig	R/W
7:5	OUT2_LNA_SEL_A[2:0]	LNA selection for LNA_OUT2 000: ISOLATION 001: LNA1 010: LNA2 011: LNA3 100: LNA4 101: LNA5 110: LNA6 111: reserved Note: In case of conflict, prirority is defined as N41_SPLITTER > OUT2_LNA_SEL_B > OUT2_LNA_SEL_A. LNA selection in this bitfield is valid ONLY IF OUT2_LNA_SEL_B = 0.	3b000	M	T0	R/W
4:3	OUT2_INPUT_SEL[1:0]	for LNA1 00: ISOLATION 01: 3R 10: 39R 11: 25R for LNA2 00: ISOLATION 01: reserved 10: AUX2 11: AUX1 for LNA3 00: ISOLATION 01: 1R 10: 34/PCSR 11: 66R for LNA4 00: ISOLATION 01: AUX5 10: 41R 11: 7R for LNA5 00: ISOLATION 01: AUX3 10: reserved 11: AUX4 for LNA6 00: ISOLATION 01: AUX6 10: 40R 11: reserved	2b00	M	T0	R/W
2:0	OUT2_TUNE_SEL[2:0]	LNA frequency tuning for AUX ports. This bitfield has no influence on internal bands. Tuning for internal bands is automatically chosen through OUTx_INPUT_SEL selection. 000: B3 (AUX2, AUX3) 001: B41/B7 (AUX1, AUX4), B53/n254 (AUX1, AUX2, AUX4) 010: reserved 011: B25 (AUX3) 100: reserved 101: B1/B66/n256 (AUX2, AUX3) 110: B21/B32/n75/n76/n253/n255 (AUX4*, AUX5) 111: B30 (AUX6) * AUX4 does not have optimum performance for these bands	3b000	M	T0	R/W

Confidential

Specifications provided are for evaluation purposes only and are subject to change without notice. This product is in pre-production and may not meet the listed specifications.
© 2025 Qorvo US, Inc. – Confidential and Proprietary Information – Subject to Non-Disclosure Agreement

RX Reg03 (0x03) - LNA_OUT3

Bit(s)	Field Name	Description	Default	B/G/M	Trig	R/W
7:5	OUT3_LNA_SEL_A[2:0]	LNA selection for LNA_OUT3 000: ISOLATION 001: LNA1 010: LNA2 011: LNA3 100: LNA4 101: LNA5 110: LNA6 111: reserved Note: In case of conflict, prirority is defined as N41_SPLITTER > OUT3_LNA_SEL_B > OUT3_LNA_SEL_A. LNA selection in this bitfield is valid ONLY IF OUT3_LNA_SEL_B = 0.	3b000	M	T0	R/W
4:3	OUT3_INPUT_SEL[1:0]	for LNA1 00: ISOLATION 01: 3R 10: 39R 11: 25R for LNA2 00: ISOLATION 01: reserved 10: AUX2 11: AUX1 for LNA3 00: ISOLATION 01: 1R 10: 34/PCSR 11: 66R for LNA4 00: ISOLATION 01: AUX5 10: 41R 11: 7R for LNA5 00: ISOLATION 01: AUX3 10: reserved 11: AUX4 for LNA6 00: ISOLATION 01: AUX6 10: 40R 11: reserved	2b00	M	T0	R/W
2:0	OUT3_TUNE_SEL[2:0]	LNA frequency tuning for AUX ports. This bitfield has no influence on internal bands. Tuning for internal bands is automatically chosen through OUTx_INPUT_SEL selection. 000: B3 (AUX2, AUX3) 001: B41/B7 (AUX1, AUX4), B53/n254 (AUX1, AUX2, AUX4) 010: reserved 011: B25 (AUX3) 100: reserved 101: B1/B66/n256 (AUX2, AUX3) 110: B21/B32/n75/n76/n253/n255 (AUX4*, AUX5) 111: B30 (AUX6) * AUX4 does not have optimum performance for these bands	3b000	M	T0	R/W

Confidential

Specifications provided are for evaluation purposes only and are subject to change without notice. This product is in pre-production and may not meet the listed specifications.
© 2025 Qorvo US, Inc. – Confidential and Proprietary Information – Subject to Non-Disclosure Agreement

RX Reg04 (0x04) - LNA_OUT4

Bit(s)	Field Name	Description	Default	B/G/M	Trig	R/W
7:5	OUT4_LNA_SEL_A[2:0]	LNA selection for LNA_OUT4 000: ISOLATION 001: LNA1 010: LNA2 011: LNA3 100: LNA4 101: LNA5 110: LNA6 111: reserved Note: In case of conflict, prirority is defined as N41_SPLITTER > OUT4_LNA_SEL_B > OUT4_LNA_SEL_A. LNA selection in this bitfield is valid ONLY IF OUT4_LNA_SEL_B = 0.	3b000	M	T0	R/W
4:3	OUT4_INPUT_SEL[1:0]	for LNA1 00: ISOLATION 01: 3R 10: 39R 11: 25R for LNA2 00: ISOLATION 01: reserved 10: AUX2 11: AUX1 for LNA3 00: ISOLATION 01: 1R 10: 34/PCSR 11: 66R for LNA4 00: ISOLATION 01: AUX5 10: 41R 11: 7R for LNA5 00: ISOLATION 01: AUX3 10: reserved 11: AUX4 for LNA6 00: ISOLATION 01: AUX6 10: 40R 11: reserved	2b00	M	T0	R/W
2:0	OUT4_TUNE_SEL[2:0]	LNA frequency tuning for AUX ports. This bitfield has no influence on internal bands. Tuning for internal bands is automatically chosen through OUTx_INPUT_SEL selection. 000: B3 (AUX2, AUX3) 001: B41/B7 (AUX1, AUX4), B53/n254 (AUX1, AUX2, AUX4) 010: reserved 011: B25 (AUX3) 100: reserved 101: B1/B66/n256 (AUX2, AUX3) 110: B21/B32/n75/n76/n253/n255 (AUX4*, AUX5) 111: B30 (AUX6) * AUX4 does not have optimum performance for these bands	3b000	M	T0	R/W

Confidential

Specifications provided are for evaluation purposes only and are subject to change without notice. This product is in pre-production and may not meet the listed specifications.
© 2025 Qorvo US, Inc. – Confidential and Proprietary Information – Subject to Non-Disclosure Agreement

RX Reg07 (0x07) - LNA1_CTRL

Bit(s)	Field Name	Description	Default	B/G/M	Trig	R/W
7	LNA1_EN_A	0: LNA off 1: LNA on Note: The setting in this bitfield is valid ONLY IF LNA1_EN_B = 0.	1b0	Yes	mT-A	R/W
6:3	LNA1_GAIN[3:0]	0000 = Gain0 (21 dB) 0001 = Gain1 (18 dB) 0010 = Gain2 (15 dB) 0011 = Gain3 (12 dB) 0100 = Gain4 (9 dB) 0101 = Gain5 (6 dB) 0110 = Gain6 (0 dB) 0111 = Gain7 (-3 dB, active) 1000 = Gain8 (-6 dB, passive) 1001 = Gain9 (-12 dB, passive) 1010 = Gain10 (-3 dB, passive) 1011 - 1111 = reserved	4b0000	Yes	mT-A	R/W
2:0	LNA1_BIAS[2:0]	LNA1 Bias control	3b000	Yes	mT-A	R/W

RX Reg08 (0x08) - LNA2_CTRL

Bit(s)	Field Name	Description	Default	B/G/M	Trig	R/W
7	LNA2_EN_A	0: LNA off 1: LNA on Note: The setting in this bitfield is valid ONLY IF LNA2_EN_B = 0.	1b0	Yes	mT-B	R/W
6:3	LNA2_GAIN[3:0]	0000 = Gain0 (21 dB) 0001 = Gain1 (18 dB) 0010 = Gain2 (15 dB) 0011 = Gain3 (12 dB) 0100 = Gain4 (9 dB) 0101 = Gain5 (6 dB) 0110 = Gain6 (0 dB) 0111 = Gain7 (-3 dB, active) 1000 = Gain8 (-6 dB, passive) 1001 = Gain9 (-12 dB, passive) 1010 = Gain10 (-3 dB, passive) 1011 - 1111 = reserved	4b0000	Yes	mT-B	R/W
2:0	LNA2_BIAS[2:0]	LNA2 Bias control	3b000	Yes	mT-B	R/W

Confidential

Specifications provided are for evaluation purposes only and are subject to change without notice. This product is in pre-production and may not meet the listed specifications.
© 2025 Qorvo US, Inc. – Confidential and Proprietary Information – Subject to Non-Disclosure Agreement

RX Reg09 (0x09) - LNA3_CTRL

Bit(s)	Field Name	Description	Default	B/G/M	Trig	R/W
7	LNA3_EN_A	0: LNA off 1: LNA on Note: The setting in this bitfield is valid ONLY IF LNA3_EN_B = 0.	1b0	Yes	mT-C	R/W
6:3	LNA3_GAIN[3:0]	0000 = Gain0 (21 dB) 0001 = Gain1 (18 dB) 0010 = Gain2 (15 dB) 0011 = Gain3 (12 dB) 0100 = Gain4 (9 dB) 0101 = Gain5 (6 dB) 0110 = Gain6 (0 dB) 0111 = Gain7 (-3 dB, active) 1000 = Gain8 (-6 dB, passive) 1001 = Gain9 (-12 dB, passive) 1010 = Gain10 (-3 dB, passive) 1011 - 1111 = reserved	4b0000	Yes	mT-C	R/W
2:0	LNA3_BIAS[2:0]	LNA2 Bias control	3b000	Yes	mT-C	R/W

RX Reg10 (0x0A) - LNA4_CTRL

Bit(s)	Field Name	Description	Default	B/G/M	Trig	R/W
7	LNA4_EN_A	0: LNA off 1: LNA on Note: The setting in this bitfield is valid ONLY IF LNA4_EN_B = 0.	1b0	Yes	mT-D	R/W
6:3	LNA4_GAIN[3:0]	0000 = Gain0 (21 dB) 0001 = Gain1 (18 dB) 0010 = Gain2 (15 dB) 0011 = Gain3 (12 dB) 0100 = Gain4 (9 dB) 0101 = Gain5 (6 dB) 0110 = Gain6 (0 dB) 0111 = Gain7 (-3 dB, active) 1000 = Gain8 (-6 dB, passive) 1001 = Gain9 (-12 dB, passive) 1010 = Gain10 (-3 dB, passive) 1011 - 1111 = reserved	4b0000	Yes	mT-D	R/W
2:0	LNA4_BIAS[2:0]	LNA4 Bias control	3b000	Yes	mT-D	R/W

Confidential

Specifications provided are for evaluation purposes only and are subject to change without notice. This product is in pre-production and may not meet the listed specifications.
© 2025 Qorvo US, Inc. – Confidential and Proprietary Information – Subject to Non-Disclosure Agreement

RX Reg11 (0x0B) - LNA5_CTRL

Bit(s)	Field Name	Description	Default	B/G/M	Trig	R/W
7	LNA5_EN_A	0: LNA off 1: LNA on Note: The setting in this bitfield is valid ONLY IF LNA5_EN_B = 0.	1b0	Yes	mT-E	R/W
6:3	LNA5_GAIN[3:0]	0000 = Gain0 (21 dB) 0001 = Gain1 (18 dB) 0010 = Gain2 (15 dB) 0011 = Gain3 (12 dB) 0100 = Gain4 (9 dB) 0101 = Gain5 (6 dB) 0110 = Gain6 (0 dB) 0111 = Gain7 (-3 dB, active) 1000 = Gain8 (-6 dB, passive) 1001 = Gain9 (-12 dB, passive) 1010 = Gain10 (-3 dB, passive) 1011 - 1111 = reserved	4b0000	Yes	mT-E	R/W
2:0	LNA5_BIAS[2:0]	LNA4 Bias control	3b000	Yes	mT-E	R/W

RX Reg12 (0x0C) - LNA6_CTRL

Bit(s)	Field Name	Description	Default	B/G/M	Trig	R/W
7	LNA6_EN_A	0: LNA off 1: LNA on Note: The setting in this bitfield is valid ONLY IF LNA6_EN_B = 0.	1b0	Yes	mT-F	R/W
6:3	LNA6_GAIN[3:0]	0000 = Gain0 (21 dB) 0001 = Gain1 (18 dB) 0010 = Gain2 (15 dB) 0011 = Gain3 (12 dB) 0100 = Gain4 (9 dB) 0101 = Gain5 (6 dB) 0110 = Gain6 (0 dB) 0111 = Gain7 (-3 dB, active) 1000 = Gain8 (-6 dB, passive) 1001 = Gain9 (-12 dB, passive) 1010 = Gain10 (-3 dB, passive) 1011 - 1111 = reserved	4b0000	Yes	mT-F	R/W
2:0	LNA6_BIAS[2:0]	LNA4 Bias control	3b000	Yes	mT-F	R/W

Confidential

Specifications provided are for evaluation purposes only and are subject to change without notice. This product is in pre-production and may not meet the listed specifications.
© 2025 Qorvo US, Inc. – Confidential and Proprietary Information – Subject to Non-Disclosure Agreement

RX Reg13 (0x0D) - LNA_OUT1_CTRL_B

Bit(s)	Field Name	Description	Default	B/G/M	Trig	R/W
7:5	OUT1_LNA_SEL_B[2:0]	LNA selection for LNA_OUT1 000: ISOLATION 001: LNA1 010: LNA2 011: LNA3 100: LNA4 101: LNA5 110: LNA6 111: reserved Note: In case of conflict, prirority is defined as N41_SPLITTER > OUT1_LNA_SEL_B > OUT1_LNA_SEL_A.	3b000	M	T1	R/W
4:0	reserved_reg13_b4_b0	reserved	5b00000	M	T1	R

RX Reg14 (0x0E) - LNA_OUT2_CTRL_B

Bit(s)	Field Name	Description	Default	B/G/M	Trig	R/W
7:5	OUT2_LNA_SEL_B[2:0]	LNA selection for LNA_OUT2 000: ISOLATION 001: LNA1 010: LNA2 011: LNA3 100: LNA4 101: LNA5 110: LNA6 111: reserved Note: In case of conflict, prirority is defined as N41_SPLITTER > OUT2_LNA_SEL_B > OUT2_LNA_SEL_A.	3b000	M	T1	R/W
4:0	reserved_reg14_b4_b0	reserved	5b00000	M	T1	R

RX Reg15 (0x0F) - LNA_OUT3_CTRL_B

Bit(s)	Field Name	Description	Default	B/G/M	Trig	R/W
7:5	OUT3_LNA_SEL_B[2:0]	LNA selection for LNA_OUT3 000: ISOLATION 001: LNA1 010: LNA2 011: LNA3 100: LNA4 101: LNA5 110: LNA6 111: reserved Note:In case of conflict, prirority is defined as N41_SPLITTER > OUT3_LNA_SEL_B > OUT3_LNA_SEL_A.	3b000	M	T1	R/W
4:0	reserved_reg15_b4_b0	reserved	5b00000	M	T1	R

Confidential

Specifications provided are for evaluation purposes only and are subject to change without notice. This product is in pre-production and may not meet the listed specifications.
© 2025 Qorvo US, Inc. – Confidential and Proprietary Information – Subject to Non-Disclosure Agreement

RX Reg16 (0x10) - LNA_OUT4_CTRL_B

Bit(s)	Field Name	Description	Default	B/G/M	Trig	R/W
7:5	OUT4_LNA_SEL_B[2:0]	LNA selection for LNA_OUT4 000: ISOLATION 001: LNA1 010: LNA2 011: LNA3 100: LNA4 101: LNA5 110: LNA6 111: reserved Note: In case of conflict, prirority is defined as N41_SPLITTER > OUT4_LNA_SEL_B > OUT4_LNA_SEL_A.	3b000	M	T1	R/W
4:0	reserved_reg16_b4_b0	reserved	5b00000	M	T1	R

RX Reg19 (0x13) - LNA1_EN_CTRL_B

Bit(s)	Field Name	Description	Default	B/G/M	Trig	R/W
7	LNA1_EN_B	0: LNA off 1: LNA on Note: The setting in this bitfield has priority over LNA1_EN_A .	1b0	Yes	T0	R/W
6:0	reserved_reg19_b6_b0	reserved	7b0000000	Yes	T0	R

RX Reg20 (0x14) - LNA2_EN_CTRL_B

Bit(s)	Field Name	Description	Default	B/G/M	Trig	R/W
7	LNA2_EN_B	0: LNA off 1: LNA on Note: The setting in this bitfield has priority over LNA2_EN_A.	1b0	Yes	T0	R/W
6:0	reserved_reg20_b6_b0	reserved	7b0000000	Yes	T0	R

RX Reg21 (0x15) - LNA3_EN_CTRL_B

Bit(s)	Field Name	Description	Default	B/G/M	Trig	R/W
7	LNA3_EN_B	0: LNA off 1: LNA on Note: The setting in this bitfield has priority over LNA3_EN_A.	1b0	Yes	T0	R/W
6:0	reserved_reg21_b6_b0	reserved	7b0000000	Yes	T0	R

RX Reg22 (0x16) - LNA4_EN_CTRL_B

Bit(s)	Field Name	Description	Default	B/G/M	Trig	R/W
7	LNA4_EN_B	0: LNA off 1: LNA on Note: The setting in this bitfield has priority over LNA4_EN_A.	1b0	Yes	T0	R/W
6:0	reserved_reg22_b6_b0	reserved	7b0000000	Yes	T0	R

Confidential

Specifications provided are for evaluation purposes only and are subject to change without notice. This product is in pre-production and may not meet the listed specifications.
© 2025 Qorvo US, Inc. – Confidential and Proprietary Information – Subject to Non-Disclosure Agreement

RX Reg23 (0x17) - LNA5_EN_CTRL_B

Bit(s)	Field Name	Description	Default	B/G/M	Trig	R/W
7	LNA5_EN_B	0: LNA off 1: LNA on Note: The setting in this bitfield has priority over LNA5_EN_A.	1b0	Yes	T0	R/W
6:0	reserved_reg23_b6_b0	reserved	7b0000000	Yes	T0	R

RX Reg24 (0x18) - LNA6_EN_CTRL_B

Bit(s)	Field Name	Description	Default	B/G/M	Trig	R/W
7	LNA6_EN_B	0: LNA off 1: LNA on Note: The setting in this bitfield has priority over LNA6_EN_A.	1b0	Yes	T0	R/W
6:0	reserved_reg24_b6_b0	reserved	7b0000000	Yes	T0	R

RX Reg25 (0x19) - TRIGGER_CTRL_1

Bit(s)	Field Name	Description	Default	B/G/M	Trig	R/W
7:4	MTRIG_A[3:0]	Trigger assignment for mTrig-A Program MHB1 LNA OPMode Register Trigger ID, Assign which EXT_Trigger to LNA OPMode Register 0000 : assign EXT_Trigger3 to MHB1 LNA 0001 : assign EXT_Trigger4 to MHB1 LNA 0010 : assign EXT_Trigger5 to MHB1 LNA 0011 : assign EXT_Trigger6 to MHB1 LNA 0100 : assign EXT_Trigger7 to MHB1 LNA 0101 : assign EXT_Trigger8 to MHB1 LNA 0110 : assign EXT_Trigger9 to MHB1 LNA 0111 : assign EXT_Trigger10 to MHB1 LNA 1000 : assign EXT_Trigger11 to MHB1 LNA 1001 : assign EXT_Trigger12 to MHB1 LNA 1010 : assign EXT_Trigger13 to MHB1 LNA 1011 : assign EXT_Trigger14 to MHB1 LNA 1100 : assign EXT_Trigger15 to MHB1 LNA 1101 : assign EXT_Trigger16 to MHB1 LNA 1110 : assign EXT_Trigger17 to MHB1 LNA 1111: Masked = Write to destination	4b0000	Yes	No	R/W

Confidential

Specifications provided are for evaluation purposes only and are subject to change without notice. This product is in pre-production and may not meet the listed specifications.
© 2025 Qorvo US, Inc. – Confidential and Proprietary Information – Subject to Non-Disclosure Agreement

Bit(s)	Field Name	Description	Default	B/G/M	Trig	R/W
3:0	MTRIG_B[3:0]	Trigger assignment for mTrig-B Program MHB2 LNA OPMode Register Trigger ID，Assign which EXT_Trigger to LNA OPMode Register 0000：assign EXT_Trigger3 to MHB2 LNA 0001：assign EXT_Trigger4 to MHB2 LNA 0010：assign EXT_Trigger5 to MHB2 LNA 0011：assign EXT_Trigger6 to MHB2 LNA 0100：assign EXT_Trigger7 to MHB2 LNA 0101：assign EXT_Trigger8 to MHB2 LNA 0110：assign EXT_Trigger9 to MHB2 LNA 0111：assign EXT_Trigger10 to MHB2 LNA 1000：assign EXT_Trigger11 to MHB2 LNA 1001：assign EXT_Trigger12 to MHB2 LNA 1010：assign EXT_Trigger13 to MHB2 LNA 1011：assign EXT_Trigger14 to MHB2 LNA 1100：assign EXT_Trigger15 to MHB2 LNA 1101：assign EXT_Trigger16 to MHB2 LNA 1110：assign EXT_Trigger17 to MHB2 LNA 1111: Masked = Write to destination	4b0001	Yes	No	R/W

RX Reg26 (0x1A) - TRIGGER_CTRL_2

Bit(s)	Field Name	Description	Default	B/G/M	Trig	R/W
7:4	MTRIG_C[3:0]	Trigger assignment for mTrig-C Program MHB3 LNA OPMode Register Trigger ID，Assign which EXT_Trigger to LNA OPMode Register 0000：assign EXT_Trigger3 to MHB3 LNA 0001：assign EXT_Trigger4 to MHB3 LNA 0010：assign EXT_Trigger5 to MHB3 LNA 0011：assign EXT_Trigger6 to MHB3 LNA 0100：assign EXT_Trigger7 to MHB3 LNA 0101：assign EXT_Trigger8 to MHB3 LNA 0110：assign EXT_Trigger9 to MHB3 LNA 0111：assign EXT_Trigger10 to MHB3 LNA 1000：assign EXT_Trigger11 to MHB3 LNA 1001：assign EXT_Trigger12 to MHB3 LNA 1010：assign EXT_Trigger13 to MHB3 LNA 1011：assign EXT_Trigger14 to MHB3 LNA 1100：assign EXT_Trigger15 to MHB3 LNA 1101：assign EXT_Trigger16 to MHB3 LNA 1110：assign EXT_Trigger17 to MHB3 LNA 1111: Masked = Write to destination	4b0010	Yes	No	R/W

Confidential

Specifications provided are for evaluation purposes only and are subject to change without notice. This product is in pre-production and may not meet the listed specifications.
© 2025 Qorvo US, Inc. – Confidential and Proprietary Information – Subject to Non-Disclosure Agreement

Bit(s)	Field Name	Description	Default	B/G/M	Trig	R/W
3:0	MTRIG_D[3:0]	Trigger assignment for mTrig-D Program MHB4 LNA OPMode Register Trigger ID，Assign which EXT_Trigger to LNA OPMode Register 0000：assign EXT_Trigger3 to MHB4 LNA 0001：assign EXT_Trigger4 to MHB4 LNA 0010：assign EXT_Trigger5 to MHB4 LNA 0011：assign EXT_Trigger6 to MHB4 LNA 0100：assign EXT_Trigger7 to MHB4 LNA 0101：assign EXT_Trigger8 to MHB4 LNA 0110：assign EXT_Trigger9 to MHB4 LNA 0111：assign EXT_Trigger10 to MHB4 LNA 1000：assign EXT_Trigger11 to MHB4 LNA 1001：assign EXT_Trigger12 to MHB4 LNA 1010：assign EXT_Trigger13 to MHB4 LNA 1011：assign EXT_Trigger14 to MHB4 LNA 1100：assign EXT_Trigger15 to MHB4 LNA 1101：assign EXT_Trigger16 to MHB4 LNA 1110：assign EXT_Trigger17 to MHB4 LNA 1111: Masked = Write to destination	4b0011	Yes	No	R/W

RX Reg27 (0x1B) - TRIGGER_CTRL_3

Bit(s)	Field Name	Description	Default	B/G/M	Trig	R/W
7:4	MTRIG_E[3:0]	Trigger assignment for mTrig-E Program MHB5 LNA OPMode Register Trigger ID，Assign which EXT_Trigger to LNA OPMode Register 0000：assign EXT_Trigger3 to MHB5 LNA 0001：assign EXT_Trigger4 to MHB5 LNA 0010：assign EXT_Trigger5 to MHB5 LNA 0011：assign EXT_Trigger6 to MHB5 LNA 0100：assign EXT_Trigger7 to MHB5 LNA 0101：assign EXT_Trigger8 to MHB5 LNA 0110：assign EXT_Trigger9 to MHB5 LNA 0111：assign EXT_Trigger10 to MHB5 LNA 1000：assign EXT_Trigger11 to MHB5 LNA 1001：assign EXT_Trigger12 to MHB5 LNA 1010：assign EXT_Trigger13 to MHB5 LNA 1011：assign EXT_Trigger14 to MHB5 LNA 1100：assign EXT_Trigger15 to MHB5 LNA 1101：assign EXT_Trigger16 to MHB5 LNA 1110：assign EXT_Trigger17 to MHB5 LNA 1111: Masked = Write to destination	4b0100	Yes	No	R/W

Confidential

Specifications provided are for evaluation purposes only and are subject to change without notice. This product is in pre-production and may not meet the listed specifications.
© 2025 Qorvo US, Inc. – Confidential and Proprietary Information – Subject to Non-Disclosure Agreement

Bit(s)	Field Name	Description	Default	B/G/M	Trig	R/W
3:0	MTRIG_F[3:0]	Trigger assignment for mTrig-F Program MHB6 LNA OPMode Register Trigger ID, Assign which EXT_Trigger to LNA OPMode Register 0000 : assign EXT_Trigger3 to MHB6 LNA 0001 : assign EXT_Trigger4 to MHB6 LNA 0010 : assign EXT_Trigger5 to MHB6 LNA 0011 : assign EXT_Trigger6 to MHB6 LNA 0100 : assign EXT_Trigger7 to MHB6 LNA 0101 : assign EXT_Trigger8 to MHB6 LNA 0110 : assign EXT_Trigger9 to MHB6 LNA 0111 : assign EXT_Trigger10 to MHB6 LNA 1000 : assign EXT_Trigger11 to MHB6 LNA 1001 : assign EXT_Trigger12 to MHB6 LNA 1010 : assign EXT_Trigger13 to MHB6 LNA 1011 : assign EXT_Trigger14 to MHB6 LNA 1100 : assign EXT_Trigger15 to MHB6 LNA 1101 : assign EXT_Trigger16 to MHB6 LNA 1110 : assign EXT_Trigger17 to MHB6 LNA 1111: Masked = Write to destination	4b0101	Yes	No	R/W

RX reg28 (0x1C) - PM_TRIG

Bit(s)	Field Name	Description	Default	B/G/M	Trig	R/W
7	PWR_MODE	0: Normal operation (ACTIVE) 1: Secondary mode (LOW POWER)	1b1	B/G	No	R/W
6	PWR_STATE	0: Normal operation 1: initialization state note - this bit always reads 0. Writing a 1 to this bit forces a reset.	1b0	B/G	No	R/W
5:3	TRIGGERMASK[2:0]	Setting these bits to '1' will cause the corresponding triggers to be masked (disabled), and RFFE writes to corresponding registers will change configuration immediately (no trigger command necessary). TriggerMask[2] = TriggerMask_2, TriggerMask[1] = TriggerMask_1, & TriggerMask[0] = TriggerMask_0 Note: Qorvo does not allow for changing the trigger mask and sending triggers within the same RFFE write.	3b000	No	No	R/W
2:0	TRIGGER[2:0]	Setting these bits to '1' will cause the registers associated with that trigger to be loaded with the contents of its corresponding shadow register. Trigger[2] = Trigger_2, Trigger[1] = Trigger_1, and Trigger[0] = Trigger_0 Note: Qorvo does not allow for changing the trigger mask and sending triggers within the same RFFE write.	3b000	B/G	No	R/W

Confidential

Specifications provided are for evaluation purposes only and are subject to change without notice. This product is in pre-production and may not meet the listed specifications.
© 2025 Qorvo US, Inc. – Confidential and Proprietary Information – Subject to Non-Disclosure Agreement

RX reg29 (0x1D) - PRODUCT_ID

Bit(s)	Field Name	Description	Default	B/G/M	Trig	R/W
7:0	PRODUCT_ID[7:0]	This is a read-only register. However, during the programming of the USID a write command sequence is performed on this register, even though the write does not change its value. 0xA5 for QM77498	8b10100101	No	No	RM

RX reg30 (0x1E) - MAN_ID

Bit(s)	Field Name	Description	Default	B/G/M	Trig	R/W
7:0	MANUFACTURER_ID_LSB [7:0]	This is a read-only register. However, during the programming of the USID, a write command sequence is performed on this register, even though the write does not change its value. Note: This is the lower 8 least significant bits of the RFFE's MANUFACTURER_ID (i.e. MANUFACTURER_ID[7:0] = MANUFACTURER_ID_LSB[7:0]	8b11000110	No	No	RM

RX reg31 (0x1F) - MAN_US_ID

Bit(s)	Field Name	Description	Default	B/G/M	Trig	R/W
7:4	MANUFACTURER_ID_MSB [3:0]	These bits are read-only. However, during the programming of the USID, a write command sequence is performed on this register even though the write does not change its value. Note: This is the up 2 most significant bits of the RFFE's MANUFACTURER_ID (i.e. MANUFACTURER_ID[9:8] = MANUFACTURER_ID_MSB[1:0]	4b0011	No	No	RM
3:0	USID[3:0]	Programmable USID. Performing a write to this register using the described programming sequences will program the USID in devices supporting this feature. These bits store the USID of the device.	4b0010	No	No	RM

RX reg32 (0x20) - EXT_PRODUCT_ID

Bit(s)	Field Name	Description	Default	B/G/M	Trig	R/W
7:0	EXT_PRODUCT_ID[7:0]	This is a read-only register. However, during the programming of the USID a write command sequence is performed on this register, even though the write does not change its value.	8b00000000	No	No	RM

RX reg33 (0x21) - REVISION_ID

Bit(s)	Field Name	Description	Default	B/G/M	Trig	R/W
7:0	REVISION_ID[7:0]	This is an RFFE2 register to contain information about the revision of this module. The intent here is to use this as a type of scratch register -- to contain various information or serialization.	8b00000000	No	No	RM

Confidential

Specifications provided are for evaluation purposes only and are subject to change without notice. This product is in pre-production and may not meet the listed specifications.
© 2025 Qorvo US, Inc. – Confidential and Proprietary Information – Subject to Non-Disclosure Agreement

RX reg34 (0x22) - GROUP_ID

Bit(s)	Field Name	Description	Default	B/G/M	Trig	R/W
7:4	GSID0[3:0]	Group slave ID 0	4b0000	No	No	R/W
3:0	GSID1[3:0]	Group slave ID 1	4b0000	No	No	R/W

RX reg35 (0x23) - UDR_RST

Bit(s)	Field Name	Description	Default	B/G/M	Trig	R/W
7	SW_RESET	UDR_RST 0: Normal operation 1: Software reset (reset of all configurable registers to default values, except for USID)	1b0	B/G	No	R/W
6	reserved_reg35_b6	Reserved	1b0	No	No	R
5	reserved_reg35_b5	Reserved	1b0	No	No	R
4	reserved_reg35_b4	Reserved	1b0	No	No	R
3	reserved_reg35_b3	Reserved	1b0	No	No	R
2	reserved_reg35_b2	Reserved	1b0	No	No	R
1	reserved_reg35_b1	Reserved	1b0	No	No	R
0	reserved_reg35_b0	Reserved	1b0	No	No	R

RX reg36 (0x24) - ERR_SUM

Bit(s)	Field Name	Description	Default	B/G/M	Trig	R/W
7	reserved_reg36_b7	Reserved	1b0	No	No	R
6	CMD_FRAME_P_ERR	Command sequence received with parity error – discard command.	1b0	No	No	R
5	CMD_LEN_ERR	Command length error	1b0	No	No	R
4	ADDR_FRAME_P_ERR	Address frame parity error = 1	1b0	No	No	R
3	DATA_FRAME_P_ERR	Data frame with parity error	1b0	No	No	R
2	READ_UNUSED_REG	Read command to an invalid address	1b0	No	No	R
1	WRITE_UNUSED_REG	Write command to an invalid address	1b0	No	No	R
0	BID_GID_ERR	Read command with a Broadcast_ID or GROUP_ID	1b0	No	No	R

RX reg43 (0x2B) - BUS_LOAD

Bit(s)	Field Name	Description	Default	B/G/M	Trig	R/W
7:4	reserved_reg43_b7_b4	Reserved	4b0000	No	No	R0
3:0	BUS_LD[3:0]	SDATA Driver strength in Readback Mode 0x0: 10 pF 0x1: 20 pF 0x2: 30 pF 0x3: 40 pF 0x4: 50 pF 0x5: 60 pF 0x6: 80 pF 0x7: 100 pF 0x8: 120 pF 0x9: 140 pF 0xA: 160 pF 0xB: 180 pF 0xC: 200 pF 0xD: 250 pF 0xE-0xF: reserved	4b0100	No	No	R/W

RX reg44 (0x2C) - TEST_PATTERN

Bit(s)	Field Name	Description	Default	B/G/M	Trig	R/W
7:0	TEST_PATTERN[7:0]	A read of this register returns the test pattern	8b11010010	No	No	R

Confidential

Specifications provided are for evaluation purposes only and are subject to change without notice. This product is in pre-production and may not meet the listed specifications.
© 2025 Qorvo US, Inc. – Confidential and Proprietary Information – Subject to Non-Disclosure Agreement

RX Reg45 (0x2D) - EXT_TRIG_A_MASK

Bit(s)	Field Name	Description	Default	B/G/M	Trig	R/W
7:0	EXT_TRIGGER_A_MASK[7:0]	Setting these bits to '1' will cause the corresponding triggers to be masked (disabled), and RFFE writes to corresponding registers will change configuration immediately (no trigger command necessary). Ext_Trigger_Mask[7] = TriggerMask_10 ... Ext_Trigger_Mask[0] = TriggerMask_3	8b00000000	No	No	R/W

RX Reg46 (0x2E) - EXT_TRIGGER_A

Bit(s)	Field Name	Description	Default	B/G/M	Trig	R/W
7:0	EXT_TRIGGER_A[7:0]	Setting these bits to '1' will cause the registers associated with that trigger to be loaded with the contents of its corresponding shadow register. Ext_Trigger[7] = Trigger_10 ... Ext_Trigger[0] = Trigger_3	8b00000000	B/G	No	R/W

RX Reg47 (0x2F) - EXT_TRIGGER_B

Bit(s)	Field Name	Description	Default	B/G/M	Trig	R/W
7:0	EXT_TRIGGER_B[7:0]	Setting these bits to '1' will cause the registers associated with that trigger to be loaded with the contents of its corresponding shadow register. Ext_Trigger_B_Reg[6] = Ext_Trigger_17 ... Ext_Trigger_A_Reg[0] = Ext_Trigger_11	8b00000000	B/G	No	R/W

RX Reg48 (0x30) - EXT_TRIG_B_MASK

Bit(s)	Field Name	Description	Default	B/G/M	Trig	R/W
7:0	EXT_TRIGGER_B_MASK[7:0]	Setting these bits to '1' will cause the corresponding triggers to be masked (disabled), and RFFE writes to corresponding registers will change configuration immediately (No trigger command necessary). Ext_Trigger_B_Mask[6] = Ext_Trigger_Mask_17 ... Ext_Trigger_B_Mask[0] = Ext_Trigger_Mask_11	8b00000000	No	No	R/W

RX Reg49 (0x31) - EXT_TRIG_B_CNT_11

Bit(s)	Field Name	Description	Default	B/G/M	Trig	R/W
7:0	EXT_TRIG_B_CNT_11[8:1]	Ext Trigger 11 Timer Count writing a non-zero value to this register loads the 8 msb of the 9-bit trigger timer. The timer decrements on every SCLK and the trigger is asserted when the timer hits 0.	8b00000000	B/G	No	R/W

Confidential

Specifications provided are for evaluation purposes only and are subject to change without notice. This product is in pre-production and may not meet the listed specifications.
© 2025 Qorvo US, Inc. – Confidential and Proprietary Information – Subject to Non-Disclosure Agreement

RX Reg50 (0x32) - EXT_TRIG_B_CNT_12

Bit(s)	Field Name	Description	Default	B/G/M	Trig	R/W
7:0	EXT_TRIG_B_CNT_12[8:1]	Ext Trigger 12 Timer Count writing a non-zero value to this register loads the 8 msb of the 9-bit trigger timer. The timer decrements on every SCLK and the trigger is asserted when the timer hits 0.	8b00000000	B/G	No	R/W

RX Reg51 (0x33) - EXT_TRIG_B_CNT_13

Bit(s)	Field Name	Description	Default	B/G/M	Trig	R/W
7:0	EXT_TRIG_B_CNT_13[8:1]	Ext Trigger 13 Timer Count writing a non-zero value to this register loads the 8 msb of the 9-bit trigger timer. The timer decrements on every SCLK and the trigger is asserted when the timer hits 0.	8b00000000	B/G	No	R/W

RX Reg52 (0x34) - EXT_TRIG_B_CNT_14

Bit(s)	Field Name	Description	Default	B/G/M	Trig	R/W
7:0	EXT_TRIG_B_CNT_14[8:1]	Ext Trigger 14 Timer Count writing a non-zero value to this register loads the 8 msb of the 9-bit trigger timer. The timer decrements on every SCLK and the trigger is asserted when the timer hits 0.	8b00000000	B/G	No	R/W

RX Reg53 (0x35) - EXT_TRIG_B_CNT_15

Bit(s)	Field Name	Description	Default	B/G/M	Trig	R/W
7:0	EXT_TRIG_B_CNT_15[8:1]	Ext Trigger 15 Timer Count writing a non-zero value to this register loads the 8 msb of the 9-bit trigger timer. The timer decrements on every SCLK and the trigger is asserted when the timer hits 0.	8b00000000	B/G	No	R/W

RX Reg54 (0x36) - EXT_TRIG_B_CNT_16

Bit(s)	Field Name	Description	Default	B/G/M	Trig	R/W
7:0	EXT_TRIG_B_CNT_16[8:1]	Ext Trigger 16 Timer Count writing a non-zero value to this register loads the 8 msb of the 9-bit trigger timer. The timer decrements on every SCLK and the trigger is asserted when the timer hits 0.	8b00000000	B/G	No	R/W

Confidential

Specifications provided are for evaluation purposes only and are subject to change without notice. This product is in pre-production and may not meet the listed specifications.
© 2025 Qorvo US, Inc. – Confidential and Proprietary Information – Subject to Non-Disclosure Agreement

RX Reg55 (0x37) - EXT_TRIG_B_CNT_17

Bit(s)	Field Name	Description	Default	B/G/M	Trig	R/W
7:0	EXT_TRIG_B_CNT_17[8:1]	Ext Trigger 17 Timer Count writing a non-zero value to this register loads the 8 msb of the 9-bit trigger timer. The timer decrements on every SCLK and the trigger is asserted when the timer hits 0.	8b00000000	B/G	No	R/W

RX Reg56 (0x38) - EXT_TRIG_CNT3

Bit(s)	Field Name	Description	Default	B/G/M	Trig	R/W
7:0	EXT_TRIG_CNT3[7:0]	Ext Trigger 3 Timer Count writing a non-zero value to this register loads the 8 msb of the 9-bit trigger timer. The timer decrements on every SCLK and the trigger is asserted when the timer hits 0.	8b00000000	B/G	No	R/W

RX Reg57 (0x39) - EXT_TRIG_CNT4

Bit(s)	Field Name	Description	Default	B/G/M	Trig	R/W
7:0	EXT_TRIG_CNT4[7:0]	Ext Trigger 4 Timer Count writing a non-zero value to this register loads the 8 msb of the 9-bit trigger timer. The timer decrements on every SCLK and the trigger is asserted when the timer hits 0.	8b00000000	B/G	No	R/W

RX Reg58 (0x3A) - EXT_TRIG_CNT5

Bit(s)	Field Name	Description	Default	B/G/M	Trig	R/W
7:0	EXT_TRIG_CNT5[7:0]	Ext Trigger 5 Timer Count writing a non-zero value to this register loads the 8 msb of the 9-bit trigger timer. The timer decrements on every SCLK and the trigger is asserted when the timer hits 0.	8b00000000	B/G	No	R/W

RX Reg59 (0x3B) - EXT_TRIG_CNT6

Bit(s)	Field Name	Description	Default	B/G/M	Trig	R/W
7:0	EXT_TRIG_CNT6[7:0]	Ext Trigger 6 Timer Count writing a non-zero value to this register loads the 8 msb of the 9-bit trigger timer. The timer decrements on every SCLK and the trigger is asserted when the timer hits 0.	8b00000000	B/G	No	R/W

RX Reg60 (0x3C) - EXT_TRIG_CNT7

Bit(s)	Field Name	Description	Default	B/G/M	Trig	R/W
7:0	EXT_TRIG_CNT7[7:0]	Ext Trigger 7 Timer Count writing a non-zero value to this register loads the 8 msb of the 9-bit trigger timer. The timer decrements on every SCLK and the trigger is asserted when the timer hits 0.	8b00000000	B/G	No	R/W

Confidential

Specifications provided are for evaluation purposes only and are subject to change without notice. This product is in pre-production and may not meet the listed specifications.
© 2025 Qorvo US, Inc. – Confidential and Proprietary Information – Subject to Non-Disclosure Agreement

RX Reg61 (0x3D) - EXT_TRIG_CNT8

Bit(s)	Field Name	Description	Default	B/G/M	Trig	R/W
7:0	EXT_TRIG_CNT8[7:0]	Ext Trigger 8 Timer Count writing a non-zero value to this register loads the 8 msb of the 9-bit trigger timer. The timer decrements on every SCLK and the trigger is asserted when the timer hits 0.	8b00000000	B/G	No	R/W

RX Reg62 (0x3E) - EXT_TRIG_CNT9

Bit(s)	Field Name	Description	Default	B/G/M	Trig	R/W
7:0	EXT_TRIG_CNT9[7:0]	Ext Trigger 9 Timer Count writing a non-zero value to this register loads the 8 msb of the 9-bit trigger timer. The timer decrements on every SCLK and the trigger is asserted when the timer hits 0.	8b00000000	B/G	No	R/W

RX Reg63 (0x3F) - EXT_TRIG_CNT10

Bit(s)	Field Name	Description	Default	B/G/M	Trig	R/W
7:0	EXT_TRIG_CNT10[7:0]	Ext Trigger 10 Timer Count writing a non-zero value to this register loads the 8 msb of the 9-bit trigger timer. The timer decrements on every SCLK and the trigger is asserted when the timer hits 0.	8b00000000	B/G	No	R/W

[INCOMPLETE]

Confidential

Specifications provided are for evaluation purposes only and are subject to change without notice. This product is in pre-production and may not meet the listed specifications.
© 2025 Qorvo US, Inc. – Confidential and Proprietary Information – Subject to Non-Disclosure Agreement

9. Application Information

Application Circuit Schematic

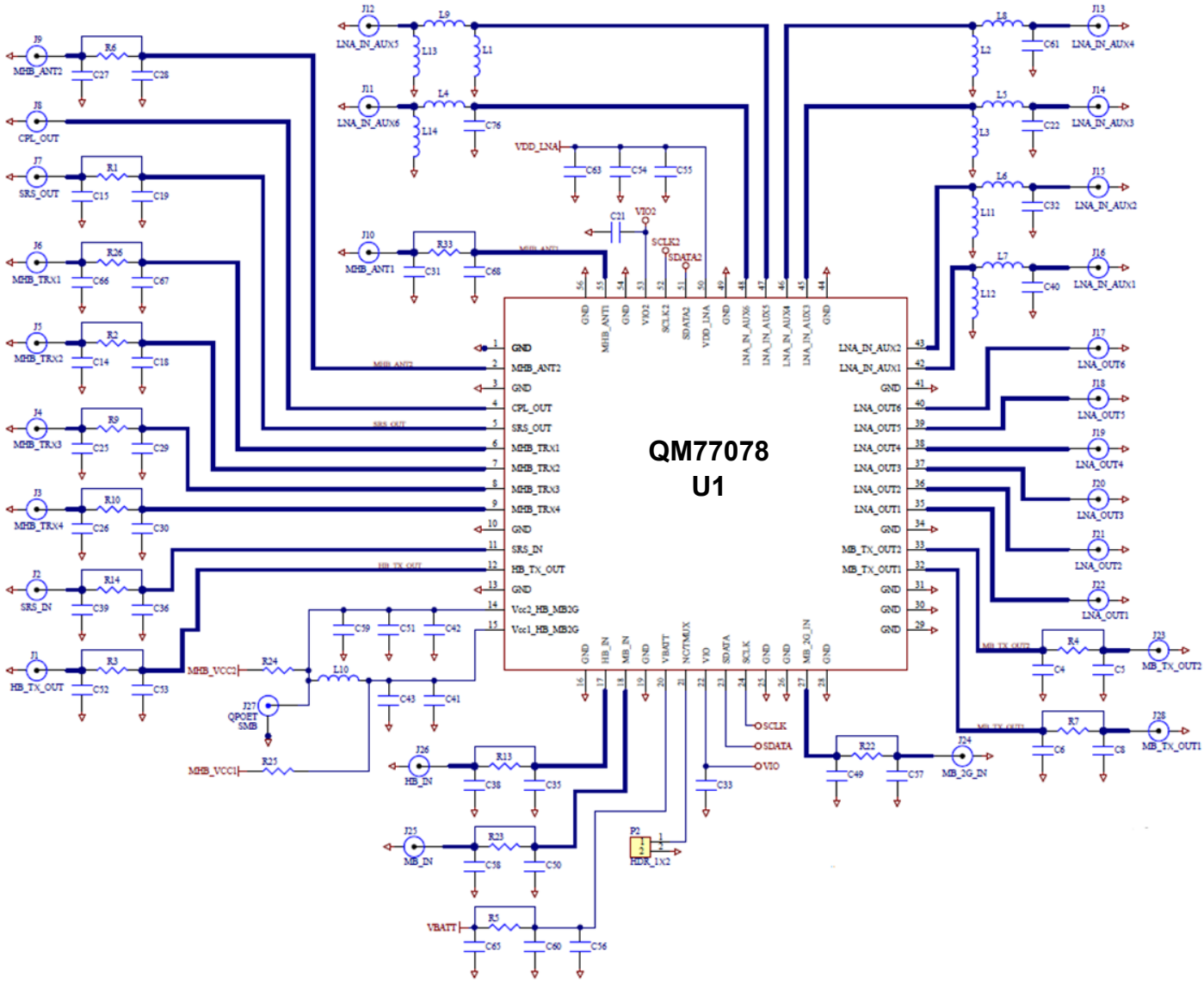

Specifications provided are for evaluation purposes only and are subject to change without notice. This product is in pre-production and may not meet the listed specifications.
© 2025 Qorvo US, Inc. – Confidential and Proprietary Information – Subject to Non-Disclosure Agreement

10. Packaging and Ordering Information

Device Marking and Package Dimensions

Marking: Part number – QM77078

Trace code – XXXX

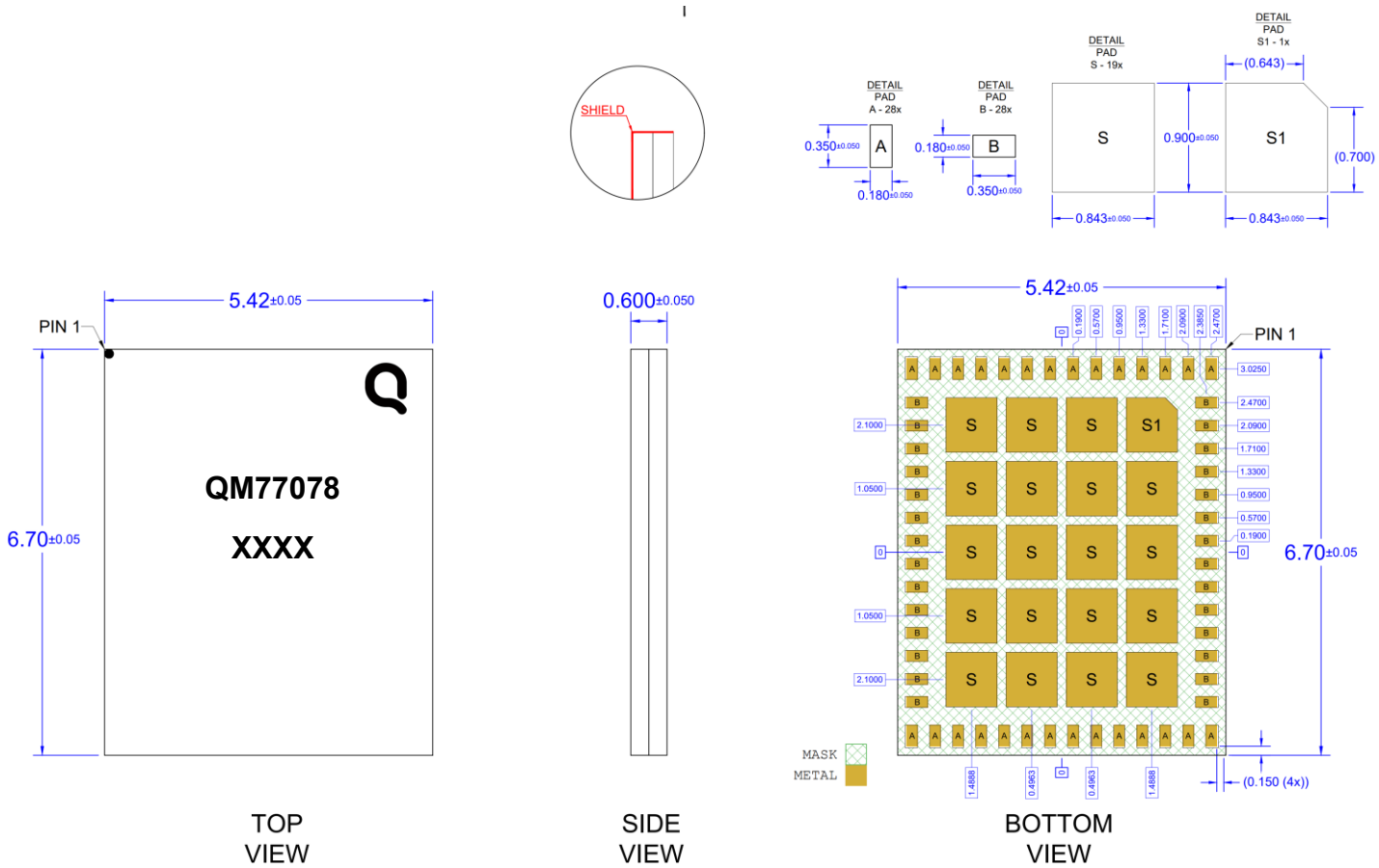

Notes:

1. All dimensions are in microns. Angles are in degrees.
2. Dimension and tolerance formats conform to ASME Y14.4M-1994.
3. The terminal #1 identifier and terminal numbering conform to JESD 95-1 SPP-012.

Specifications provided are for evaluation purposes only and are subject to change without notice. This product is in pre-production and may not meet the listed specifications.
© 2025 Qorvo US, Inc. – Confidential and Proprietary Information – Subject to Non-Disclosure Agreement

PCB Footprint Recommendations

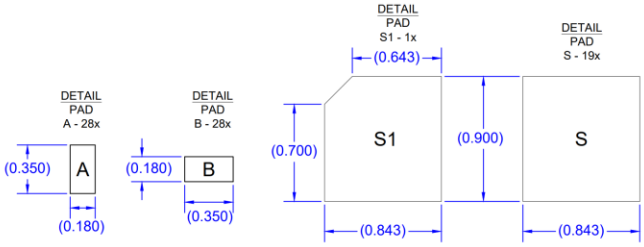

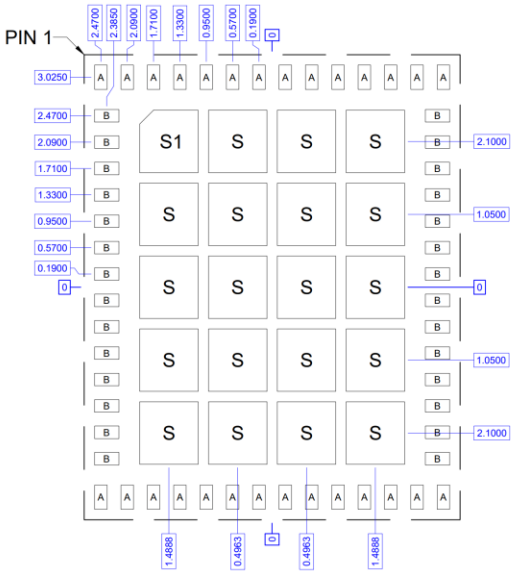

RECOMMENDED
LAND PATTERN

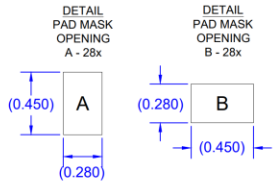

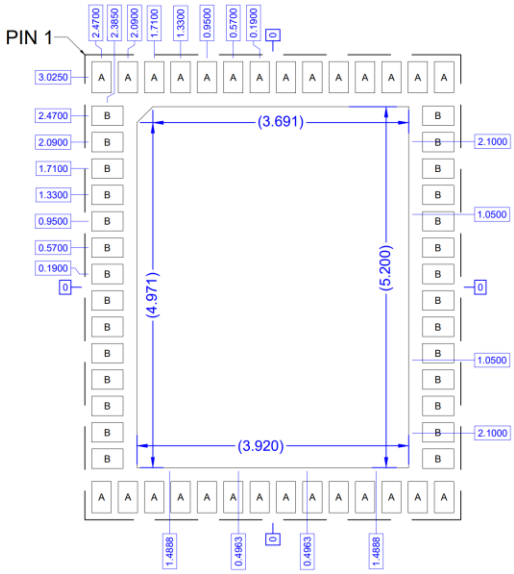

RECOMMENDED
LAND PATTERN MASK

Specifications provided are for evaluation purposes only and are subject to change without notice. This product is in pre-production and may not meet the listed specifications.
© 2025 Qorvo US, Inc. – Confidential and Proprietary Information – Subject to Non-Disclosure Agreement

Tape and Reel Information – Carrier and Cover Tape Dimensions

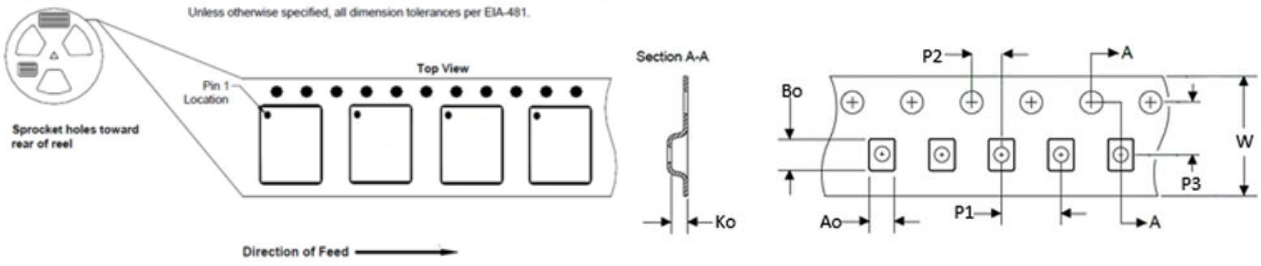

Feature	Measure	Symbol	Size (in)	Size (mm)
Cavity	Length	A0	0.224	5.7
	Width	B0	0.276	7.0
	Depth	K0	0.035	0.9
	Pitch	P1	0.314	8
Centerline Distance	Cavity to Perforation - Length Direction	P2	0.079	2.0
	Cavity to Perforation - Width Direction	F	0.295	7.50
Cover Tape	Width	C	0.524	13.3
Carrier Tape	Width	W	0.630	16.0

Tape and Reel Information – Reel Dimensions

Packaging reels are used to prevent damage to devices during shipping and storage, loaded carrier tape is typically wound onto a plastic take-up reel. The reel size is 13” diameter. The reels are made from high-impact injection-molded polystyrene (HIPS), which offers mechanical and ESD protection to packaged devices.

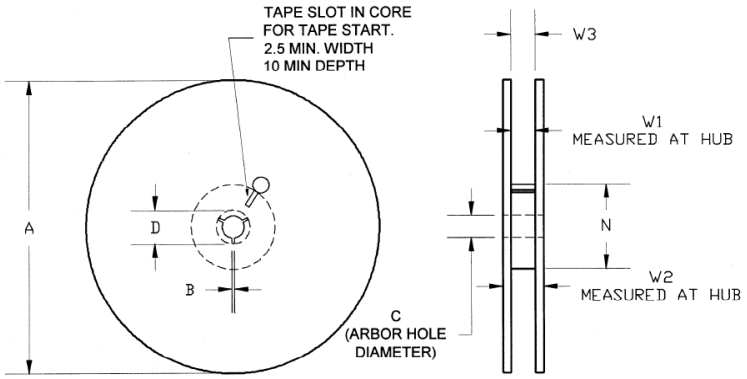

Feature	Measure	Symbol	Size (in)	Size (mm)
Flange	Diameter	A	12.992	330
	Thickness	W2	0.874	22.2
	Space Between Flange	W1	0.066	16.8
Hub	Outer Diameter	N	4.016	102.0
	Arbor Hole Diameter	C	0.512	13.0
	Key Slit Width	B	0.079	2.0
	Key Slit Diameter	D	0.795	20.2

Specifications provided are for evaluation purposes only and are subject to change without notice. This product is in pre-production and may not meet the listed specifications.
© 2025 Qorvo US, Inc. – Confidential and Proprietary Information – Subject to Non-Disclosure Agreement

Tape and Reel Information – Tape Length and Label Placement

Tape and reel specifications for this part are also available on the Qorvo website.

Standard T/R size =2500 pieces on a 13” reel.

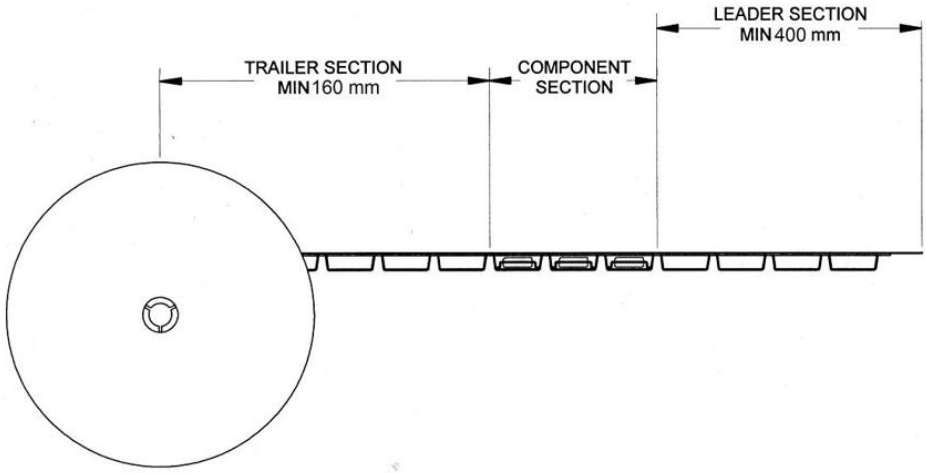

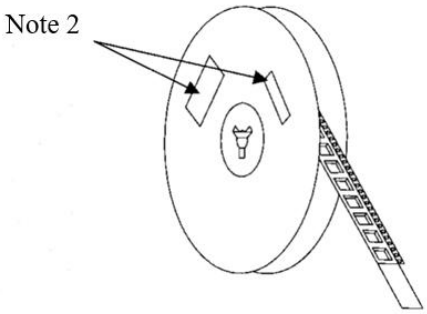

Notes:

1. Empty part cavities at the trailing and leading ends are sealed with cover tape. See EIA 481.
2. Labels are placed on the flange opposite the sprockets in the carrier tape.

Confidential

Specifications provided are for evaluation purposes only and are subject to change without notice. This product is in pre-production and may not meet the listed specifications.
© 2025 Qorvo US, Inc. – Confidential and Proprietary Information – Subject to Non-Disclosure Agreement

11. Handling Precautions

Parameter	Rating	Standard
ESD – Human Body Model (HBM)	Class 1C	ESDA/JEDEC JS-001-2012
ESD – Charged Device Model (CDM)	Class C2a	JEDEC JESD22-C101F
MSL – Moisture Sensitivity Level	Level 3	IPC/JEDEC J-STD-020

Caution!

ESD sensitive device

12. Solderability

Compatible with both lead-free (260 °C max. reflow temperature) and tin/lead (245 °C max. reflow temperature) soldering processes.

Package lead plating: Plated Au over Ni

13. Environmental Compliance

This part is compliant with the 2011/65/EU RoHS directive (Restrictions on the Use of Certain Hazardous Substances in Electrical and Electronic Equipment), as amended by Directive 2015/863/EU.

This product also has the following attributes:

- Halogen Free (Chlorine, Bromine)
- Antimony Free
- SVHC Free
- TBBP-A ($C_{15}H_{12}Br_4O_2$) Free

Confidential

Specifications provided are for evaluation purposes only and are subject to change without notice. This product is in pre-production and may not meet the listed specifications.
© 2025 Qorvo US, Inc. – Confidential and Proprietary Information – Subject to Non-Disclosure Agreement

14. Revision History

Revision	Date	Description
Brief	2025-07-10	Product Introduction
Brief	2025-10-23	Update block diagram. Add Register Maps.

Confidential

Specifications provided are for evaluation purposes only and are subject to change without notice. This product is in pre-production and may not meet the listed specifications.
© 2025 Qorvo US, Inc. – Confidential and Proprietary Information – Subject to Non-Disclosure Agreement

Confidential

Contact Information

For the latest specifications, additional product information, worldwide sales and distribution locations:

Web: www.qorvo.com

Tel: +1 844-890-8163

Email: customer.support@qorvo.com

Important Notices

The information contained in this Data Sheet and any associated documents ("Data Sheet Information") is believed to be reliable; however, Qorvo makes no warranties regarding the Data Sheet Information and assumes no responsibility or liability whatsoever for the use of or reliance on said information. All Data Sheet Information is subject to change without notice. Customers should obtain and verify the latest relevant Data Sheet Information before placing orders for Qorvo® products. Information concerning Qorvo's product life cycles is available at https://www.qorvo.com/support/product-lifecycle-information. Data Sheet Information or the use thereof does not grant, explicitly, implicitly or otherwise any rights or licenses with respect to patents or any other intellectual property whether with regard to such Data Sheet Information itself or anything described by such information.

Qorvo grants you permission to use this Data Sheet and any associated resources only to develop an application that uses the Qorvo products described in the Data Sheet and any associated resources. Other reproduction and display of this Data Sheet and any associated resources is prohibited.

Qorvo's products are provided subject to Qorvo's Terms of Sale or provided in conjunction with such Qorvo products. Qorvo objects to and rejects any additional or different terms customer may have proposed regarding the purchase of Qorvo products.

DATA SHEET INFORMATION DOES NOT CONSTITUTE A WARRANTY WITH RESPECT TO THE PRODUCTS DESCRIBED HEREIN, AND QORVO HEREBY DISCLAIMS ANY AND ALL WARRANTIES WITH RESPECT TO SUCH PRODUCTS WHETHER EXPRESS OR IMPLIED BY LAW, COURSE OF DEALING, COURSE OF PERFORMANCE, USAGE OF TRADE OR OTHERWISE, INCLUDING THE IMPLIED WARRANTIES OF MERCHANTABILITY AND FITNESS FOR A PARTICULAR PURPOSE. Without limiting the generality of the foregoing, Qorvo® products are not warranted or authorized for use as critical components in medical, life-saving, or life-sustaining applications, or other applications where a failure would reasonably be expected to cause severe personal injury or death. Applications described in the Data Sheet Information are for illustrative purposes only. Customers are responsible for validating that a particular product described in the Data Sheet Information is suitable for use in a particular application.

© 2025 Qorvo US, Inc. All rights reserved. This document is subject to copyright laws in various jurisdictions worldwide and may not be reproduced or distributed, in whole or in part, without the express written consent of Qorvo US, Inc.

QORVO® is a registered trademark of Qorvo US, Inc. All other trademarks and trade names are property of their respective owners.

Specifications provided are for evaluation purposes only and are subject to change without notice. This product is in pre-production and may not meet the listed specifications.
© 2025 Qorvo US, Inc. – Confidential and Proprietary Information – Subject to Non-Disclosure Agreement