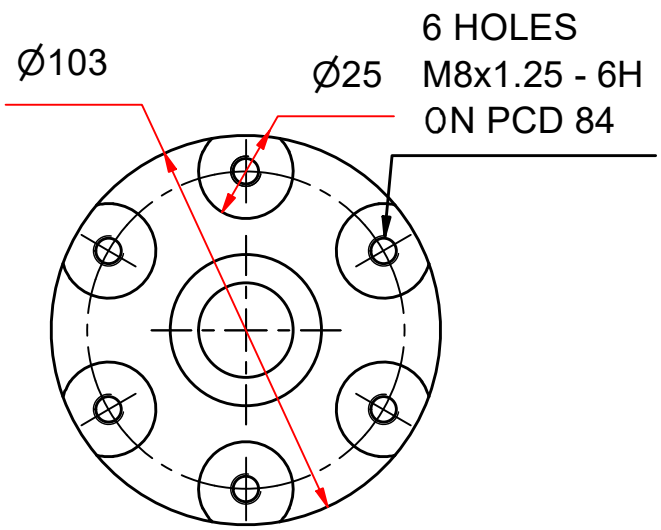

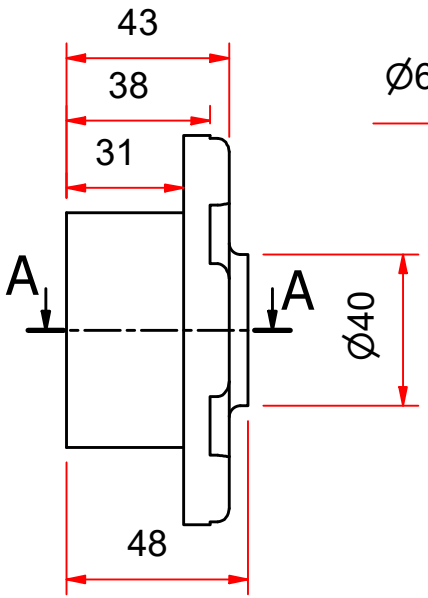

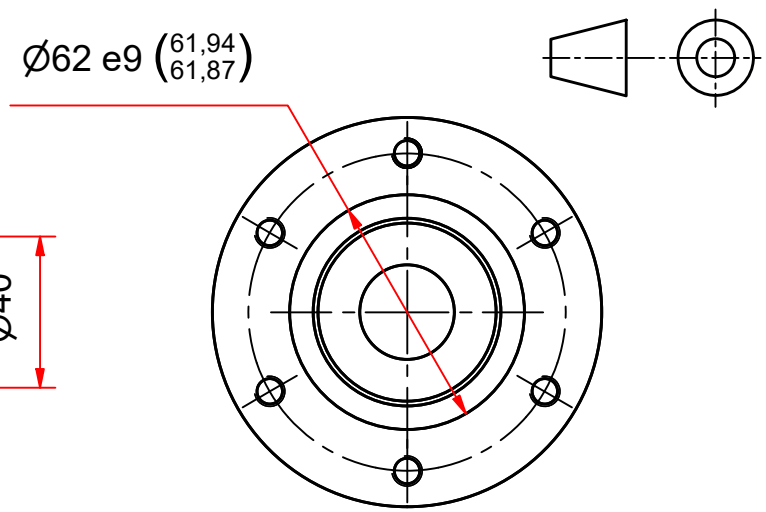

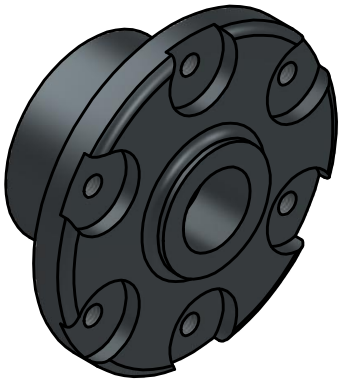

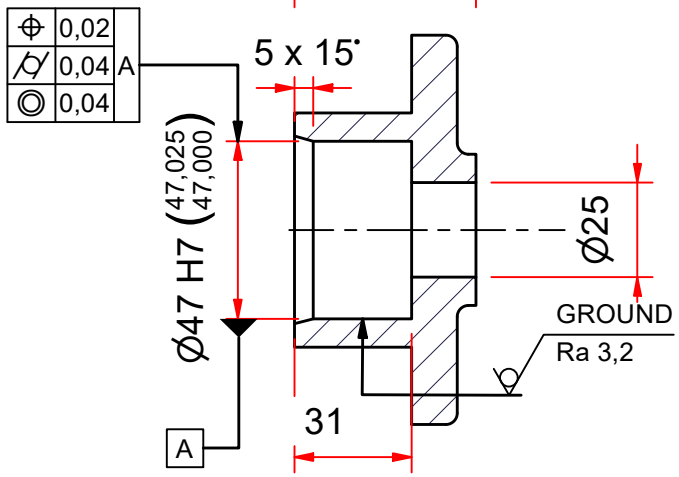

A-A (1 : 2)

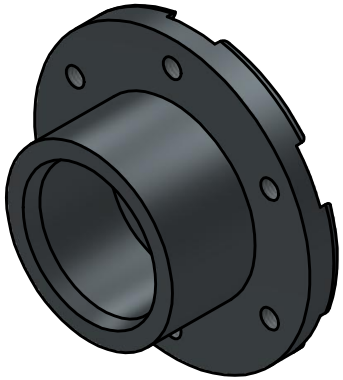

UNLESS OTHERWISE STATED
TOLERANCES ± 0,1
ANGLES 1˚

Parts List

ITEM	DESCRIPTION	Qty.	MATERIAL / SPECIFICATIONS
1	DEKSEL / END CAP	1	CAST IRON (Ø103x48)

UNIVERSITEIT VAN STELLENBOSCH

SCALE ON A4 1:2
UNITS IN mm
TITLE: DEKSEL / END CAP

STUDENT Nr. 28178564 | **DRAWN BY** EL JOUBERT | **CHECKED** | **DATE** 2025/10/21 | **SHEET Nr.** 1 **OF** 1 **SHEETS** | **Nr.** 003