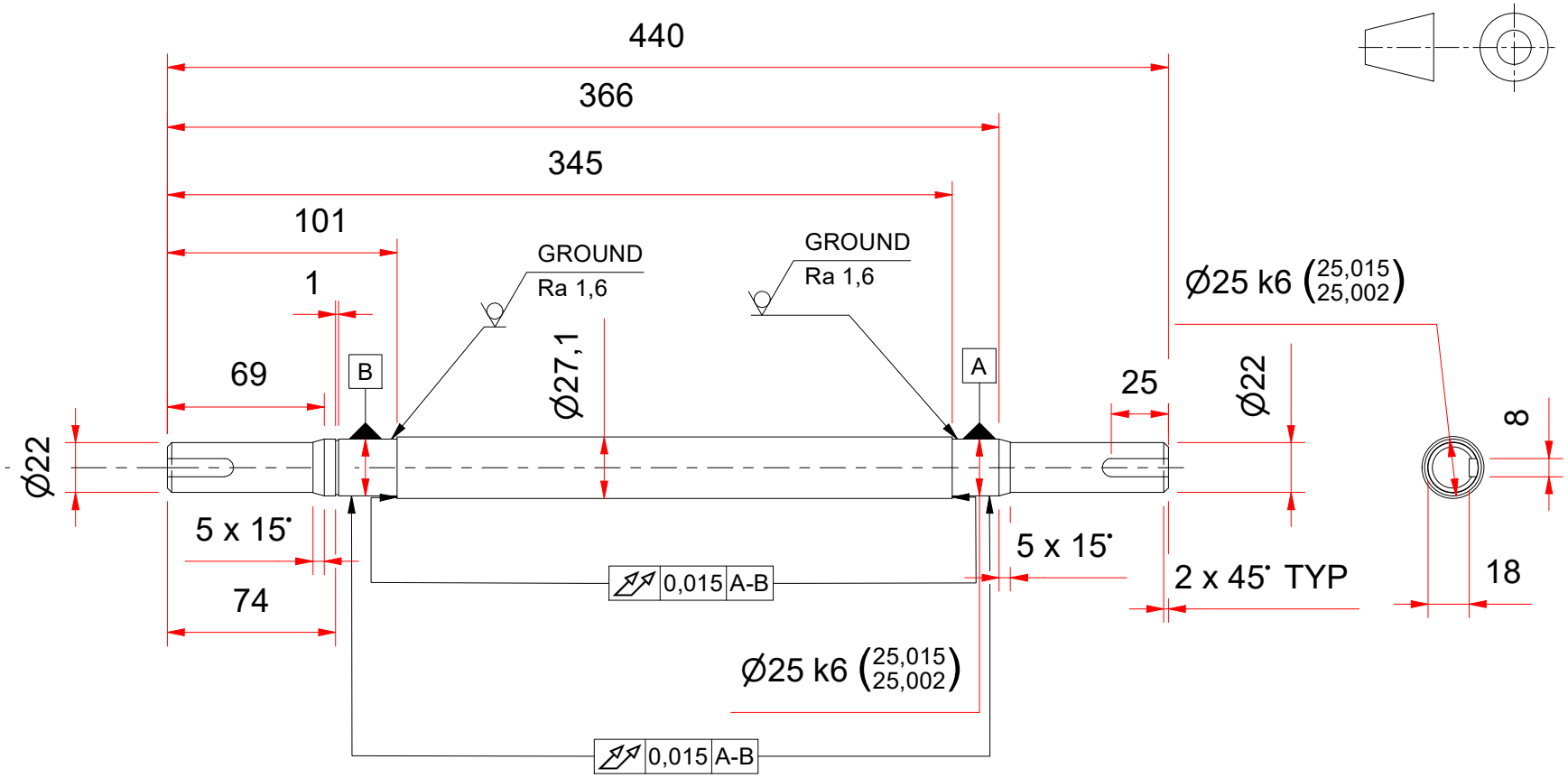

UNLESS OTHERWISE STATED

TOLERANCES ± 0,1

ANGLES 1˚

Parts List			
1	AS / SHAFT	1	STEEL 1431/350WA (Ø27x440)
ITEM	**DESCRIPTION**	**Qty.**	**MATERIAL / SPECIFICATIONS**

UNIVERSITEIT VAN STELLENBOSCH

SCALE ON A4 = 1:3	**TITLE:** AS / SHAFT		
UNITS IN mm			
STUDENT Nr. 28123875	**DRAWN BY** A.G.A. HESS	**CHECKED**	**DATE** 21/10/2025
SHEET Nr. 1 **OF** 1 **SHEETS**	**Nr.** 001		