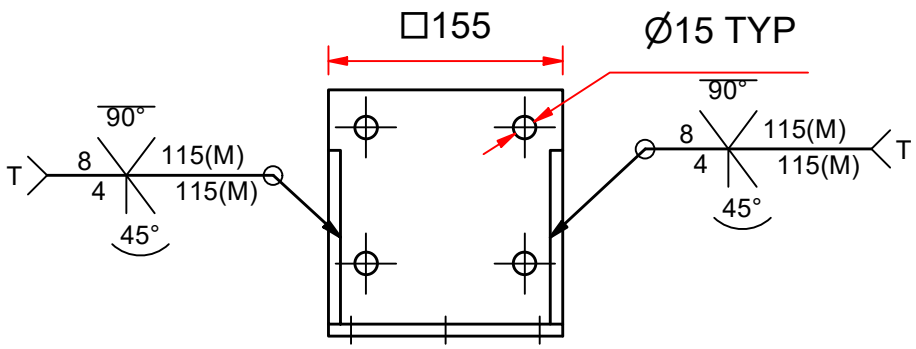

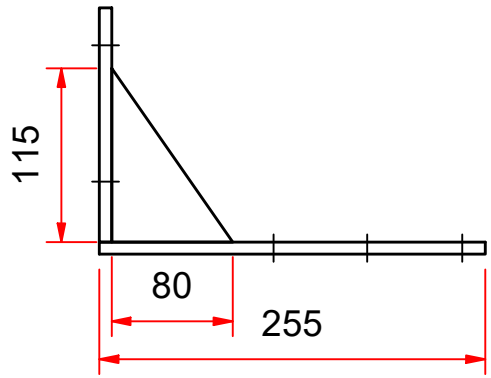

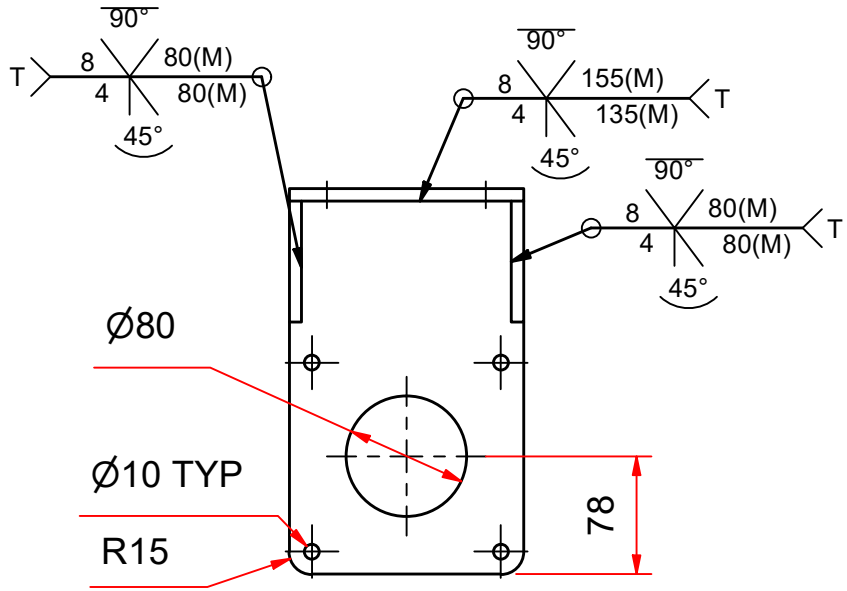

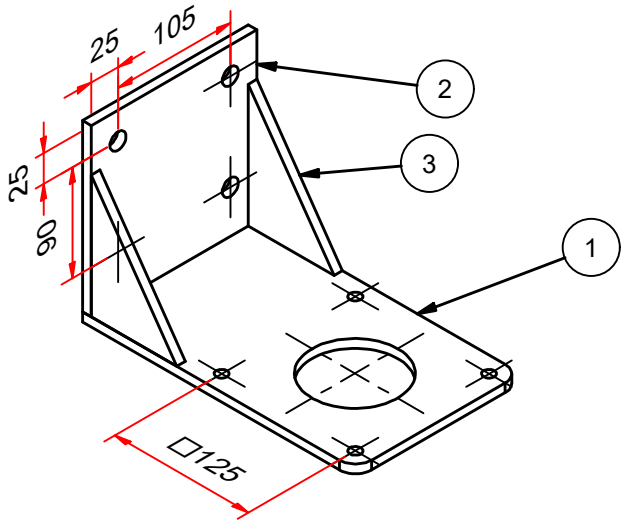

PLATE THICKNESS: 8 mm

UNLESS OTHERWISE STATED
TOLERANCES ± 0,1
ANGLES 1˚

Parts List

ITEM	DESCRIPTION	Qty.	MATERIAL / SPECIFICATIONS
3	GUSSET	2	STEEL, MILD (115x80x8)
2	SIDE	1	STEEL, MILD (155x155x8)
1	BASE	1	STEEL, MILD (255x155x8)

UNIVERSITEIT VAN STELLENBOSCH

SCALE ON A 4 = 1:5
UNITS IN mm
TITLE: BRACKET

STUDENT Nr. 28123875 | DRAWN BY A.G.A. HESS | CHECKED | DATE 21/10/2025 | SHEET Nr. 1 OF 1 SHEETS | Nr. 002