Weld-Brau

GET SYSTEM GUIDE

(+266) 62699479
(+266) 56116277

mojalefaphakisi@gmail.com

BUCKET TEETH & ADAPTERS

- VANGUARD SYSTEM
- CAT STYLE
- V SERIES
- CONICAL STYLE
- DAEWOO STYLE
- KEECH STYLE
- KOMATSU STYLE
- H&L STYLE
- HENSLEY STYLE
- HYUNDAI STYLE
- VOLVO STYLE
- JCB STYLE

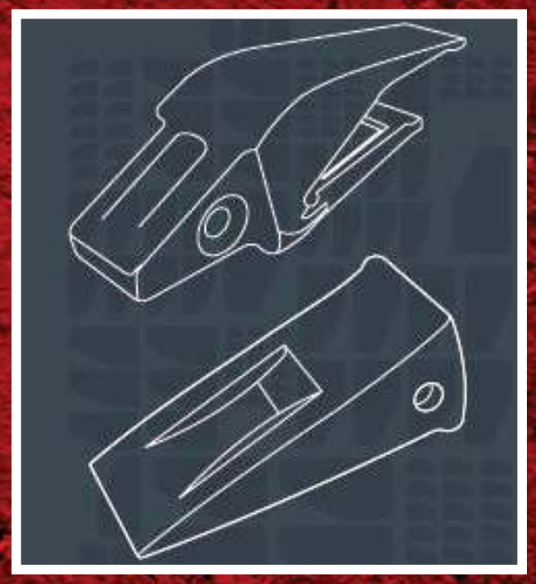

Vanguard System

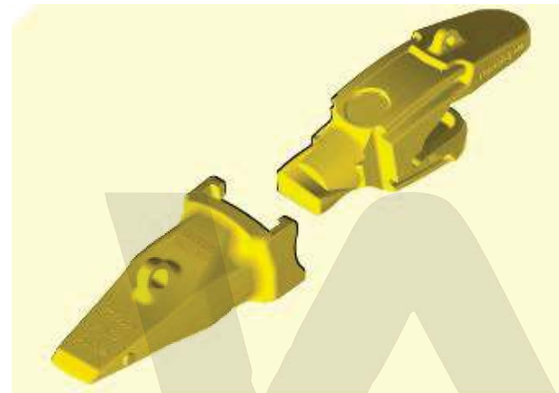

Vanguard is a GET system designed for excavator buckets that uses proprietary materials and is engineered for exceptional performance and long-life in high-impact mining applications.

VANGUARD TOOTH SYSTEM

1. Wear cap protects the adapter
2. Vanguard tooth
3. Vanguard adapter

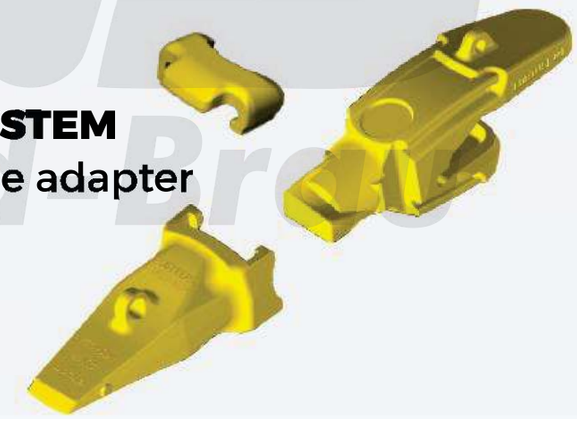

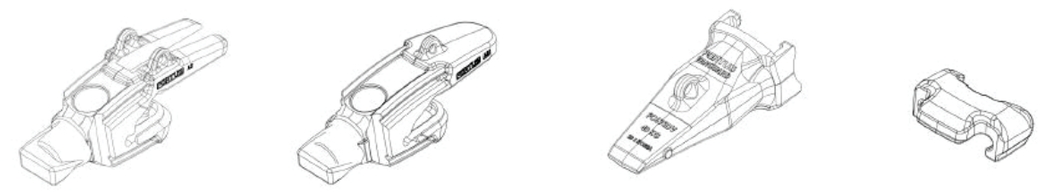

ADAPTERS

FC2713-1222D

FC2713-1237D

A (mm)	B (mm)	C (mm)	Weight	Series
54	210	171	7.9kg	130
93	185	275	29kg	460

Looking for a part to buy?
Need advice?
TALK TO OUR TEAM

Hyundai Style

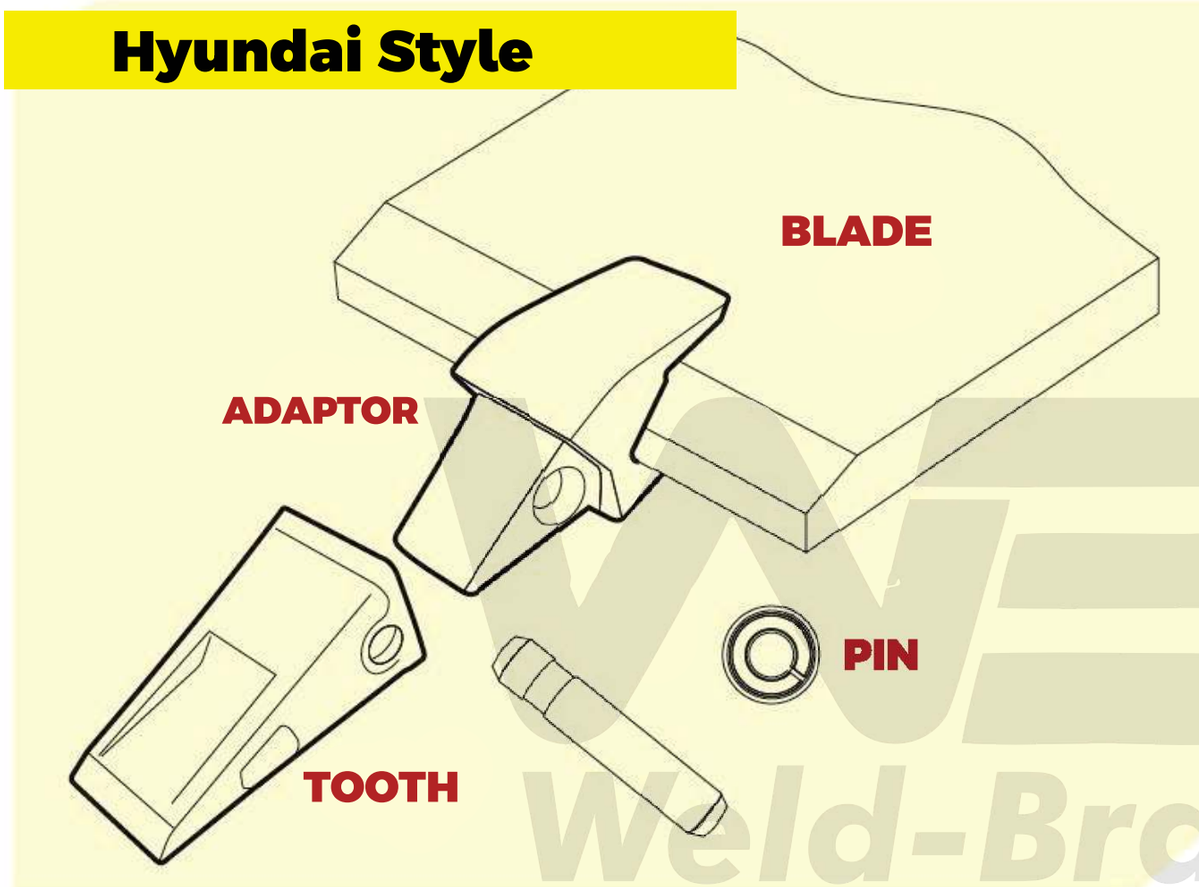

Hyundai style incorporate a horizontal 2 piece pin and work to improve digging performance and retention.

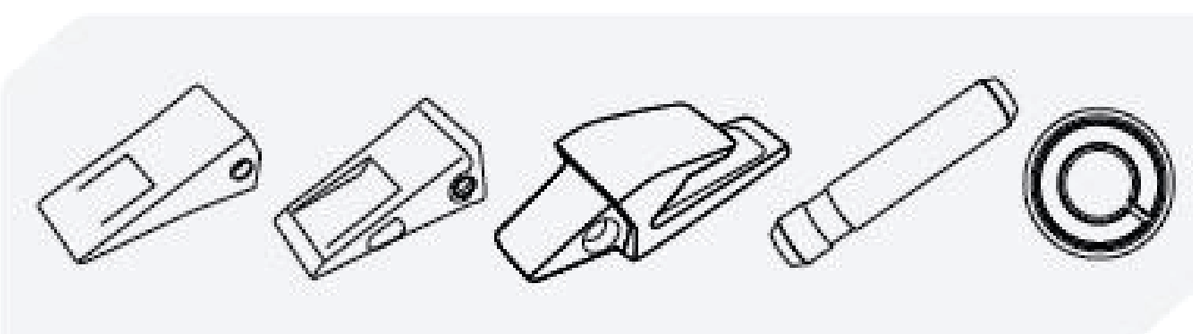

STANDARD

FCE161-3027
FCE262-3046

A (mm)	B (mm)	C (mm)	D (mm)	Weight (kg)	Pin	Retainer
100	87	216	90	4	8E6358	2114-1848A
118	107	253	93	7	2705-9010	2114-1848A

STANDARD

FC61N8-31310
FC61NB-31310

A (mm)	B (mm)	C (mm)	D (mm)	Weight (kg)	Pin	Retainer
115	121	261	97	10	2705-9010	2114-1848A
136	142	343	131	22	8E0468	8E0468

Weld-Brau

Volvo Style

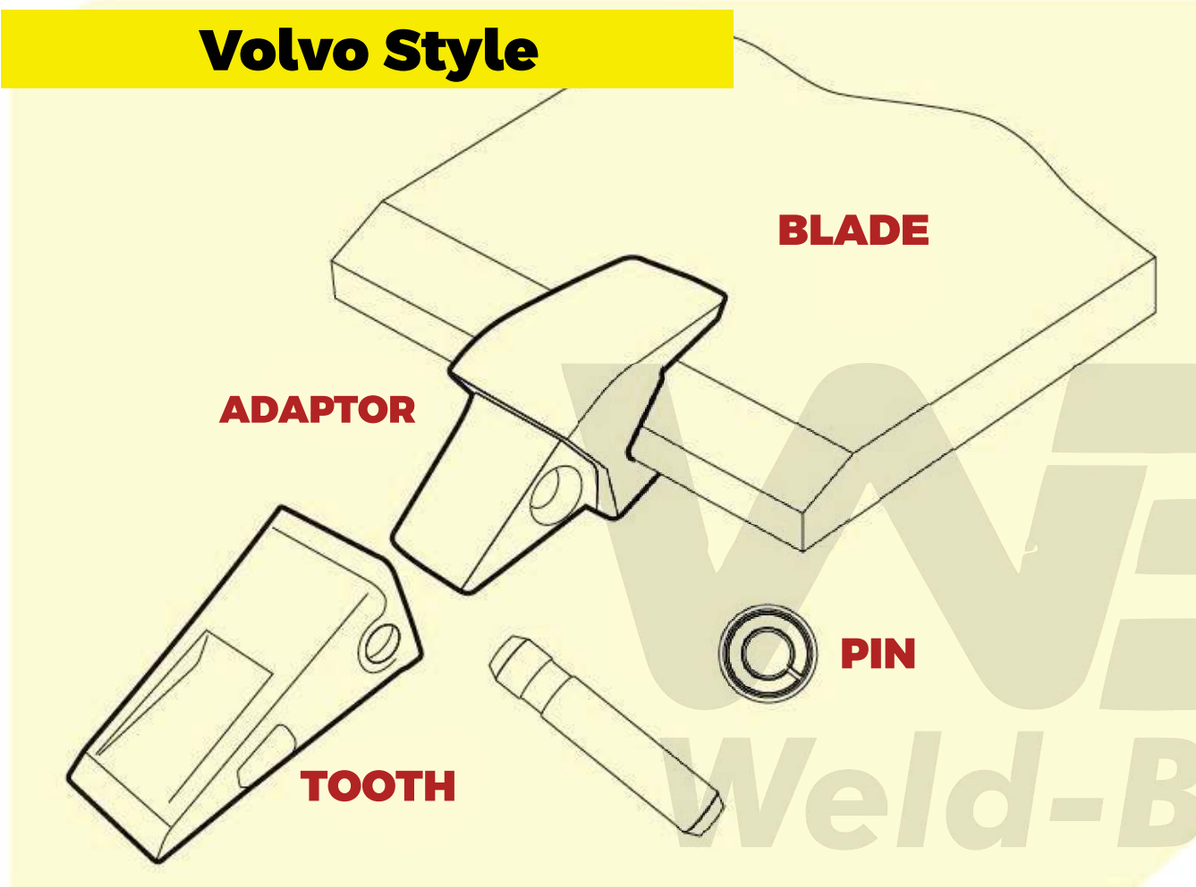

Volvo style bucket teeth ensure ease of installation and better performance while working. Design incorporates a horizontal 2 piece pin installation.

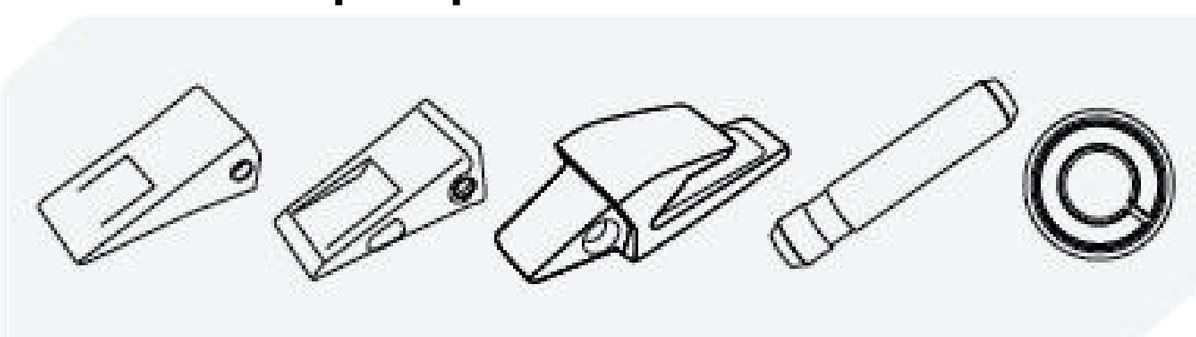

ADAPTERS

FHE161-3017
FC61N6-31320

A (mm)	B (mm)	C (mm)	Weight (kg)	Series
62	104	184	7.7	R200
	150	215	9.6	R290

FASTENERS

A (mm)	B (mm)	C (mm)	Series	Pin	Retainer
19	108	34	E161-3027	FHBE6358C	FH2114-1848AD
19	116	34	E262-3046	FH2705-9010D	FH2114-1848AD
19	116	34	61N8-31310	FH2705-9010D	FH2114-1848AD
23	134	43	61N8-31310	FH8E0468C	FH8E0469C

Weld-Brau

Volvo Style

Weld-Brau

STANDARD FCEC140 (Retainer 2114-1848A)

A (mm)	B (mm)	C (mm)	Weight (kg)	Series	Pin
82	93	21.7	4.1	Ec140	8E6358

STANDARD FC1171(00480,00371,01910) LFV460

A (mm)	B (mm)	C (mm)	Weight (kg)	Series	Pin	Retainer
83	99	220	4.1			
94	113	255	8	EC290	FH8E6358C	FH2114-1848D
131	131	262	12.2		FH1171-01920	FH1171-01930
144	155	315	15.4	EC460		

FASTENERS

A (mm)	B (mm)	C (mm)	Pin	
19	108	34	FH8E6358C	FH2114-1848AD
			FH11171-01920	FH1171-01930

ADAPTERS

A (mm)	B (mm)	C (mm)	Weight (kg)	Series	
55	111	177	6	VOLVO	FC1171-00470/325
				VOLVO	FC1171-01620

H&L Style

STANDARD

Two strap Adapter (834-23)
Inverted two strap Adapter (2740-23)
FCH23L
FCH24L
FCH25L

A (mm)	B (mm)	C (mm)	Weight (kg)	Series	Pin
54	63	142	1.2	23	H23-PN
60	75	184	1.9	24	H24-PN
				25	H25-PN

Suitable for smaller machinery, H&L tooth systems use a one piece horizontal metal pin with a strip of rubber through the middle. The rubber works to reduce vibration and enhance flexibility. These teeth offer outstanding performance and durability.

TWIN TIGER

Two strap Adapter (834-24)
Inverted two strap Adapter (2740-23)
FCH23-WTL

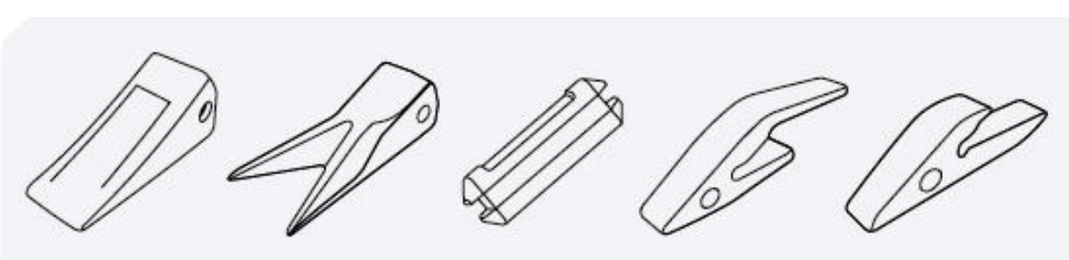

A (mm)	B (mm)	C (mm)	Weight (kg)	Series	Pin
54	63	142	1.1	23	H23-PN

Weld-Brau

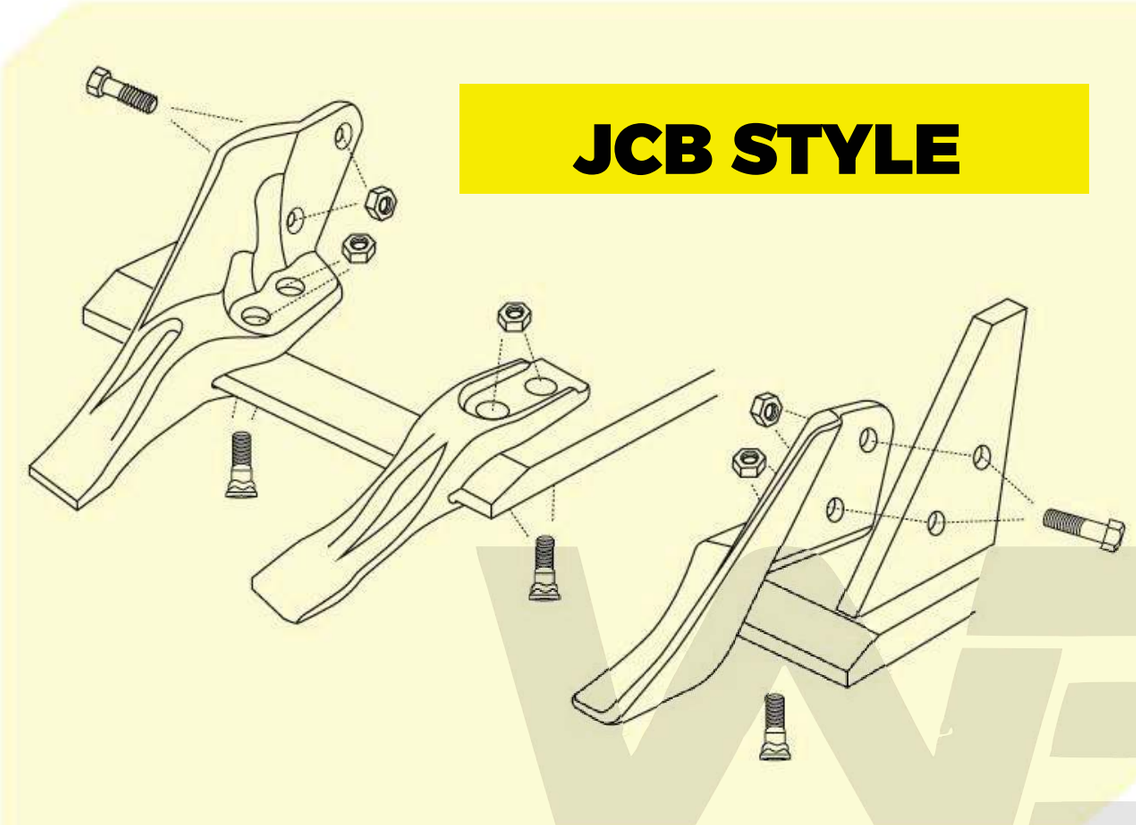

Hardware
Bolt Nut Washer

JCB style teeth for backhoe machines are bolted on to the machine. Suited generally only to JCB backhoe loaders, they will work in virtually any environment and get the job done.

Weld-Brau

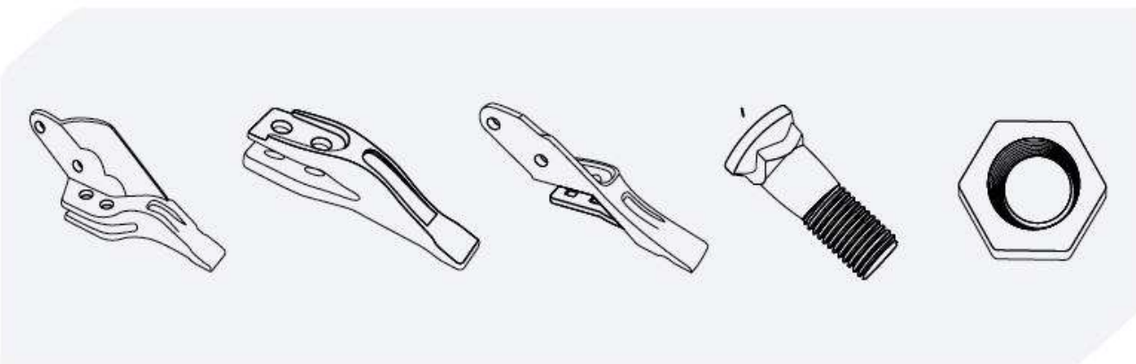

	A (mm)	B (mm)	C (mm)	D (mm)	Ø (mm)	Weight (kg)	Series
(L)	87.5	57	44.5	21	20.5	5.25	3CX
(C)	245	57	44.5	21	20.5	2.5	3CX
(R)	87.5	57	44.5	21	20.5	5.25	3CX

HENSLEY STYLE

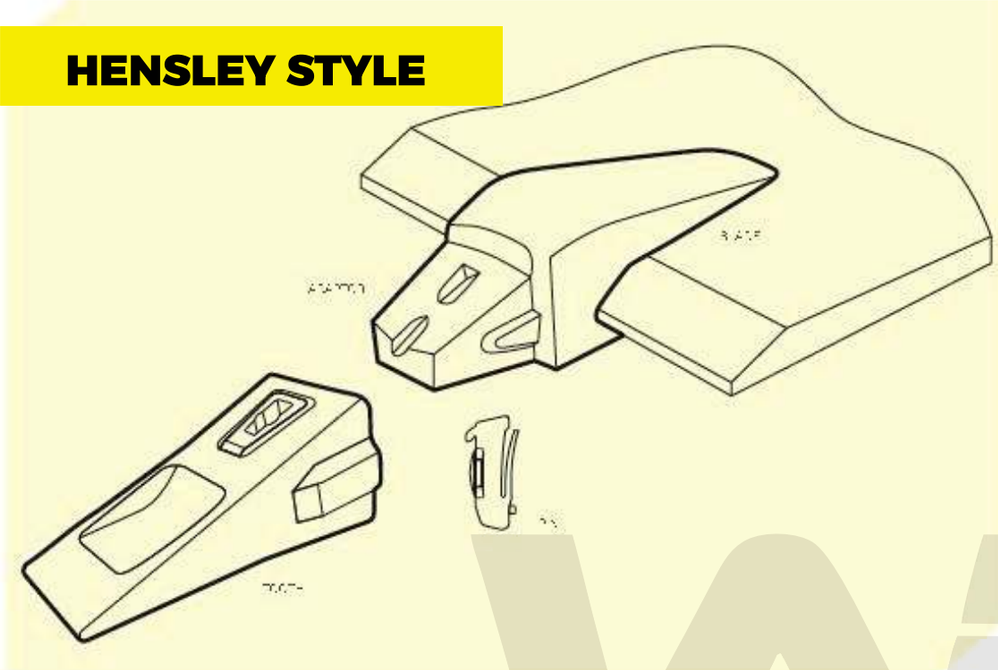

A (mm)	B (mm)	Fasteners	Series
54	19	FHH23-PN	23
58	22.5	FHH24-PN	24
70	22.5	FHH25-PN	25

EXCAVATOR ADAPTER

Best known for its unique parabolic design, Hensley bucket teeth incorporates a vertical one piece pin. The curved-in design of the tooth matches the shaped extension of the adaptor to ensure a locking fit. Hensley teeth improve digging performance by absorbing impact loads and is easily installed onsite.

Weld-Braw

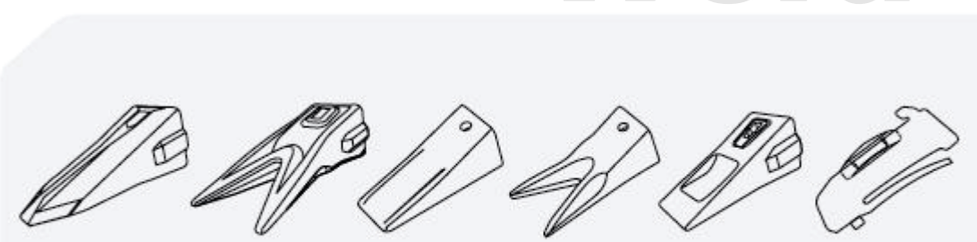

Top Strap (FC2740-23-25)

A (mm)	B (mm)	Weight (kg)	Teeth	Series	Pin
193	23	1.7	H23L - FCH23-WTL	23	FHH23-PN

Bottom Strap (FC834-23)

A (mm)	B (mm)	Weight (kg)	Teeth	Series	Pin
193	23	1.7	H23L - FCH23-WTL	23	FHH23-PN

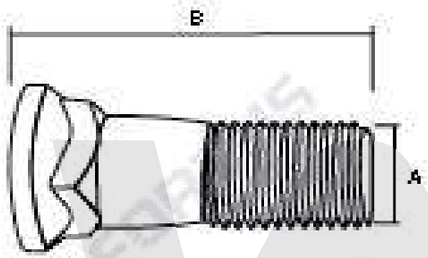

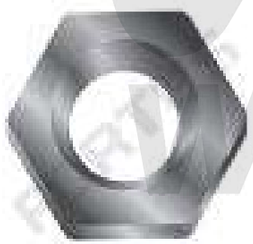

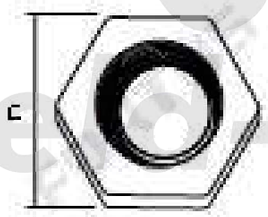

Weber-Brau

UNIVERSAL BOLT ON - TYPE 1

A (mm)	B (mm)	C (mm)	Weight (kg)	Hole
180	48	40	0.9	13

UNIVERSAL BOLT ON - TYPE 2

A (mm)	B (mm)	C (mm)	Weight (kg)	Hole
225	58	55-60	1.65	18

(”)		(mm)	
A	B	C	Series
3/4	23/4	28	3CX

Pb34234
Pn34

J SERIES
Rock Chisel

A (mm)	B (mm)	C (mm)	D (mm)	Weight (kg)	Series	Pin	Lock
					J200	FH8E6208C	FH8E6209C
					J225	FH6Y3228C	FH8E6259C
					J250	FH8E6258C	FH8E6259C
85	101	150	30	5.18	J300	FH9J2308C	FH8E6259C
95	105	280	35	7.9	J350	FH8E6358C	FH8E6359C
110	127	300	45	11	J400	FH7T3408C	FH8E8409C
		USE J460 TIPS			J450	FH6Y2527C	FH8E6359C
130	142	350	48	14.3	J460	FH8E0468C	FH8E0469C
150	150	390	50	23.3	J550	FH6Y8558C	FH8E4743C
190	160	480	75	39.5	J600	FH6I6608C	FH6I6609C
					J700	FH4T4708C	FH4T4707C

J SERIES FASTENERS

A (mm)	B (mm)	C (mm)	Series	Pin	Retainer
11	61	22	J200	FH8E6208C	FH8E6209C
14	69	30	J225	FH6Y3228C	FH8E6259C
14	78	30	J250	FH8E6258C	FH8E6259C
14	92	30	J300	FH9J2308C	FH8E6259C
19	108	40	J350	FH8E6358C	FH8E6359C
22	119	42	J400	FH7T3408C	FH8E8409C
19	134	40	J450	FH6Y2527C	FH8E6359C
24	134	44	J460	FH8E0468C	FH8E0469C
25	162	53	J550	FH6Y8558C	FH8E4743C
30	195	59	J600	FH6I6608C	FH6I6609C
32	200	70	J700	FH4T4708C	FH4T4707C

Weld-Bru

J SERIES
Twin Tiger

OEM Part No.	A (mm)	B (mm)	C (mm)	D (mm)	Weight (kg)	Series	Pin	Lock
135-8208	55	58	155	75	1.3	J200	FH8E6208C	FH8E6209C
135-8228	71	78	199	89	2.3	J225	FH6Y3228C	FH8E6259C
135-8258	79	90.5	215	90	2.6	J250	FH8E6258C	FH8E6259C
135-9308	85	104	242	105	4.4	J300	FH9J2308C	FH8E6259C
135-9357	100	108	287	122	6.2	J350	FH8E6358C	FH8E6359C
135-9408	115	129	320	141	11	J400	FH7T3408C	FH8E8409C
		USE J460 TIPS				J450	FH6Y2527C	FH8E6359C
138-6458	133	134	354	158	13.4	J460	FH8E0468C	FH8E0469C
138-6558	154	148	377	183	16.6	J550	FH6Y8558C	FH8E4743C
135-9608	196	185	462	235	37	J600	FH6I6608C	FH6I6609C

J SERIES
Weld-on flush mount adapters

(mm) A	B	C	D	Blade Thickness	Weight (kg)	Centre	Right	Left	Cnr	Machine Models	Series
47	232	340	22°	19-32	5.6	FC1U1254C	N/A	N/A	N/A	935, 951, 943, 941, 936, 930, 926, 920, 916, IT28, IT18	J250
56	235	355	22°	25-38		FC1U1304C	N/A	N/A	N/A	966C, 963, 955, 950, 944	J300
65	285	425	22°	32-45	8	FC1U1354C	FC1U1355C	FC1U1356C	N/A	980, 977, 973, 966D	J350
85	320	472	22°	45-51	14.9	FC8E0464C	FC8E0465C	FC8E0466C	N/A	988, 983, 980, 973, 966D	J460
108	290	472	23°	51-64	36.1	FC7J9554C	FC7J9555C	FC7J9556C	N/A	988, 992B, 992C	J550
N/A	N/A	N/A	35°	70	N/A	FC1199604C	N/A	N/A	FC1199605C	992C, 992G, 992K, 993K	J600

J SERIES
Standard

OEM Part No.	A (mm)	B (mm)	C (mm)	Weight (kg)	Series	Pin	Lock
9N-4252	76	93	202	3.9	J250	FH8E6258C	FH8E6259C
9N-4302	91	105	221	5.9	J300	FH9J2308C	FH8E6259C
9N-4352	100	117	255	8.8	J350	FH8E6358C	FH8E6359C
8E-4402	119	130	278	12	J400	FH7T3408C	FH8E8409C
	USE J460 TIPS				J450	FH6Y2527C	FH8E6359C
9N-4452	134	141	316	16.37	J460	FH8E0468C	FH8E0469C
9N-4552	159	160	370	24.6	J550	FH6Y8558C	FH8E4743C
7Y-0602	195	189	410	40.8	J600	FH6I6608C	FH6I6609C
9U-9702					J700	FH4T4708C	FH4T4707C

J SERIES
Heavy Duty

OEM Part No.	A (mm)	B (mm)	C (mm)	Weight (kg)	Series	Pin	Lock
1U-3202	61	64	145	J200	J200	FH8E6208C	FH8E6209C
6Y-3222	61	74	168	J225	J225	FH6Y3228C	FH8E6259C
1U-3252	73	89	198	J250	J250	FH8E6258C	FH8E6259C
1U-3302	84	100	215	J300	J300	FH9J2308C	FH8E6259C
1U-3352	100	108	240	J350	J350	FH8E6358C	FH8E6359C
7T-3402	116	124	263	J400	J400	FH7T3408C	FH8E8409C
	USE J460 TIPS				J450	FH6Y2527C	FH8E6359C
9W-8452	124	130	293	12.3	J460	FH8E0468C	FH8E0469C
9W-8552	146	148	338	19	J550	FH6Y8558C	FH8E4743C
6I-6602	180	190	410	30.4	J600	FH6I6608C	FH6I6609C
4T-4702	180	200	415	37.3	J700	FH4T4708C	FH4T4707C

J SERIES
Heavy Duty Abrasion

OEM Part No.	A (mm)	B (mm)	C (mm)	D (mm)	Weight (kg)	Series	Pin	Lock
9N-4253	75	86	194	83	4.6	J250	FH8E6258C	FH8E6259C
9N-4303	84	102	226	107	7.68	J300	FH9J2308C	FH8E6259C
9N-4353	102	115	254	122	11.8	J350	FH8E6358C	FH8E6359C
7T-3403						J400	FH7T3408C	FH8E8409C
	USE J460 TIPS					J450	FH6Y2527C	FH8E6359C
9N-4453	133	142	310	166	21.8	J460	FH8E0468C	FH8E0469C
6Y-2553	160	160	346	190	31.2	J550	FH6Y8558C	FH8E4743C
6I-6603	197	205	413	228	55.6	J600	FH6I6608C	FH6I6609C
4T-4703						J700	FH4T4708C	FH4T4707C

J SERIES
Penetration

Fortus Part No.	OEM Part No.	A (mm)	B (mm)	C (mm)	D (mm)	Weight (kg)	Series	Pin	Lock
FC9W8452PTC	9W-8452PT	130	145	358	70	20	J460	FH8E0468C	FH8E0469C
FC6I6602RP2C	-	198	192	450	100	49.7	J600	FH616608C	FH616609C
FC4T4702RP2C	-	213	213	492	108	65	J700	FH4T4708C	FH4T4707C

Weld-Brau

WEAR PROTECTION

- HEEL BLOCKS
- SHROUDS
- GROUSER BARS
- SIDE CUTTERS
- CHOCKY BARS
- WEAR BUTTONS
- WEAR PLATES
- WEAR STRIPS

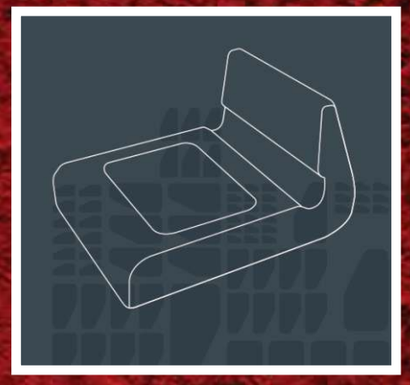

Wear Protection

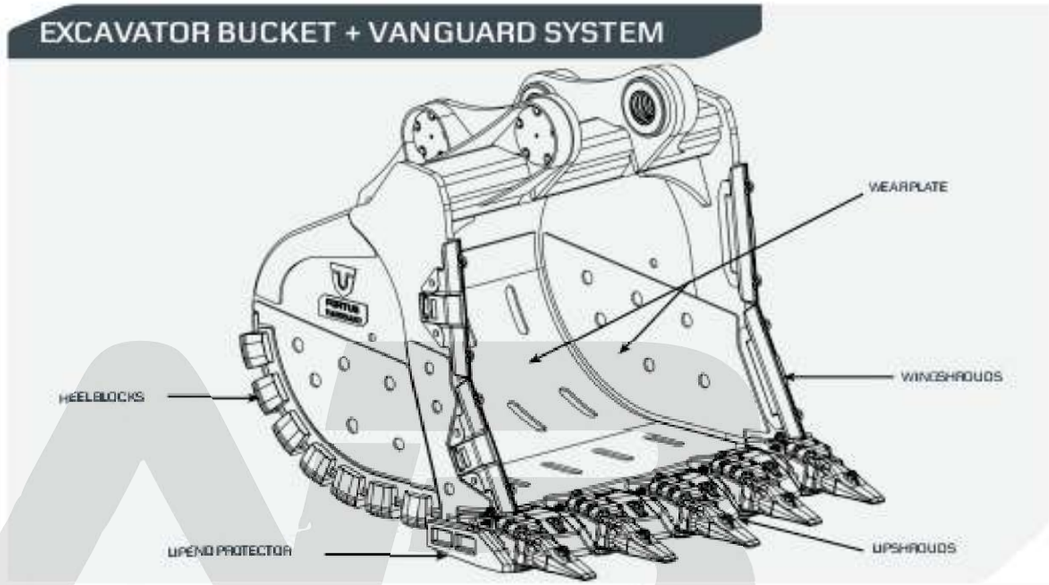

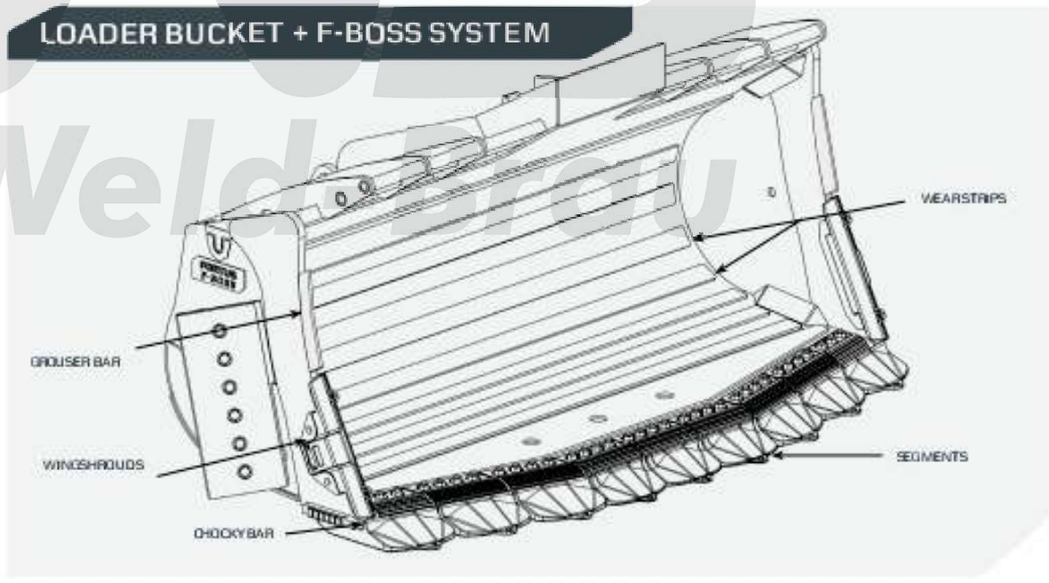

Wear protection plays an important role in protecting the most important parts of a machines bucket. Guaranteed protection in the toughest conditions. All wear protection is available in light duty through to heavy duty.

HEEL BLOCKS

Weld-Brau

Type 1						Weight (kg)
A (mm)	B (mm)	C (mm)	D (mm)	E (mm)	F (mm)	
175	140	175	135	30	110	10.5
230	190	230	185	35	130	20

OEM Part No.	Type 2						Weight (kg)
	A (mm)	B (mm)	C (mm)	D (mm)	E (mm)	F (mm)	
ES6697-2	250	188	150	200	50	166	21
ES6697-3	200	188	100	150	38	178	13
ES6697-4	175	188	150	135	32	178	16
ES6697-5	300	250	200	235	50	220	40
ES6697-7	355	250	244	235	100	235	82

Type 3						Weight (kg)
A (mm)	B (mm)	C (mm)	D (mm)	E (mm)	F (mm)	
140	140	140	120	35	120	5.8

OEM Part No.	Type 4						Weight (kg)
	A (mm)	B (mm)	C (mm)	D (mm)	E (mm)	F (mm)	
1386551M-205	220	200	170	190	30	130	18.5

Type 5						Weight (kg)
A (mm)	B (mm)	C (mm)	D (mm)	E (mm)	F (mm)	
262	190	195	190	82.7	169	33

LIP SHROUDS

Weld-Brau

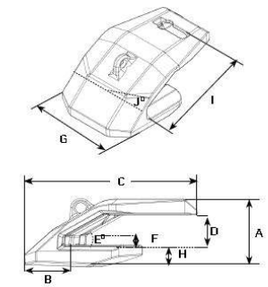

LIP SHROUDS - 90MM

Type	A(mm)	B(mm)	C(mm)	D(mm)	E(deg)	F(mm)	G(mm)	H(mm)	I(mm)	J(deg)	Boss/ Pin	Weight
Ctr	199	127	486	91	30	23	320	60	272	/	FAB/ FAP	72
Left	200	131	508	91	30	23	320	62	272	14	FAB/ FAP	70
Right	200	131	508	91	30	23	320	62	272	14	FAB/ FAP	70

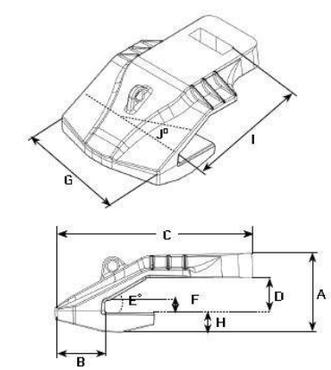

LIP SHROUDS - 100MM

Size Lip	D (mm)	A (deg)	P (mm)	Length (mm)	Weight (kg)
30-50mm	93	26°	12	800	48
50-80mm	66	25°	27	800	58
70-100mm	86	32°	44	800	103

Part No.	Type	A(mm)	B(mm)	C(mm)	D(mm)	E(deg)	F(mm)	G(mm)	H(mm)	I(mm)	J(deg)	Boss/ Pin	Weight
FELB100X410-3	Ctr	233	144	585	101	30	26	410	60	360	/	FBB/ FBP	111
FELB100X410-4L	Left	229	142	589	101	30	26	410	65	360	10	FBB/ FBP	110
FELB100X410-4R	Right	229	142	589	101	30	26	410	65	360	10	FBB/ FBP	110

LIP SHROUDS - 120MM

Type	A(mm)	B(mm)	C(mm)	D(mm)	E(deg)	F(mm)	G(mm)	H(mm)	I(mm)	J(deg)	Boss/ Pin	Weight
Ctr	247	164	607	121	30	41	440	62	358	/	FBB/ FBP	121
Left	242	163	611	121	30	41	440	63	358	11.5	FBB/ FBP	120
Right	242	163	611	121	30	41	440	63	358	11.5	FBB/ FBP	120

LIP SHROUDS - 140MM

Type	A(mm)	B(mm)	C(mm)	D(mm)	E(deg)	F(mm)	G(mm)	H(mm)	I(mm)	J(deg)	Boss/ Pin	Weight
Ctr	269	172	685	141	30	46	420	60	415	/	FBB/ FBP	145
Left	268	173	690	141	30	46	420	61	415	11.5	FBB/ FBP	147
Right	268	173	690	141	30	46	420	61	415	11.5	FBB/ FBP	147

Weld-Braun

LIP SHROUDS - 120MM

Type	A(mm)	B(mm)	C(mm)	D(mm)	E(deg)	F(mm)	G(mm)	H(mm)	I(mm)	J(deg)	Boss/ Pin	Weight
Ctr	247	164	607	121	30	41	440	62	358	/	FBB/ FBP	121
Left	242	163	611	121	30	41	440	63	358	11.5	FBB/ FBP	120
Right	242	163	611	121	30	41	440	63	358	11.5	FBB/ FBP	120

LIP SHROUDS - 140MM

Type	A(mm)	B(mm)	C(mm)	D(mm)	E(deg)	F(mm)	G(mm)	H(mm)	I(mm)	J(deg)	Boss/ Pin	Weight
Ctr	295	201	716	141	30	46	490	80	415	/	FBB/ FBP	202
Left	295	198	720	141	30	46	490	79	415	11.5	FBB/ FBP	205
Right	295	198	720	141	30	46	490	79	415	11.5	FBB/ FBP	205

SIDE CUTTERS

STOCK CODE	No. Holes	Weight (Kg)	Type	Machine size (Ton)	LH/RH	Original Design By
FCE72959	2	5	Type 1	20	Both	Esco
FC3-6SCR	3	1.6	Type 2	3-6	R	ECH
R500LH	3	2.8	Type 3		L	Hyundai
R500RH	3	2.8	Type 3		R	Hyundai
FCZX70SCL	3	7.6	Type 4	7	L	Hitachi
FCZX70SCR	3	7.6	Type 4	7	R	Hitachi
FC7Y0357	3	19	Type 5	30		Cat
FC7Y0358	3	19	Type 5	30		Cat
FCE72958L	4	9	Type 6	30-40	L	Esco
FCE72958R	4	9	Type 6	30-40	R	Esco
FCMX8SCL	5	12	Type 7	25	L	Hyundai
FCMX8SCR	5	12	Type 7	25	R	Hyundai
EX200L	6	13.7	Type 8	20	L	Hitachi
EX200R	6	13.7	Type 8	20	R	Hitachi
EX300L	6	18.3	Type 9	30	L	Hitachi
EX300R	6	18.3	Type 9	30	R	Hitachi

CHOCKY BARS

(A) mm	(B) mm	(C) mm	(D) mm	(E) mm	Weight (kg)
240	25	15	8	23	0.9
240	40	15	8	23	1.5
240	50	15	8	23	2
240	65	15	8	23	2.7
240	90	15	8	23	3.6
240	100	15	8	23	4.2
240	130	15	8	23	5.7

Weld-Brau

WEAR BUTTONS

Weld-Brau

(A) mm	(B) mm	(C) mm	(D) mm	Weight (kg)
60	40	20	9.5	1
75	25	15.5	9.5	1
90	30	20.5	9.5	1
115	32	22.5	9.5	3
150	35	25	9.5	5

Weld-Brau

mojalefaphakisi@gmail.com

(+266) 62699479
(+266) 56116277

Contact us or visit our office to get access to our parts, pricing, inventory and complete your orders

HA-ABIA
PELA BIG HOUSE

CUTTING BLADES

- Universal blades
- Grader Blades
- Loader Blades
- Doser Blades
- Scraper Blades

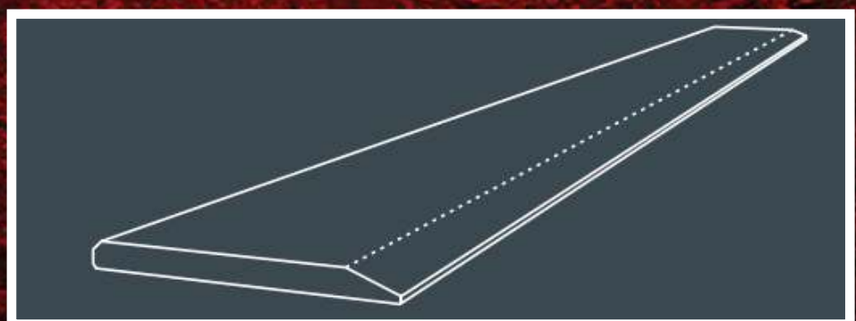

UNIVERSAL BLADES

ARROWHEAD

Arrowhead cutting blades are welded straight on to the bucket and apply extra protection to the bucket lip. Harder wearing, through hardened steel is used for harsher conditions.

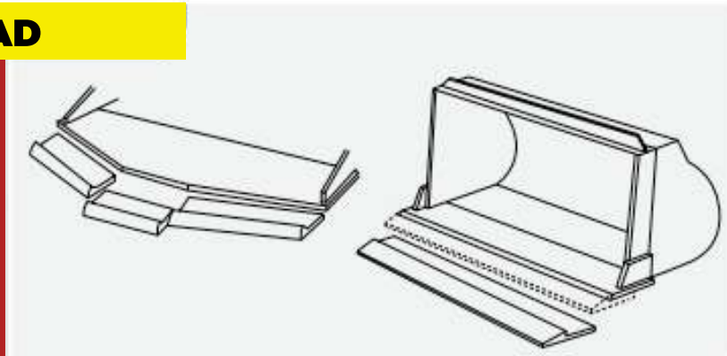

DOUBLE BEVEL

Precision cutting blades that are reverse edged to provide double the amount of wear protection. 6 inch hole centers.

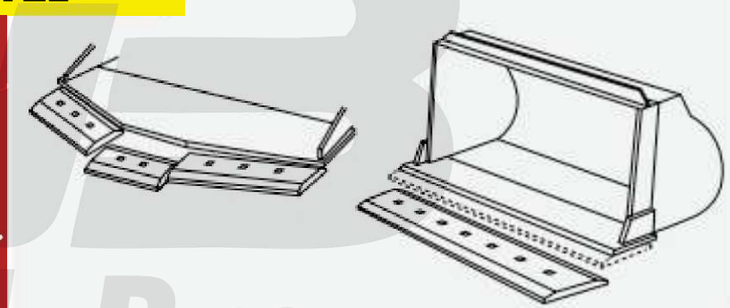

SINGLE BEVEL

Ideal for bucket lip replacement and produced with through hardened steel. Available as pre-drilled base edge.

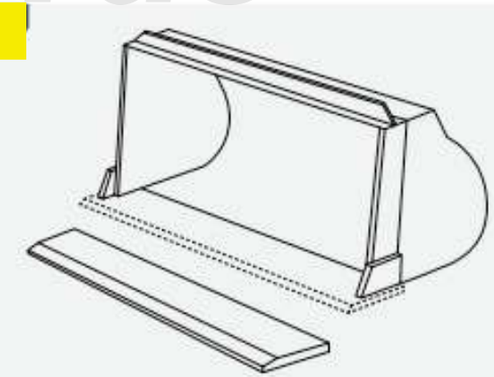

Weld-Brau

UNIVERSAL DOUBLE BEVEL Bolt-ob

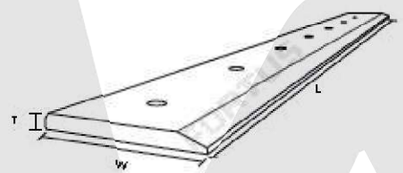

W(mm)	T(mm)	L(mm)	Weight (kg)	Hardware			Bolt Size (")	Bolt Qty
				Bolt	Nut	Washers		
152	16	1830	30.5	PB58214	PN58	PW58	5/8	12
152	16	2133	41.6	PB58214	PN58	PW58	5/8	14
152	16	2438	45	PB58214	PN58	PW58	5/8	16
152	19	2438	55.7	PB58212	PN58	PW58	5/8	16
203	16	1830	47.4	PB58214	PN58	PW58	5/8	12
203	19	2438	72	PB58212	PN58	PW58	5/8	16
203	19	3048	93	PB58212	PN58	PW58	5/8	20
203	19	2133	64	PB34212	PN34	PW34	3/4	14
203	19	2438	72	PB34212	PN34	PW34	3/4	16
203	19	3048	89.7	PB34212	PN34	PW34	3/4	20
203	25	3048	120	PB34234	PN34	PW34	3/4	20
254	25	3048	141.4	PB34318	PN34	PW34	3/4	20
254	25	3048	141	PB78312	PN78	PW78	7/8	20
254	25	3048	141	PB1312	PN10	PW10	1	20
330	32	3100	223.5	PB1312	PN10	PW10	1	20
254	25	2438	113.12	PB34212	PN34	PW34	3/4	16
254	19	2438	79	PB34212	PN34	PW34	3/4	16

UNIVERSAL SINGLE BEVEL WELD-ON

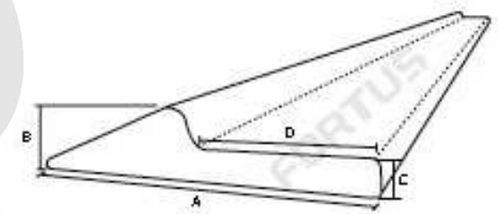

W (mm)	T (mm)	L (mm)	Weight (kg)
110	12	1830	19.3
110	16	1830	23.9
150	16	1900	36
150	16	2440	46
150	20	1830	39.7
150	20	2100	45.5
150	20	2440	58.6
200	20	2440	78
200	20	3048	90.2
250	25	3048	152.4
300	30	3048	219.5
300	40	3048	270

Weld-Brau

UNIVERSAL Pre-Drilled

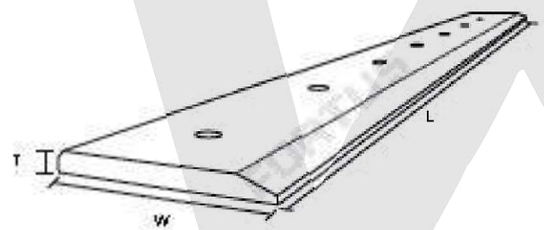

W (mm)	T (mm)	L (mm)	Weight (kg)
110	12	1830	19.3
110	16	1830	23.9
150	16	1900	36
150	16	2440	46
150	20	1830	39.7
150	20	2100	45.5
150	20	2440	58.6
200	20	2440	78
200	20	3048	90.2
250	25	3048	152.4
300	30	3048	219.5
300	40	3048	270

UNIVERSAL - ARROWHEAD

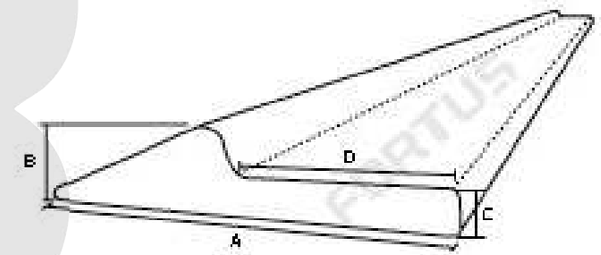

A (mm)	B (mm)	C (mm)	D (mm)	Length mm	Weight (kg)
101	20	10	46	1830	17
101	20	10	46	3048	28
151	32	16	68	3048	62
151	32	16	68	1830	38
203	32	19	127	3048	95
254	57	29	127	3048	200
254	70	40	127	3650	321

Weld-Brau

BULLDOZER BLADES - CAT Style

D11R, D11T, D11

SU BLADE

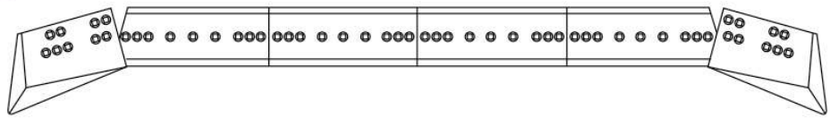

END BIT	T	W	406 X 1020	T	W	406 X 1098	T	W	406 X 1098	T	W	406 X 1020	T	W	END BIT	L	W
UT 8E-9785	60														UT 8E-9786	60	
GD FB8E4543C	60	155	GD FB9W2425C	45	130	FB9W2426C	45	148	FB9W2426C	45	148	FB9W2425C	45	130	GD FB8E4544C	60	155
EWL FC8E4545C		181	EWL FB9W4494C	60	173	FB9W4495C	60	193	FB9W4495C	60	193	FB9W4494C	60	173	EWL FC8E4546C		181
TCO FC8E4545C-TCO			TCO FB9W4494C-TCO			FB9W4495C-TCO			FB9W4495C-TCO			FB9W4494C-TCO			TCO FC8E4546C-TCO		
9	1-1/4" PB114418 PN114 PW114HD		9	1-1/4" PB114418 PN114 PW114HD		9	1-1/4" PB114418 PN114 PW114HD		9	1-1/4" PB114418 PN114 PW114HD		9	1-1/4" PB114418 PN114 PW114HD		9	1-1/4" PB114418 PN114 PW114HD		

D10R, D10T

U BLADE

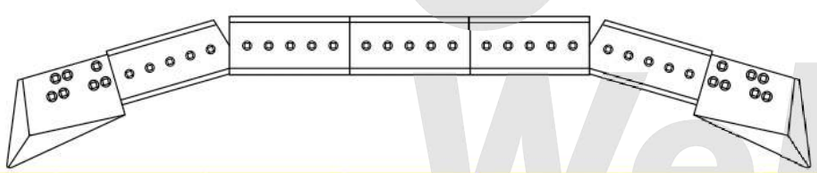

END BIT	T	W	406 X 859	T	W	406 X 848	T	W	406 X 848	T	W	406 X 848	T	W	406 X 859	T	W	END BIT	T	W
HC FB7T4689C	60	113																HC FB7T4688C	60	113
GD FB8E4199C	55	115	GD FB9W6608C	35	86	FB9W6615C	35	90	FB9W6615C	35	90	FB9W6615C	35	90	FB9W6608C	35	86	GD FB8E4198C	55	115
EWL FC8E4541C		119	EWL FB9W6657C	45	96	FB9W6658C	45	111	FB9W6658C	45	111	FB9W6658C	45	111	FB9W6657C	45	96	EWL FC8E4542C		119
UT FB1003133C	60		EEWL FB8E2086C	60	149	FB8E2087C	60	147	FB8E2087C	60	147	FB8E2087C	60	147	FB8E2086C	60	149	UT FB1003134C	60	
TCO FC8E4541C-TCO			TCO FB9W6657C-TCO			FB9W6658C-TCO			FB9W6658C-TCO			FB9W6658C-TCO			FB9W6657C-TCO			TCO FC8E4542C-TCO		
7	1-1/4" PB114418 PN114 PW114HD		5	1-1/4" PB114418 PN114 PW114HD		5	1-1/4" PB114418 PN114 PW114HD		5	1-1/4" PB114418 PN114 PW114HD		5	1-1/4" PB114418 PN114 PW114HD		5	1-1/4" PB114418 PN114 PW114HD		7	1-1/4" PB114418 PN114 PW114HD	

D10R, D10T

SU BLADE

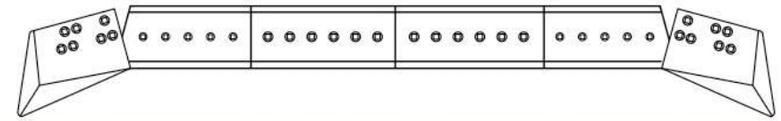

END BIT	T	W	406 X 859	T	W	406 X 992	T	W	406 X 992	T	W	406 X 859	T	W	END BIT	T	W
HC FB7T4689C	60	113													HC FB7T4688C	60	113
GD FB8E4199C	55	115	GD FB9W6608C	35	88	FB9W6609C	35	106	FB9W6609C	35	106	FB9W6608C	35	86	GD FB8E4198C	55	115
EWL FC8E4541C		119	EWL FB9W6657C	45	96	FB9W6656C	45	136	FB9W6656C	45	136	FB9W6657C	45	96	EWL FC8E4542C		119
UT FB1003133C	60	84	EEWL FB8E2086C	60	149	FB8E2085C	60	179	FB8E2085C	60	179	FB8E2086C	60	149	UT FB1003134C	60	84
TCO FC8E4541C-TCO			TCO FB9W6657C-TCO			FB9W6656C-TCO			FB9W6656C-TCO			FB9W6657C-TCO			TCO FC8E4542C-TCO		
7	1-1/4" PB114418 PN114 PW114		5	1-1/4" PB114418 PN114 PW114		6	1-1/4" PB114418 PN114 PW114		6	1-1/4" PB114418 PN114 PW114		5	1-1/4" PB114418 PN114 PW114		7	1-1/4" PB114418 PN114 PW114	

D11R, D11T, D11

U BLADE

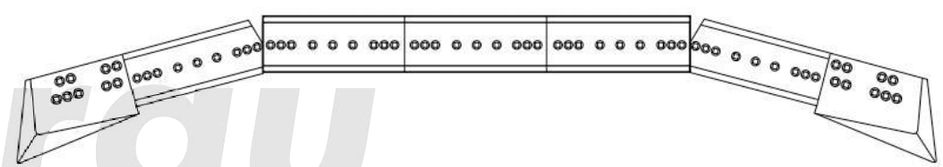

END BIT	T	W	406 X 1020	T	W	406 X 1023	T	W	406 X 1098	T	W	406 X 1023	T	W	406 X 1020	T	W	END BIT	T	W
GD FB8E4543C	60	155	GD FB9W2425C	45	130	FB9W2424C	45	148	FB9W2426C	45	148	FB9W2424C	45	148	FB9W2425C	45	130	GD FB8E4544C	60	155
EWL FC8E4545C		181	EWL FB9W4494C	60	173	FB9W4493C	60	173	FB9W4495C	60	193	FB9W4493C	60	179	FB9W4494C	60	173	EWL FC8E4546C		181
TCO FC8E4545C-TCO			TCO FB9W4494C-TCO			FB9W4493C-TCO			FB9W4495C-TCO			FB9W4493C-TCO			FB9W4494C-TCO			TCO FC8E4546C-TCO		
9	1-1/4" PB114418 PN114 PW114HD		9	1-1/4" PB114418 PN114 PW114HD		9	1-1/4" PB114418 PN114 PW114HD		9	1-1/4" PB114418 PN114 PW114HD		9	1-1/4" PB114418 PN114 PW114HD		9	1-1/4" PB114418 PN114 PW114HD		9	1-1/4" PB114418 PN114 PW114HD	

Weld-Brau

BULLDOZER BLADES - CAT Style

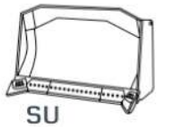

D9R, D9T, D9
SU BLADE

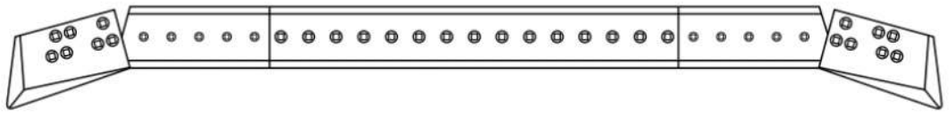

	END BIT	T	W		330 X 803	T	W	330 X 1787	T	W	330 X 803	T	W		END BIT	T	W
LC	FB6Y4277C	40	50	FD	FB6Y5540C	30	57	FB6Y5539C	30	128	FB6Y5540C	30	57	LC	FB6Y4278C	40	50
GD	FB8E4197C	50	80	GD	FB7T9125C	35	67	FB7T5702C	35	155	FB7T9125C	35	67	GD	FB8E4196C	50	80
EWL	FC8E4539C		80	EWL	FB9W3927C	45	88	FB9W7043C	45	201	FB9W3927C	45	88	EWL	FC8E4540C		80
	7	1" PB1312 PN10 PW10			5	1" PB1312 PN10 PW10		12	1" PB1312 PN10 PW10		5	1" PB1312 PN10 PW10			7	1" PB1312 PN10 PW10	

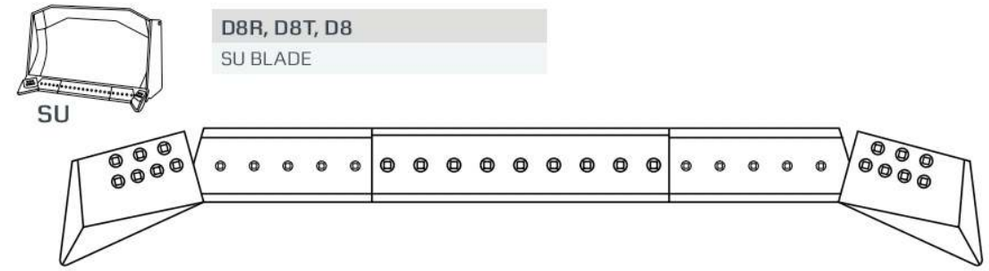

D8R, D8T, D8
SU BLADE

	END BIT	T	W		330 X 803	T	W	330 X 1353	T	W	330 X 803	T	W		END BIT	T	W
LC	FB6Y4277C	40	48	FD	FB6Y5540C	30	58	FB4T6381C	30	97	FB6Y5540C	30	58	LC	FB6Y4278C	40	48
UT	FB1003139C	45	58											UT	FB1003140C	45	58
GD	FB8E4193C	35	56	GD	FB7T9125C	35	67	FB7T9126C	35	116	FB7T9125C	35	67	GD	FB8E4194C	35	56
EWL	FC8E4537C		67	EWL	FB9W3927C	45	88	FB1122472C	45	152	FB9W3927C	45	88	EWL	FC8E4538C		67
	7	1" PB13 PN10 PW10			5	1" PB13 PN10 PW10		9	1" PB13 PN10 PW10		5	1" PB13 PN10 PW10			7	1" PB13 PN10 PW10	

D9R, D9T, D9
U BLADE

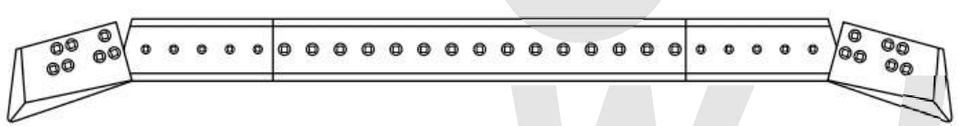

	END BIT	T	W		330 X 803	T	W	330 X 2265	T	W	330 X 803	T	W		END BIT	T	W
LC	FB6Y4277C	40	50	FD	FB6Y5540C	30	57	FB6Y5538C	30	162	FB6Y5540C	30	57	LC	FB6Y4278C	40	50
GD	FB8E4197C	50	80	GD	FB7T9125C	35	67	FB7T5701C	35	196	FB7T9125C	35	67	GD	FB8E4196C	50	80
EWL	FC8E4539C		80	EWL	FB9W3927C	45	88	FB9W7044C	45	255	FB9W3927C	45	88	EWL	FC8E4540C		80
	7	1" PB1312 PN10 PW10			5	1" PB1312 PN10 PW10		15	1" PB1312 PN10 PW10		5	1" PB1312 PN10 PW10			7	1" PB1312 PN10 PW10	

D8R, D8T
U BLADE

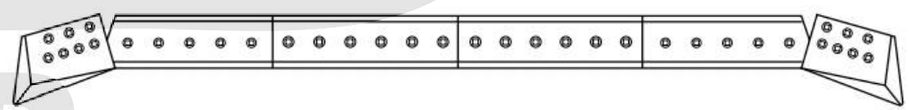

TYPE	END BIT	T	W		330 X 824	T	W	330 X 900	T	W	330 X 900	T	W	330 X 824	T	W		END BIT	T	W
LC	FB6Y4277C	40	48	FD	9W-5232	30	59	FB4T6378C	30	65	FB4T6378C	30	65	9W-5232	30	59	LC	FB6Y4278C	40	48
UT	FB1003139C	45	62														UT	FB1003140C	45	62
GD	FB8E4193C	35	56	GD	FB7T9127C	35	72	FB9W6092C	35	77	FB9W6092C	35	77	FB7T9127C	35	72	GD	FB8E4194C	35	56
EWL	FC8E4537C		67	EWL	FB1122473C	45	92	FB1122475C	45	100	FB1122475C	45	100	FB1122473C	45	92	EWL	FC8E4538C		67
	7	1" PB13 PN10 PW10			5	1" PB13 PN10 PW10		6	1" PB13 PN10 PW10		6	1" PB13 PN10 PW10		5	1" PB13 PN10 PW10			7	1" PB13 PN10 PW10	

Weld-Brau

BULLDOZER BLADES
KOMATSU STYLE

D7R, D7T, D7

SU BLADE

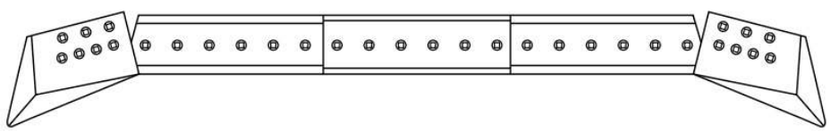

	END BIT	T	W		254 X 913	T	W	254 X 894	T	W	254 X 913	T	W		END BIT	T	W
				FD	1U-1192	20	33	4T-5318	30	101	1U-1192	20	33				
					280 X 874	T	W	280 X 894	T	W	280 X 874	T	W				
GD	FB9W6199C	35	50	GD	FB7T6936C	25	44	FB7T6678C	25	46	FB7T6936C	25	44	GD	FB9W6198C	35	50
				EWL	FB1073362C	35	66	FB1073363C	35	60	FB1073362C	35	66				
7	7/8" PB78234 PN78 PW78			6	7/8" PB78234 PN78 PW78			6	7/8" PB78234 PN78 PW78		6	7/8" PB78234 PN78 PW78		7	7/8" PB78234 PN78 PW78		

D6R, D6T, D6

SU BLADE

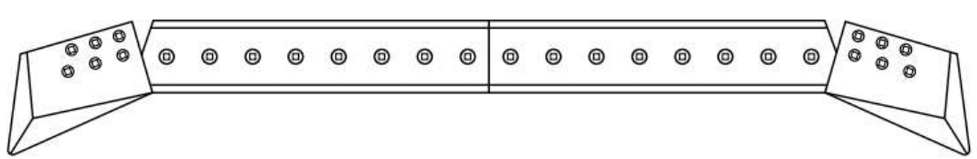

	END BIT	T	W		254 X 1227	T	W	254 X 1227	T	W		END BIT	T	W
LC	FB9W8874C	25	20	FD	FB9W1878C	20	44	FB9W1878C	20	44	LC	FB9W8875C	25	20
GD	FB6Y4411C	30	30								GD	FB6Y4410C	30	30
EWL	FB9W1875C	30	30	EWL	FB6Y3840C	25	58	FB6Y3840C	25	58	EWL	FB9W1876C	30	30
6	3/4" PB34212 PN34 PW34			8	3/4" PB34212 PN34 PW34			8	3/4" PB34212 PN34 PW34		6	3/4" PB34212 PN34 PW34		

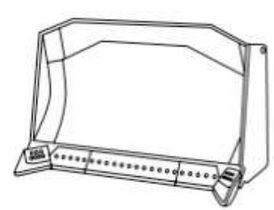

D475ASD-5EO

SUPER BLADE

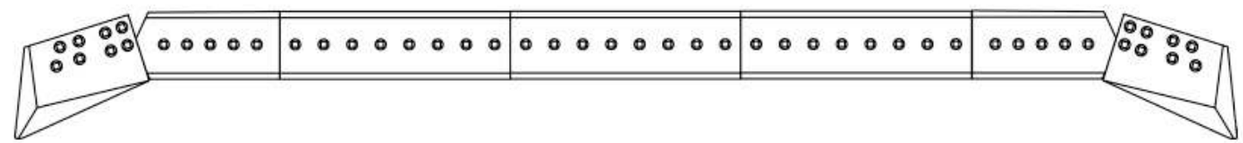

	END BIT	T	W	861x406	T	W	1187x406	T	W	1187x406	T	W	1187x406	T	W	861x406	T	W	END BIT	T	W
GD	FB198-71-31530K	60	130	FB198-71-31540K	45	110	FB198-71-31550K	45	161	FB198-71-31550K	45	161	FB198-71-31540K	45	110	FB198-71-31540K	45	161	FB198-71-31520K	60	130
HD	FC198-71-31530K		130	FB31540-60K	45	110	FB31550-60K	45	161	FB31550-60K	45	161	FB31540-60K	45	110	FB31540-60K	45	161	FC198-71-31520K		130
HD-TCO	FC198-71-31530K-TCO			FB31540-60K-TCO			FB31550-60K-TCO			FB31550-60K-TCO			FB31540-60K-TCO			FB31540-60K-TCO			FC198-71-31520K-TCO		
8	1-3/8" PB1386 PN138 PW138			5	1-3/8" PB138412 PN138 PW138		8	1-3/8" PB138412 PN138 PW138		8	1-3/8" PB138412 PN138 PW138		8	1-3/8" PB138412 PN138 PW138		5	1-3/8" PB138412 PN138 PW138		8	1-3/8" PB1386 PN138 PW138	

Weld-Brau

"Built to penetrate, welded to last"