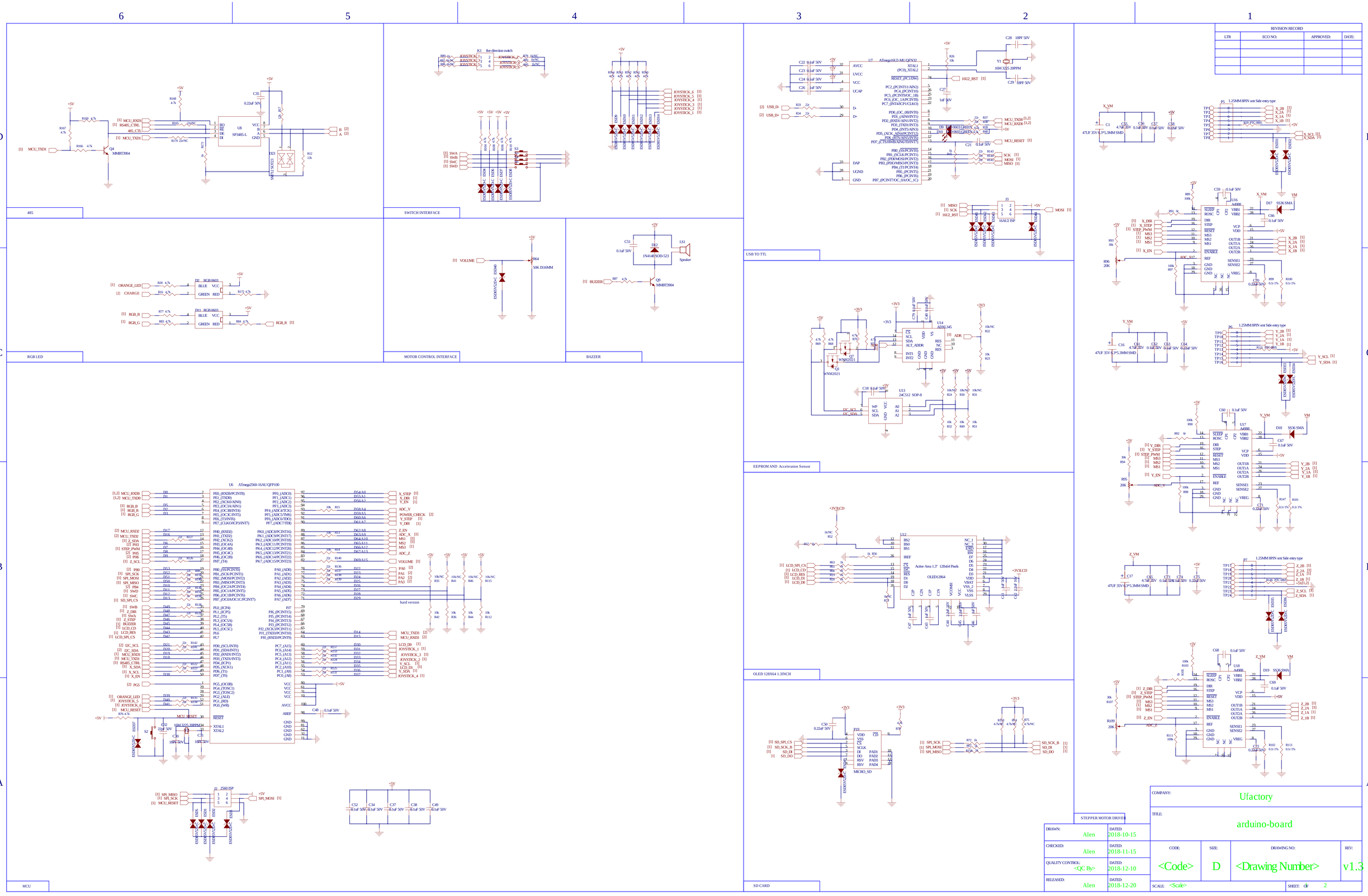
485
SWITCH INTERFACE
USB TO TTL
RGB LED
MOTOR CONTROL INTERFACE
BAZZER
EEPROM AND Acceleration Sensor
MCU
OLED 128X64 1.3INCH
SD CARD
STEPPER MOTOR DRIVER
U6 ATmega2560-16AU QFP100
U8 SP3485-L
U17 A4988
U18 A4988
U16 A4988
U12 Active Area 1.3" 128x64 Pixels OLED12864
U14 ADXL345
U13 24C512 SOP-8
MICRO_SD
J2 2560 ISP
J3 16AU2 ISP
hard version
REVISION RECORD
LTR
ECO NO:
APPROVED:
DATE:
DRAWN: Allen 2018-10-15
CHECKED: Allen 2018-11-15
QUALITY CONTROL: <QC By> 2018-12-10
RELEASED: Allen 2018-12-20
COMPANY: Ufactory
TITLE: arduino-board
CODE: <Code>
SIZE: D
DRAWING NO: <Drawing Number>
REV: v1.3
SCALE: <Scale>
SHEET: 2 OF 2

REVISION RECORD			
LTR	ECO NO:	APPROVED:	DATE:

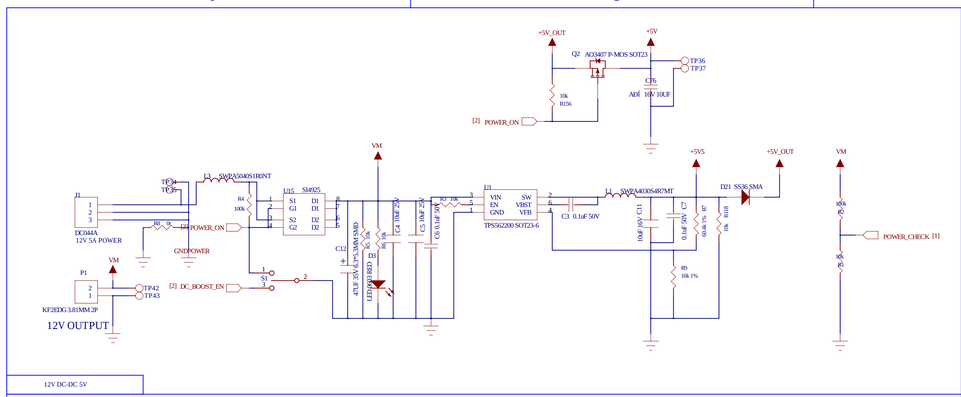

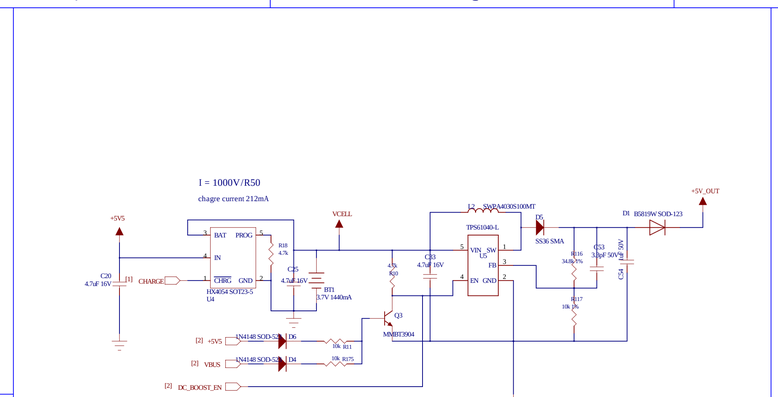

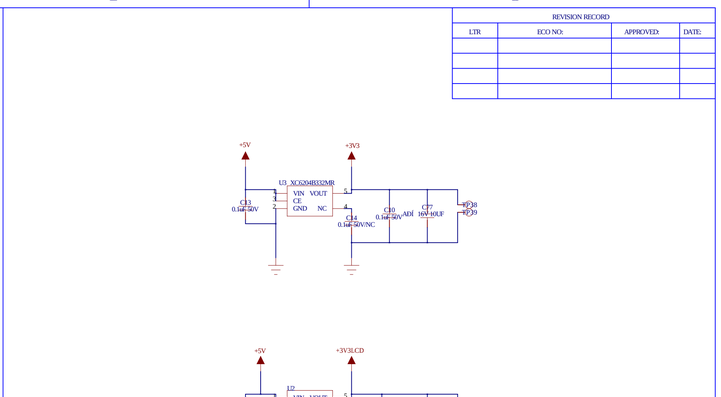

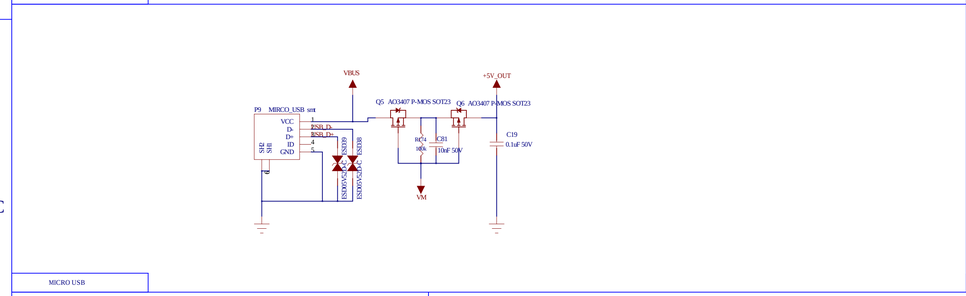

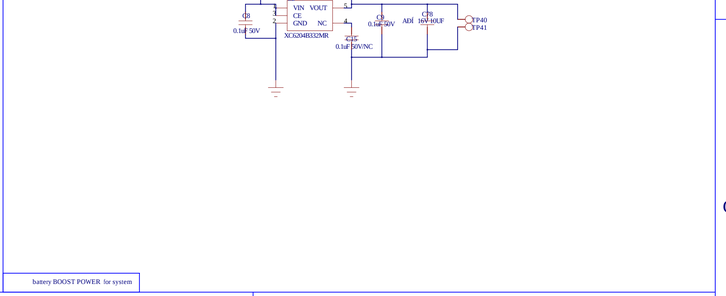

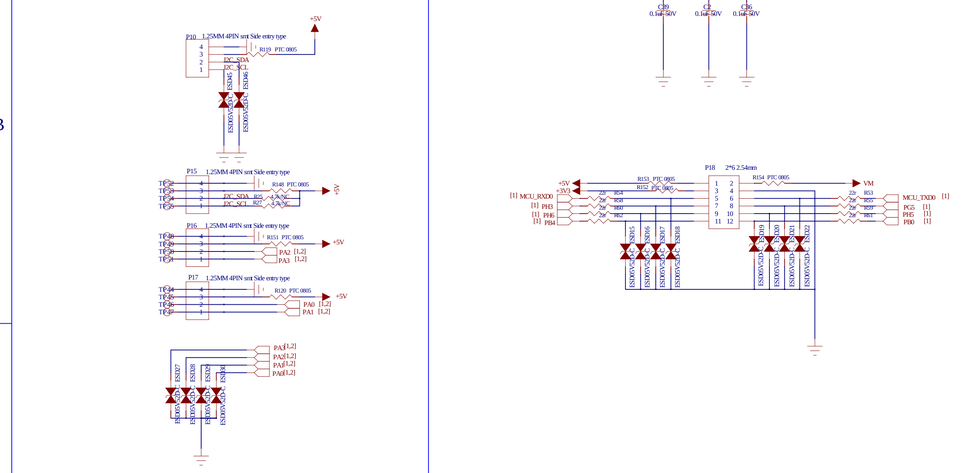

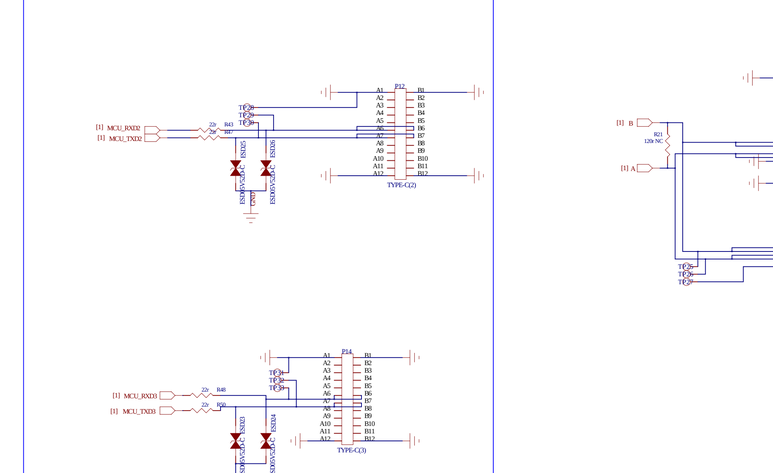

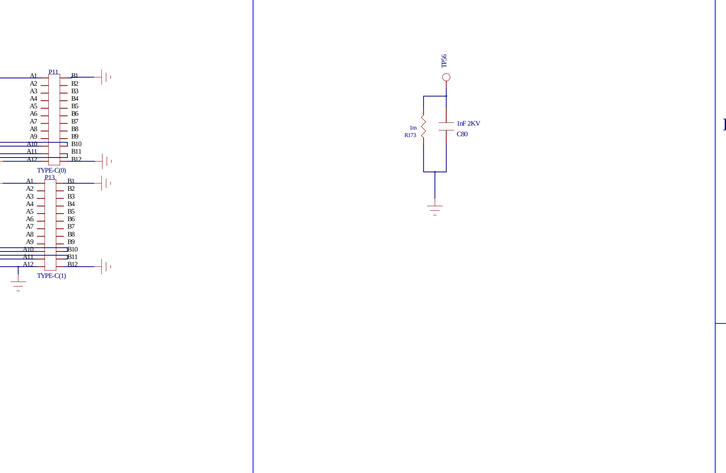

COMPANY: Ufactory			
TITLE: arduino-board			
DRAWN: Allen	DATED: 2018-10-15		
CHECKED: Allen	DATED: 2018-11-15		
QUALITY CONTROL: <QC By>	DATED: 2018-12-10		
RELEASED: Allen	DATED: 2018-12-20		
CODE: <Code>	SIZE: D	DRAWING NO: <Drawing Number>	REV: v1.3
SCALE: <Scale>		SHEET: 2	

12V DC-DC 5V

MICRO USB

USER INTERFACE

USER INTERFACE

TYPEC FOR UART TTL

TPYEC FOR 485

battery BOOST POWER for system

battery BOOST POWER for system