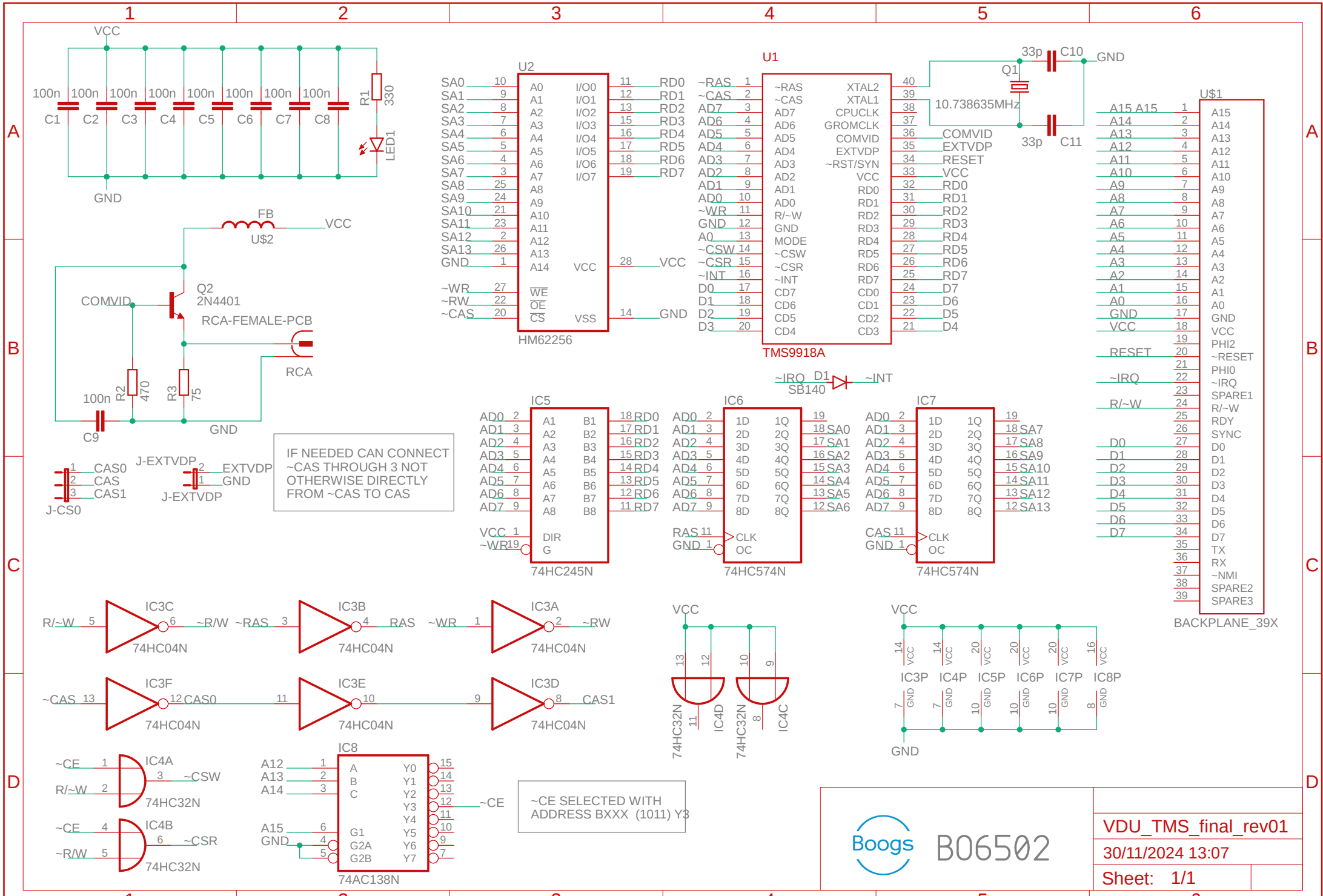
VCC
100n C1
100n C2
100n C3
100n C4
100n C5
100n C6
100n C7
100n C8
R1 330
LED1
GND
FB
U$2
VCC
Q2
2N4401
COMVID
RCA-FEMALE-PCB
RCA
R2 470
R3 75
100n C9
GND
J-CS0
CAS0
CAS
CAS1
J-EXTVDP
EXTVDP
GND
J-EXTVDP
IF NEEDED CAN CONNECT
~CAS THROUGH 3 NOT
OTHERWISE DIRECTLY
FROM ~CAS TO CAS
U2
HM62256
SA0 SA1 SA2 SA3 SA4 SA5 SA6 SA7 SA8 SA9 SA10 SA11 SA12 SA13 GND
~WR ~RW ~CAS
A0 A1 A2 A3 A4 A5 A6 A7 A8 A9 A10 A11 A12 A13 A14
WE OE CS
I/O0 I/O1 I/O2 I/O3 I/O4 I/O5 I/O6 I/O7
VCC VSS
RD0 RD1 RD2 RD3 RD4 RD5 RD6 RD7
VCC
GND
U1
TMS9918A
~RAS ~CAS AD7 AD6 AD5 AD4 AD3 AD2 AD1 AD0 R/~W GND MODE ~CSW ~CSR ~INT CD7 CD6 CD5 CD4
XTAL2 XTAL1 CPUCLK GROMCLK COMVID EXTVDP ~RST/SYN VCC RD0 RD1 RD2 RD3 RD4 RD5 RD6 RD7 CD0 CD1 CD2 CD3
33p C10
GND
Q1
10.738635MHz
33p C11
COMVID
EXTVDP
RESET
VCC
RD0 RD1 RD2 RD3 RD4 RD5 RD6 RD7
D7 D6 D5 D4
~IRQ D1 SB140 ~INT
IC5
74HC245N
A1 A2 A3 A4 A5 A6 A7 A8
B1 B2 B3 B4 B5 B6 B7 B8
DIR
G
IC6
74HC574N
1D 2D 3D 4D 5D 6D 7D 8D
1Q 2Q 3Q 4Q 5Q 6Q 7Q 8Q
CLK
OC
IC7
74HC574N
U$1
BACKPLANE_39X
A15 A14 A13 A12 A11 A10 A9 A8 A7 A6 A5 A4 A3 A2 A1 A0 GND VCC PHI2 ~RESET PHI0 ~IRQ SPARE1 R/~W RDY SYNC D0 D1 D2 D3 D4 D5 D6 D7 TX RX ~NMI SPARE2 SPARE3
IC3C 74HC04N
IC3B 74HC04N
IC3A 74HC04N
IC3F 74HC04N
IC3E 74HC04N
IC3D 74HC04N
IC4A 74HC32N
IC4B 74HC32N
IC8
74AC138N
~CE SELECTED WITH
ADDRESS BXXX (1011) Y3
74HC32N IC4D
74HC32N IC4C
IC3P IC4P IC5P IC6P IC7P IC8P
Boogs
B06502
VDU_TMS_final_rev01
30/11/2024 13:07
Sheet: 1/1