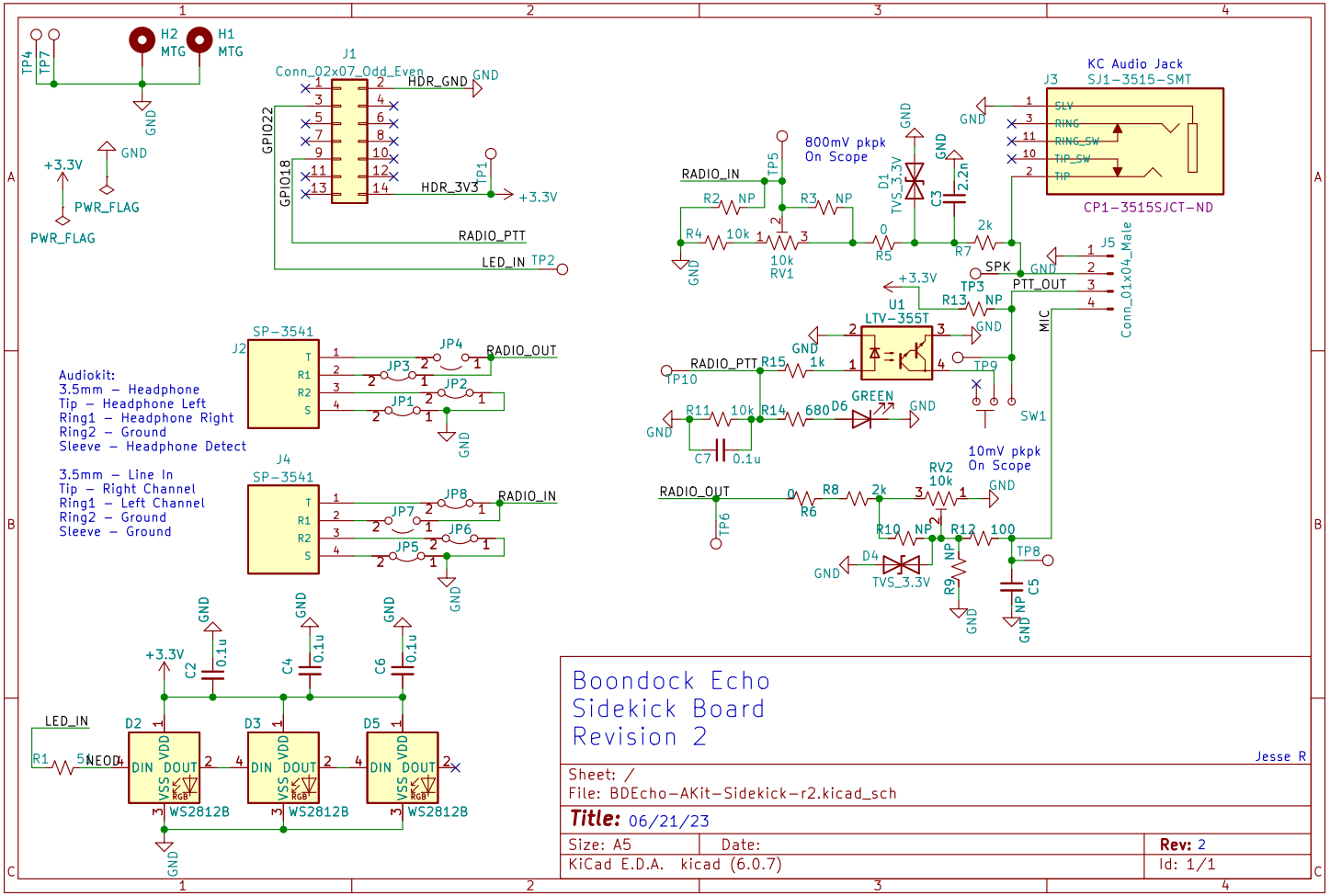
H2 MTG
H1 MTG
TP4
TP7
GND
+3.3V
PWR_FLAG
J1
Conn_02x07_Odd_Even
HDR_GND
GPIO22
GPIO18
HDR_3V3
TP1
RADIO_PTT
LED_IN
TP2
KC Audio Jack
SJ1-3515-SMT
J3
SLV
RING
RING_SW
TIP_SW
TIP
CP1-3515SJCT-ND
800mV pkpk
On Scope
RADIO_IN
TP5
R2 NP
R3 NP
R4 10k
10k
RV1
D1
TVS_3.3V
C3
2.2n
R5 0
R7 2k
SPK
PTT_OUT
J5
Conn_01x04_Male
MIC
TP3
R13 NP
U1
LTV-355T
RADIO_PTT
TP10
R15 1k
TP9
SW1
R11 10k
R14 680
D6
GREEN
C7 0.1u
10mV pkpk
On Scope
RV2
10k
RADIO_OUT
TP6
R6 0
R8 2k
R10 NP
R12 100
D4
TVS_3.3V
R9 NP
C5 NP
TP8
Audiokit:
3.5mm – Headphone
Tip – Headphone Left
Ring1 – Headphone Right
Ring2 – Ground
Sleeve – Headphone Detect
J2
SP-3541
T
R1
R2
S
JP4
JP3
JP2
JP1
RADIO_OUT
3.5mm – Line In
Tip – Right Channel
Ring1 – Left Channel
Ring2 – Ground
Sleeve – Ground
J4
SP-3541
JP8
JP7
JP6
JP5
RADIO_IN
C2 0.1u
C4 0.1u
C6 0.1u
LED_IN
R1 510
NEOD
D2
D3
D5
DIN
DOUT
VDD
VSS
WS2812B
Boondock Echo
Sidekick Board
Revision 2
Jesse R
Sheet: /
File: BDEcho-AKit-Sidekick-r2.kicad_sch
Title: 06/21/23
Size: A5
Date:
Rev: 2
KiCad E.D.A. kicad (6.0.7)
Id: 1/1