UNIVERSITY OF COPENHAGEN

MSc in Quantum Information Science

Theory of Correlated Optimized Virtual Orbitals (COVO) and a preliminary implementation of the method

A PREP Project

Tobias Born Clausen

Supervised by Prof. Stephan P. A. Sauer and Assistant Prof. Phillip W. K. Jensen

24. October 2025

Tobias Born Clausen

Theory of Correlated Optimized Virtual Orbitals (COVO) and a preliminary implementation of the method

MSc in Quantum Information Science, 24. October 2025

Supervisors: Prof. Stephan P. A. Sauer and Assistant Prof. Phillip W. K. Jensen

University of Copenhagen

Faculty of Science

Department of Chemistry

Universitetsparken 5

2100 Copenhagen N

Abstract. This PREP project presents a novel approach to optimizing virtual orbitals in quantum chemistry calculations, focusing on the water molecule as a case study. By incorporating electron correlation effects through the use of correlated optimized virtual orbitals (COVO), we aim to improve the accuracy of electronic structure predictions. Our methodology involves a detailed analysis of the COVO optimization procedure, including the construction of the configuration interaction Hamiltonian and the selection of relevant electronic configurations. The results demonstrate that COVO can be applied to orbital molecules with chemical basis sets, in contrast to previous methodology that primarily utilized plane wave basis sets.

Table of Contents

1 Introduction . . . 2
2 Hartree-Fock (HF) Method . . . 2
  2.1 Self-Consistent Field (SCF) Procedure . . . 5
3 Correlated Optimized Virtual Orbitals (COVO) . . . 7
  3.1 COVO Procedure . . . 7
  3.2 Hamiltonian matrix Elements Evaluation . . . 13
  3.3 Hamiltonian Matrix Elements Derivative . . . 17
  3.4 COVO Gradient Equation . . . 18
4 Implementation of Configuration Interaction (CI) Matrix Elements . . . 20
  4.1 System Setup . . . 20
  4.2 Key Results and Verification . . . 22
5 Conclusion . . . 26
6 Appendix . . . 28
  6.1 Appendix A: Derivation of open-shell energy expectation values . . . 28
  6.2 Appendix B: Derivation of the energy expectation values in water molecule . . . 29
  6.3 Appendix C: COVO Implementation Code . . . 39

1 Introduction

The accurate description of electronic structures in molecules remains a fundamental challenge in quantum chemistry. Traditional methods such as Hartree-Fock (HF) and Density Functional Theory (DFT) often inadequately capture electron correlation effects, particularly concerning virtual orbitals. The Correlated Optimized Virtual Orbitals (COVO) method presents a promising solution by optimizing virtual orbitals to account for electron correlation effects. The inclusion of COVO improves on HF orbitals by providing a more accurate description of the electronic structure, which is crucial for predicting molecular properties and behaviors. This project does the initial implementation and applies the COVO method to the water molecule using the PySCF and SlowQuant software packages. Unlike plane wave approaches, as demonstrated in previous work [1], we utilize molecular orbitals as our basis. Note that the COVO method is similar to the previously developed Optimized Virtual Orbital Space (OVOS) method [1]. The key difference between molecular orbitals' basis in COVO and OVOS, is that a second-order Hylleraas functional is used to optimize the virtual orbitals in OVOS, whereas COVO are optimized through configuration interaction (CI) calculations. The water molecule, with its well-established electronic structure and importance in chemical and biological systems, provides an excellent benchmark for evaluating COVO performance. This project provides the initial evaluation and expression of COVO, covering CI calculations. Through this study, we explore the initial theoretical framework, implementation strategies, and initial results of applying the COVO method to the water molecule.

This PREP project consists of several key components. In Section 2, we introduce the Hartree-Fock (HF) method and the Self-Consistent Field (SCF) procedure. In Section 3, we delve into the theoretical background of the COVO method, including its formulation and the underlying principles of electron correlation. We will then discuss the initial implementation details in Section 4, including the choice of software packages and the specific methodologies employed in our calculations. In Section 5, we present the results of our initial COVO calculations for the water molecule.

2 Hartree-Fock (HF) Method

The Hartree-Fock (HF) method is a mean-field approach to approximate the solution of the many-body wavefunction, such as a molecule [3]. The HF method transforms the many-body problem into a pseudo one-particle system [1], representing electrons as occupying a set of molecular orbitals (MOs). The HF method employs the variational principle to find the optimal set of MOs that minimize the total energy of the system, leading to a self-consistent field (SCF) procedure.

Using the Roothan-Hall formalism [4] (see Section 10.6), the MOs are expressed as linear combinations of atomic orbitals (AOs), denoted χ_μ. The formalism variationally conditions the AO coefficients c^i_μ. The HF ground state wavefunction is approximated as a single Slater determinant $|HF\rangle$, constructed from the occupied MOs. Since the HF is a closed shell state, the Slater determinant can be

expressed as a product state of spatial orbitals, see Figure 1 for the example of the H_2 molecule. The HF energy is calculated as the expectation value of the Hamiltonian operator, $\hat{H}$, with respect to the Slater determinant:

$$\begin{aligned} E_{HF} &= \langle \psi_{HF} | \hat{H} | \psi_{HF} \rangle \\ &= \sum_i \langle \phi^i | \hat{h} | \phi^i \rangle + \frac{1}{2} \sum_i \sum_j \left(\langle \phi^i \phi^i | \hat{g} | \phi^j \phi^j \rangle - \langle \phi^i \phi^j | \hat{g} | \phi^j \phi^i \rangle \right) + h_{nuc} \\ &= \sum_i 2h_{ii} + \sum_i \sum_j (2g_{iijj} - g_{ijji}) + h_{nuc} \end{aligned} \tag{2.1}$$

The one-electron integrals, $h_{ii} = \langle \phi^i | \hat{h} | \phi^i \rangle$, account for the kinetic energy and nuclear attraction of electrons in MO ϕ^i. The two-electron integrals, g_{iijj} and g_{ijji}, represent the Coulomb and exchange interactions between electrons in MOs ϕ^i and ϕ^j. The term h_{nuc} accounts for the nuclear-nuclear repulsion energy. The mean-field approximation arises in the two-electron integrals, where each electron is considered to move in the average field created by all other electrons.

Atomic Orbitals (AOs) Each atomic orbital (AO), χ_μ, is constructed from a set of basis functions, chosen to represent the spatial distribution of electrons around atoms. We say that the AOs are localized around each nucleus, see Figure 1 for the example of H_2.

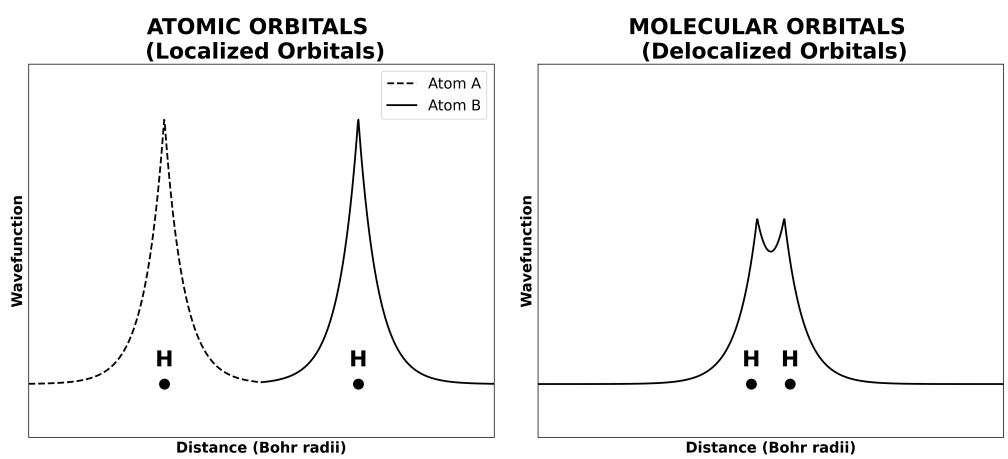

Fig. 1: Localized and delocalized orbitals [4] (see Section 5.2). The difference of AO and MO. Left: Atomic orbitals (AOs) are localized around individual nuclei, representing the probability distribution of electrons in isolated atoms. Right: Molecular orbitals (MOs) are delocalized over the entire molecule, formed by the linear combination of AOs, representing the probability distribution of electrons in a bonded system.

For example, when choosing an AO basis set, a common basis set is the minimal STO-3G, which stands for "Slater Type Orbital approximated by 3 Gaussian functions". In this approach, each AO is represented as a linear combination of three Gaussian functions, providing a computationally efficient approximation to the true Slater-type orbitals. The STO-3G basis set includes only the core and valence AOs, making it a minimal basis set. The coefficients and exponents for the Gaussian functions are given in standard quantum chemistry references [4] (see section 8.2), summarized in Table 1.

STO-3G	i-th Gaussian (α_{iG}, c_{iG})					
	α_{1G}	c_{1G}	α_{2G}	c_{2G}	α_{3G}	c_{3G}
1s	2.22766	0.154329	0.405771	0.535528	0.109818	0.444653
2s	0.994203	-0.0999672	0.231031	0.399515	0.0751386	0.700115
2p	0.994203	0.155916	0.231031	0.607684	0.0751386	0.391957

Table 1: STO-3G basis set parameters for 1s, 2s, and 2p AOs.

For the example of the water molecule, the core and valence AOs are $1s$ for each hydrogen and $\{1s, 2s, 2p_x, 2p_y, 2p_z\}$ for oxygen, creating the set STO-3G $= \{1s, 2s, 2p_x, 2p_y, 2p_z, 1s, 1s\}$ with the number of basis functions $M_{basis} = 7$. That is, we can write up an example of an AO, the $1s$ of oxygen as:

$$|\chi_{1s}\rangle = \sum_{i=1}^{3} c_{iG}^{1s} \left(e^{-\alpha_{iG}^{1s} r^2}\right) \tag{2.2}$$

where r is the distance from the nucleus.

Molecular Orbitals (MOs) Electrons in a molecule are described as occupying molecular orbitals (MOs), denoted by $\Phi = \{\phi^1, \phi^2, \ldots, \phi^n\}$. A MO ϕ^i is illustrated in Figure 2. Conceptually, MOs arise from the combination and overlap of AOs, resulting in electron clouds that are delocalized across the entire molecule, see Figure 1. In a mathematical representation, the i-th MO is a linear combination of AOs (LCAO), denoted χ_μ, weighted by coefficients c_μ^i:

$$\left|\phi^i\right\rangle = \sum_{\mu}^{M_{basis}} c_\mu^i \ |\chi_\mu\rangle \tag{2.3}$$

where M_{basis} is the number of basis functions.

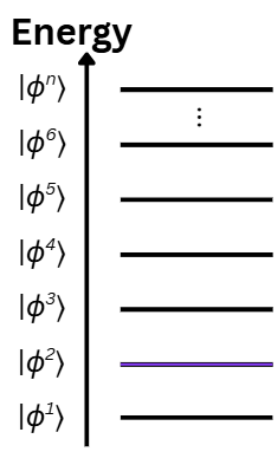

Fig. 2: Molecular orbitals representation.

2.1 Self-Consistent Field (SCF) Procedure

To obtain the molecular coefficients for the MOs (see equation 2.3), we need to introduce the Self-Consistent Field (SCF) procedure [4] (see Section 10.6). The SCF procedure is an iterative method used to find the optimal set of MOs that minimize the total energy of the system within the HF framework. The goal of the SCF procedure is to achieve self-consistency, where the input MOs used to construct the Fock operator yield the same MOs upon solving the HF equations.

To uphold orthonormality of the MOs during the minimization process, we introduce the Lagrangian method:

$$\mathcal{L}_{HF} = \langle \psi_{HF} | \hat{H} | \psi_{HF} \rangle - \sum_{i,j} \epsilon_{ij} \left(\left\langle \phi^i \middle| \phi^j \right\rangle - \delta_{ij} \right) \tag{2.4}$$

where ϵ_{ij} are the Lagrange multipliers. Note, for real orbitals $\epsilon_{ij} = \epsilon_{ji}$, we write instead a symmetric matrix $\boldsymbol{\epsilon}$. See equation 2.1 for the HF energy expression.

The variational principle states that the ground state energy of a quantum system is the lowest possible energy that can be achieved by any trial wavefunction, therefore we minimize the HF Lagrangian with respect to the MO coefficients, c^i_ν:

$$\frac{\partial \mathcal{L}_{HF}}{\partial c^i_\nu} = 0 \tag{2.5}$$

Evaluating the derivative gives:

$$4h_{\nu i} + 4 \sum_j \left(2g_{\nu ijj} - g_{\nu jji} \right) - 2 \sum_j \epsilon_{ij} S_{\nu j} = 0 \tag{2.6}$$

where $S_{\nu j} = \left\langle \chi_\nu \middle| \phi^j \right\rangle$ is the overlap integral between the AO χ_ν and the MO ϕ^j.

Define the Lagrange multipliers to be the MO energies, $\epsilon_{ij} = \epsilon^i \delta_{ij}$, leading to the HF equations:

$$\sum_\mu c^i_\mu f^{AO}_{\nu\mu} = \epsilon^i \sum_\mu c^i_\mu S_{\nu\mu} \tag{2.7}$$

where $f^{AO}_{\nu\mu}$ are the elements of the Fock operator in the AO basis.

To determine the optimal coefficients, c^i_μ, that define the MOs, begin with an initial guess. Continue with an iterative procedure until the HF state energy converges to a stable minimum, in accordance with the variational principle. This self-consistent process ensures that the MOs and their energies are consistent with the mean-field generated by all electrons in the system [4] (see Section 10.6).

The HF state does not equal the ground state of the full electronic Hamiltonian, but an approximation, $\hat{H}\left|\psi_{HF}\right\rangle \neq E_G\left|\psi_{\psi_{HF}}\right\rangle$. The SCF procedure refines this approximation iteratively, aiming to minimize the energy expectation value:

$$\min_{c_\mu^i} \left\langle \psi_{HF}\right| \hat{H}\left|\psi_{HF}\right\rangle = E_{HF} \tag{2.8}$$

The HF state is a Slater determinant which gives the lowest energy within the space of single determinants.

The SCF procedure can be summarized in the following steps, inspired by [3] (see Section 3.4.6):

Step 1: Construct the Fock operator, $\hat{f}^i$, based on the current guess of the MOs.

The Fock operator, $\hat{f}^i$, acts on the i-th orbital but takes into consideration all the occupied orbitals. An effective energy operator, accounting for the kinetic energy, attraction to all nuclei (one-electron integral), and repulsion to all other electrons (two-electron integrals).

$$f_{\nu\mu}^{AO} = h_{\nu\mu} + \sum_k \left(2g_{\nu\mu ii} - g_{\nu i i\mu}\right) \tag{2.9}$$

where $\hat{h} = h_{ii}$ is the one-electron operator, $\hat{g} = g_{iijj}$ is the two-electron operator, accounting for electron-electron repulsion.

Step 2: Solve the HF equations to obtain new MOs and their corresponding energies.

Diagonalize the Fock operator to find the molecular orbitals and their associated energies, solving the eigenvalue problem for the Fock operator. The HF equations are given by:

$$\hat{f}^i\left|\phi^i\right\rangle = \epsilon^i\left|\phi^i\right\rangle \tag{2.10}$$

where ϵ^i is the energy associated with the i-th MO.

Step 3: Update the MOs with the newly obtained ones.

The resulting set of MOs (the canonical MOs) are eigenfunctions of the Fock operator and have well-defined energies, ϵ_i.

Step 4: Check for convergence: if the change in energy or MOs is below a predefined threshold, stop; otherwise, return to Step 1.

The threshold for convergence is set to 10^{-8} Hartree.

Fock Matrix Recognize solving the HF equations until convergence in matrix form by representing the Fock operator as, $F_{\mu,\nu} = \langle \chi_\mu | \hat{f} | \chi_\nu \rangle$, where χ_μ and χ_ν are the AO basis functions. The MO coefficients are collected in the matrix C, and the overlap between AO basis functions is described by the overlap matrix $S_{\mu,\nu} = \langle \chi_\mu | \chi_\nu \rangle$. Define the matrix form of the HF equations:

$$\boldsymbol{F}\ \boldsymbol{C} = \boldsymbol{\epsilon}\ \boldsymbol{S}\ \boldsymbol{C} \tag{2.11}$$

where $\boldsymbol{F}$ is the Fock matrix, $\boldsymbol{C}$ is the MO coefficient matrix, $\boldsymbol{\epsilon}$ is the diagonal matrix of orbital energies, and $\boldsymbol{S}$ is the overlap matrix.

Aufbau Principle Numbering the MOs in ascending order based on their energy levels, ϵ^i, the lowest energy MOs are filled first. Each MO can accommodate pairs of electrons with opposite spins. The water molecule has a total of 10 electrons. For example, applying Aufbau to the water molecule, the first five MOs are filled with two electrons each, resulting in a closed-shell configuration where all electrons are paired, see Figure 3. Define the total number of occupied MOs as 5. The active space chosen as the last occupied MO, and inactive space as the remaining occupied MOs. Leaving the higher energy MOs unoccupied as virtual orbitals. The occupied MOs are denoted inactive as closed-shelled and active as 5-th orbital, and the 6,7-th as virtual MOs, respectively colored blue and red, see Figure 3.

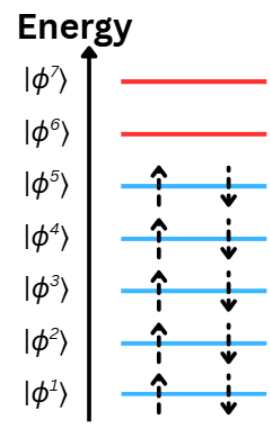

Fig. 3: Water molecule in minimal STO-3G basis set MOs, in restricted HF, applying the aufbau principle.

3 Correlated Optimized Virtual Orbitals (COVO)

The COVO method is a post-HF method that aims to improve the description of virtual orbitals by incorporating electron correlation effects [1]. What follows is a detailed explanation of the COVO optimization procedure, including the construction of the Configuration Interaction Hamiltonian, the selection of electronic configurations, the minimization of the total energy with respect to the virtual orbital coefficients, and the orthonormal constraint.

3.1 COVO Procedure

The generalized COVO procedure can be summarized as follows:

Step 1: Build Configuration Interaction Hamiltonian ($\boldsymbol{H}_{CI}$)

To take electronic configurations between the active orbital and the current virtual orbital into account, formalize the Configuration Interaction (CI) to expand on HF, see [2].

The electronic configurations come in the form of Slater determinants, denoted singlet, triplet, quadric, ... configurations. Together they form the Full Configuration Interaction (FCI). Truncate this space to the subspace of the singlet configuration, Ψ_s for $s \in \{g, e, m\}$, on the account of expecting the virtual orbital to be a linear combination of three singlet configurations, see Figure 4. This expectation is based off the molecule being of a singlet ground state. The singlet configuration is defined by the total spin being equal to zero, $\hat{S}^2 |\Psi_s\rangle = 0$.

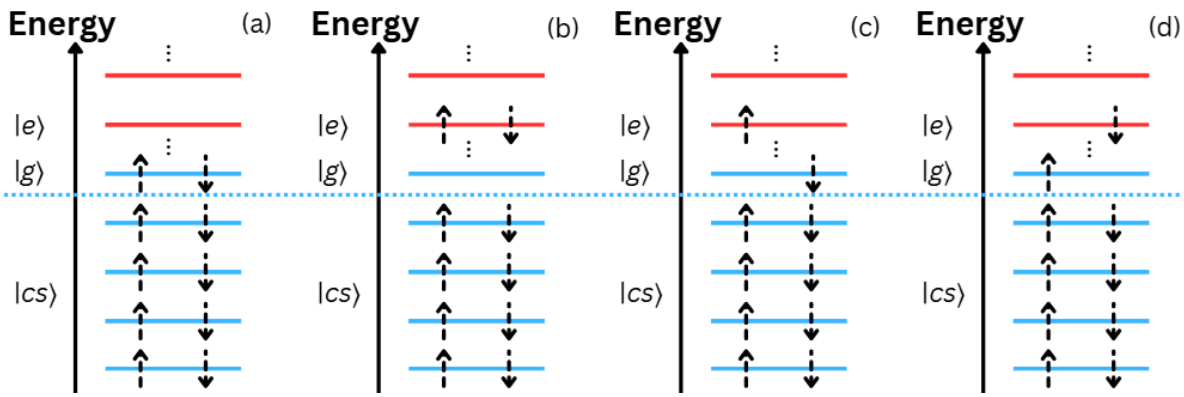

Fig. 4: Subspace of electronic configurations used in COVO, where (a) $|\Psi_g\rangle$ is the configuration of filling electrons from lowest orbital, commonly referred to as the HF state, (b) $|\Psi_e\rangle$ is the double excited configuration, and (c,d) $|\Psi_m\rangle$ is the one-electron mixed configuration. Stripped blue line indicates the separation between active and inactive orbitals.

To encapsulate the electronic interactions within the chosen subspace and capture correlation effects beyond the HF approximation, construct the CI-Matrix for the current virtual orbital. Enhance correlation effects by calculating the expectation value of the Hamiltonian operator, $\hat{H}$, with respect to each configuration, $\langle\Psi_k| \hat{H} |\Psi_l\rangle$ for $k, l \in \{g, e, m\}$:

$$\boldsymbol{H}_{CI} = \begin{bmatrix} \langle\Psi_g| \hat{H} |\Psi_g\rangle & \langle\Psi_g| \hat{H} |\Psi_e\rangle & \langle\Psi_g| \hat{H} |\Psi_m\rangle \\ \langle\Psi_e| \hat{H} |\Psi_g\rangle & \langle\Psi_e| \hat{H} |\Psi_e\rangle & \langle\Psi_e| \hat{H} |\Psi_m\rangle \\ \langle\Psi_m| \hat{H} |\Psi_g\rangle & \langle\Psi_m| \hat{H} |\Psi_e\rangle & \langle\Psi_m| \hat{H} |\Psi_m\rangle \end{bmatrix}, \qquad \boldsymbol{H}_{CI}^{\dagger} = \boldsymbol{H}_{CI} \tag{3.1}$$

Step 2: Ground state

Diagonalize $\boldsymbol{H}_{CI}$ and collect the selected CI expansion coefficients for the normalized ground state:

$$|\Phi_g\rangle = \sum_{i \in g,e,m} C_i |\Psi_i\rangle = C_g |\Psi_g\rangle + C_e |\Psi_e\rangle + C_m |\Psi_m\rangle, \qquad |C_g|^2 + |C_e|^2 + |C_m|^2 = 1 \tag{3.2}$$

Further, denote the ground state energy as the lowest eigenvalue of the CI matrix,

$$\boldsymbol{H}_{CI} \ |\Phi_g\rangle = E_g \ |\Phi_g\rangle \tag{3.3}$$

Step 3: Minimize total energy

With respect to the currently optimizing virtual orbital, $|e\rangle$, define the LCAO, MO coeff. $c_{\mu,e}$ from HF-SCF, and amplitude vector, $\vec{c}_e$, we write:

$$|\phi^e\rangle = \sum_{\mu}^{M_{basis}} c_{\mu,e} \, |\chi_\mu\rangle \, , \quad \vec{c}_e = \Big[c_{1,e} \; c_{2,e} \; \cdots \; c_{n,e}\Big]^T . \tag{3.4}$$

Minimize the total energy of the ground state by setting the derivates to zero, calculating the gradient:

$$\frac{\partial \, \langle \Phi_g | \, \hat{H} \, | \Phi_g \rangle}{\partial \vec{c}_e} = \Big[\tfrac{\partial \langle \Phi_g | \hat{H} | \Phi_g \rangle}{\partial c_{1,e}} \; \tfrac{\partial \langle \Phi_g | \hat{H} | \Phi_g \rangle}{\partial c_{2,e}} \; \cdots \; \tfrac{\partial \langle \Phi_g | \hat{H} | \Phi_g \rangle}{\partial c_{n,e}}\Big]^T \tag{3.5}$$

Each element has the form:

$$\begin{aligned}
\frac{\partial \, \langle \Phi_g | \, \hat{H} \, | \Phi_g \rangle}{\partial c_{n,e}} &= C_g^* \frac{\partial \, \langle \Psi_g | \, \hat{H} \, | \Psi_g \rangle}{\partial c_{n,e}} C_g + C_g^* \frac{\partial \, \langle \Psi_g | \, \hat{H} \, | \Psi_e \rangle}{\partial c_{n,e}} C_e + C_g^* \frac{\partial \, \langle \Psi_g | \, \hat{H} \, | \Psi_m \rangle}{\partial c_{n,e}} C_m \\
&+ C_e^* \frac{\partial \, \langle \Psi_e | \, \hat{H} \, | \Psi_g \rangle}{\partial c_{n,e}} C_g + C_e^* \frac{\partial \, \langle \Psi_e | \, \hat{H} \, | \Psi_e \rangle}{\partial c_{n,e}} C_e + C_e^* \frac{\partial \, \langle \Psi_e | \, \hat{H} \, | \Psi_m \rangle}{\partial c_{n,e}} C_m \\
&+ C_m^* \frac{\partial \, \langle \Psi_m | \, \hat{H} \, | \Psi_g \rangle}{\partial c_{n,e}} C_g + C_m^* \frac{\partial \, \langle \Psi_m | \, \hat{H} \, | \Psi_e \rangle}{\partial c_{n,e}} C_e + C_m^* \frac{\partial \, \langle \Psi_m | \, \hat{H} \, | \Psi_m \rangle}{\partial c_{n,e}} C_m \\
&= 0
\end{aligned} \tag{3.6}$$

This can be rewritten in matrix form as:

$$\frac{\partial \, \langle \Phi_g | \, \hat{H} \, | \Phi_g \rangle}{\partial c_{n,e}} = \Big[C_g^* \; C_e^* \; C_m^*\Big] \begin{bmatrix} \frac{\partial \langle \Psi_g | \hat{H} | \Psi_g \rangle}{\partial c_{n,e}} & \frac{\partial \langle \Psi_g | \hat{H} | \Psi_e \rangle}{\partial c_{n,e}} & \frac{\partial \langle \Psi_g | \hat{H} | \Psi_m \rangle}{\partial c_{n,e}} \\ \frac{\partial \langle \Psi_e | \hat{H} | \Psi_g \rangle}{\partial c_{n,e}} & \frac{\partial \langle \Psi_e | \hat{H} | \Psi_e \rangle}{\partial c_{n,e}} & \frac{\partial \langle \Psi_e | \hat{H} | \Psi_m \rangle}{\partial c_{n,e}} \\ \frac{\partial \langle \Psi_m | \hat{H} | \Psi_g \rangle}{\partial c_{n,e}} & \frac{\partial \langle \Psi_m | \hat{H} | \Psi_e \rangle}{\partial c_{n,e}} & \frac{\partial \langle \Psi_m | \hat{H} | \Psi_m \rangle}{\partial c_{n,e}} \end{bmatrix} \begin{bmatrix} C_g \\ C_e \\ C_m \end{bmatrix} = 0 \tag{3.7}$$

Or more compactly:

$$\frac{\partial E_g}{\partial c_{n,e}} = \vec{C}^* \frac{\partial \boldsymbol{H}_{CI}}{\partial c_{n,e}} \vec{C} = 0 \tag{3.8}$$

where $\vec{C} = [C_g, C_e, C_m]^T$ is the coefficient vector and $\frac{\partial \boldsymbol{H}}{\partial c_{n,e}}$ is the gradient of the Hamiltonian matrix with respect to the orbital coefficient $c_{n,e}$.

Step 4: Orthonormal constraint

The orthonormality of the electronic configurations must be preserved during the optimization process. This can be enforced by imposing the constraint:

$$\langle \Psi_k | \Psi_l \rangle = \delta_{k,l}, \quad k, l \in \{g, e, m\} \tag{3.9}$$

Hamiltonian The electronic Hamiltonian in the Born-Oppenheimer approximation is denoted in terms of one- and two-electron operators [5] (see Section 2.1.2), here written in atomic units:

$$\hat{H} = -\frac{1}{2} \sum_{i}^{n_{elec}} \nabla_i^2 - \sum_{i}^{n_{elec}} \sum_{I}^{N_{nuclei}} \frac{Z_I}{|r_i - R_I|} + \frac{1}{2} \sum_{i}^{n_{elec}} \sum_{j}^{n_{elec}} \frac{1}{|r_i - r_j|} + h_{nuc} \tag{3.10}$$

Rewrite in short-hand notation and second quantization, where P, Q denotes spin-orbitals:

$$\hat{H} = \sum_{P,Q}^{2n} h_{P,Q} \; a_P^\dagger \; a_Q + \frac{1}{2} \sum_{P,Q,R,S}^{2n} g_{P,Q,R,S} \; a_P^\dagger \; a_R^\dagger \; a_S \; a_Q + h_{nuc} \tag{3.11}$$

here denote the one-electron integral as $h_{P,Q}$ and the two-electron integral as $g_{P,Q,R,S}$. Rewrite to sum over MOs, n, and for each pair of spin-orbitals, $a_P^\dagger a_Q \rightarrow a_{p_\alpha}^\dagger a_{q_\alpha} + a_{p_\beta}^\dagger a_{q_\beta} = E_{p,q}$, and similar for $a_P^\dagger a_R^\dagger a_S a_Q \rightarrow \sum_{\sigma,\tau} a_{p_\sigma}^\dagger a_{r_\tau}^\dagger a_{s_\tau} a_{q_\sigma} = e_{p,q,r,s}$, such that:

$$\hat{H} = \sum_{p,q}^{n} h_{p,q} \; E_{p,q} + \frac{1}{2} \sum_{p,q,r,s}^{n} g_{p,q,r,s} \; e_{p,q,r,s} + h_{nuc} \tag{3.12}$$

note here we omit h_{nuc} in the evaluation of exception values, reapply in code implementation.

N-Electron Integrals The involved integrals are in the restricted HF formalism (RHF), the one-electron integrals are spin-independent, and the two-electron integrals are spin-dependent. The one-electron integrals, take the kinetic energy contribution $-\frac{1}{2}\nabla^2$ and attraction to nuclei $-\sum_I \frac{Z_I}{|r-R_I|}$ into account, and are defined as:

$$h_{p,q} = \int d\vec{x} \; \phi_p^*(\vec{x}) \left(-\frac{1}{2}\nabla^2 - \sum_I \frac{Z_I}{|r - R_I|} \right) \phi_q(\vec{x}), \quad h_{p,q} = h_{q,p}^* = h_{q,p} \text{ (real orbitals)} \tag{3.13}$$

where $\vec{x}$ is the spatial and spin coordinates, $\phi_p(\vec{x})$ and $\phi_q(\vec{x})$ are the p-th and q-th MOs, Z_I is the charge of nucleus I, and R_I is the position of nucleus I. When $p = q$ the integral represents the energy of the orbital per electron. The two-electron integrals, reflect the direct Coulomb interaction, and are

defined as:

$$g_{p,q,r,s} = \int\int d\vec{x}_1 d\vec{x}_2 \; \phi_p^*(\vec{x}_1)\phi_q(\vec{x}_2)\frac{1}{|r_1 - r_2|}\phi_r^*(\vec{x}_1)\phi_s(\vec{x}_2)\delta_{\sigma_p,\sigma_q}\delta_{\sigma_r,\sigma_s} \tag{3.14}$$

and:

$$g_{p,q,r,s} = g_{q,p,r,s} = g_{q,p,s,r} = g_{q,p,r,s} \text{ (real orbitals)} \tag{3.15}$$

where $\vec{x}$ is the spatial and spin coordinates, $\phi_p(\vec{x})$ and $\phi_q(\vec{x})$ are the p-th and q-th MOs, at coordinates $\vec{x}_1$ and $\vec{x}_2$. Notice that the Kronecker delta functions, $\delta_{\sigma_p,\sigma_q}$ and $\delta_{\sigma_r,\sigma_s}$, ensures that the integrals are only non-zero when the spins of the involved orbitals match, accounting only for electron-electron repulsion between electrons with the same spin. For the following configurations of electrons in MOs, the $g_{p,p,q,q}$ is the Coulomb repulsion between two electrons in orbitals p and q, and for $g_{p,q,q,p}$ we get the exchange interaction between electrons in orbitals p and q. The exchange interaction arises due to the anti-symmetry requirement of the total electronic wavefunction, particles are indistinguishable and wavefunctions must be anti-symmetric, leading to an effective interaction that depends on the overlap of the spatial parts of the orbitals.

Rewriting to AO description, the MOs are expanded in terms of a basis set of AOs, $\chi_\mu(\vec{x})$, as:

$$h_{p,q} = \sum_\mu c_{\mu,p}^* c_{\mu,q} \int d\vec{x} \; \chi_\mu^*(\vec{x}) \left(-\frac{1}{2}\nabla^2 - \sum_I \frac{Z_I}{|r - R_I|} \right) \chi_\mu(\vec{x}), \tag{3.16}$$

$$g_{p,q,r,s} = \sum_\mu c_{\mu,p}^* c_{\mu,q} c_{\mu,r}^* c_{\mu,s} \int\int d\vec{x}_1 d\vec{x}_2 \; \chi_p^*(\vec{x}_1)\chi_q(\vec{x}_2)\frac{1}{|r_1 - r_2|}\chi_r^*(\vec{x}_1)\chi_s(\vec{x}_2)\delta_{\sigma_p,\sigma_q}\delta_{\sigma_r,\sigma_s} \tag{3.17}$$

this exposes the dependence of the integrals on the MO coefficients, $c_{\mu,p}$, $c_{\mu,q}$, $c_{\mu,r}$, and $c_{\mu,s}$.

Electronic Configurations Denote the Slater determinants in shorthand notation, where each digit represents the occupation of each spin orbital, from the lowest energy MO to the highest:

$$|\Psi_g\rangle = |11\ 11\ 11\ 11\ 11\ 00\ ...\ 00\rangle\,, \quad |\Psi_e\rangle = |11\ 11\ 11\ 11\ 00\ ...\ 11\ ...\ 00\rangle\,, \quad |\Psi_m\rangle = \left|\Psi_m^{\alpha\beta}\right\rangle - \left|\Psi_m^{\beta\alpha}\right\rangle, \tag{3.18}$$

where,

$$\left|\Psi_m^{\alpha\beta}\right\rangle = \frac{1}{\sqrt{2}}\,|11\ 11\ 11\ 11\ 10\ ...\ 01\ ...\ 00\rangle\,, \quad \left|\Psi_m^{\beta\alpha}\right\rangle = \frac{1}{\sqrt{2}}\,|11\ 11\ 11\ 11\ 01\ ...\ 10\ ...\ 00\rangle \tag{3.19}$$

here $|\Psi_g\rangle$ is the ground state configuration, $|\Psi_e\rangle$ is the double excited configuration, and $|\Psi_m\rangle$ is the mixed configuration. The mixed configuration is a linear combination of two determinants, $\left|\Psi_m^{\alpha\beta}\right\rangle$ and $\left|\Psi_m^{\beta\alpha}\right\rangle$, representing different spin arrangements of the electrons in the active and virtual orbitals.

Ligner Product states så de passer ikke med det op over...

Introduce a compact notation for the singlet configurations, denote the closed-shell orbitals $|cs\rangle = |11\ 11\ 11\ 11\rangle$, simplifying the notation:

$$|\Psi_g\rangle = |cs\rangle\,|11\ 00\ ...\ 00\rangle\,, \quad |\Psi_e\rangle = |cs\rangle\,|00\ ...\ 11\ ...\ 00\rangle\,, \tag{3.20}$$

$$|\Psi_m\rangle = \frac{1}{\sqrt{2}}\,|cs\rangle\,(|10\ ...\ 01\ ...\ 00\rangle - |01\ ...\ 10\ ...\ 00\rangle) \tag{3.21}$$

recognize we can denote the active orbital as $|\phi_g\rangle = |g_\alpha g_\beta\rangle$ and the virtual orbital as $|\phi_e\rangle = |00\ ...\ e_\alpha e_\beta\ ...\ 00\rangle$:

$$|\Psi_g\rangle = |cs\rangle\,|1_{g_\alpha} 1_{g_\beta}\rangle\,|00\ ...\ 0_{e_\alpha} 0_{e_\beta}\ ...\ 00\rangle\,, \quad |\Psi_e\rangle = |cs\rangle\,|0_{g_\alpha} 0_{g_\beta}\rangle\,|00\ ...\ 1_{e_\alpha} 1_{e_\beta}\ ...\ 00\rangle\,, \tag{3.22}$$

$$|\Psi_m\rangle = \frac{1}{\sqrt{2}}\,|cs\rangle\,\left(|1_{g_\alpha} 0_{g_\beta}\rangle\,|00\ ...\ 0_{e_\alpha} 1_{e_\beta}\ ...\ 00\rangle - |0_{g_\alpha} 1_{g_\beta}\rangle\,|00\ ...\ 1_{e_\alpha} 0_{e_\beta}\ ...\ 00\rangle\right) \tag{3.23}$$

Note, COVO only changes the virtual orbital, $|\phi_e\rangle$, while the active orbital, $|\phi_g\rangle$, and closed-shell orbitals, $|cs\rangle$, remain fixed.

Recognize the relation to $|\psi_g\rangle$ for $|\psi_e\rangle$ and $|\psi_m\rangle$, such that:

$$|\psi_e\rangle = a^\dagger_{e_\alpha} a^\dagger_{e_\alpha} a_{g_\alpha} a_{g_\beta}\,|\psi_g\rangle = \frac{1}{2}\hat{E}_{e,g}\hat{E}_{e,g}\,|\psi_g\rangle \tag{3.24}$$

and,

$$|\psi_m\rangle = \frac{1}{\sqrt{2}}(a^\dagger_{e_\beta} a_{g_\beta} + a^\dagger_{e_\alpha} a_{g_\alpha})\,|\psi_g\rangle = \frac{1}{\sqrt{2}}\hat{E}_{e,g}\,|\psi_g\rangle\,, \tag{3.25}$$

let $\hat{E}$ be the singlet excitation operators, and $\hat{E}\hat{E}$ be the two electron singlet excitation operators. This relation is useful because it allows us to express the excited configurations in terms of excitation operators acting on the ground state configuration, simplifying the evaluation of matrix elements. More over, this allows us to create the singlet states from the HF state, for which $|HF\rangle = |\psi_g\rangle$ is true.

For the example of the water molecule, the active orbital is the 5-th orbital, denoted as $|g\rangle$, and the virtual orbital being optimized is the 6-th orbital, denoted as $|e\rangle$. The closed-shell orbitals are $|cs\rangle$, the 1-st to 4-th orbitals. We write the CI configuration as, for the initial round of COVO optimization:

$$|\Psi_g\rangle = |cs\rangle\,|11\ 00\ 00\rangle\,, \quad |\Psi_e\rangle = |cs\rangle\,|00\ 11\ 00\rangle\,, \tag{3.26}$$

$$|\Psi_m\rangle = \frac{1}{\sqrt{2}}\,|cs\rangle\,(|10\ 01\ 00\rangle - |01\ 10\ 00\rangle) \tag{3.27}$$

3.2 Hamiltonian matrix Elements Evaluation

So far we explained the general procedure, now we seek to explain how to evaluate each element in the Hamiltonian matrix, $\langle k| \hat{H} |l\rangle$ for $k, l \in \{g, e, m\}$.

Reduced Density Matrix (RDM) To express each expectation value, $\langle k| \hat{H} |k\rangle$ for $k \in \{g, e, m\}$, rely on reduced density matrix formalism, as outlined in [4] (see Section 1.7.3). The one-electron reduced density matrix (1-RDM):

$$D^k_{p,q} = \langle k| E_{p,q} |k\rangle = \delta_{p_\alpha,q_\alpha} + \delta_{p_\beta,q_\beta} = 2\delta_{p,q} \tag{3.28}$$

and the two-electron reduced density matrix (2-RDM):

$$D^k_{p,q,r,s} = \langle k| e_{p,q,r,s} |k\rangle = D^k_{p,q} D^k_{r,s} - \frac{1}{2} D^k_{p,s} D^k_{p,s} \tag{3.29}$$

for a closed-shell configuration:

$$D^k_{p,q,r,s} = 4\delta_{p,q}\delta_{r,s} - 2\delta_{q,r}\delta_{p,s} \tag{3.30}$$

and express in spin-orbital notation for an open-shell configuration:

$$\begin{aligned} D^k_{p,q,r,s} &= \left(\delta_{p_\alpha,q_\alpha} + \delta_{p_\beta,q_\beta}\right)\left(\delta_{r_\alpha,s_\alpha} + \delta_{r_\beta,s_\beta}\right) - \frac{1}{2}\left(\delta_{q_\alpha,r_\alpha} + \delta_{q_\beta,r_\beta}\right)\left(\delta_{p_\alpha,s_\alpha} + \delta_{p_\beta,s_\beta}\right) \\ &= \delta_{p_\alpha,q_\alpha}\delta_{r_\alpha,s_\alpha} + \delta_{p_\beta,q_\beta}\delta_{r_\beta,s_\beta} + \delta_{p_\beta,q_\beta}\delta_{r_\alpha,s_\alpha} + \delta_{p_\alpha,q_\alpha}\delta_{r_\beta,s_\beta} \\ &\quad - \frac{1}{2}\,\delta_{q_\alpha,r_\alpha}\delta_{p_\alpha,s_\alpha} - \frac{1}{2}\,\delta_{q_\beta,r_\beta}\delta_{p_\alpha,s_\alpha} - \frac{1}{2}\,\delta_{q_\alpha,r_\alpha}\delta_{p_\beta,s_\beta} - \frac{1}{2}\,\delta_{q_\beta,r_\beta}\delta_{p_\beta,s_\beta} \end{aligned} \tag{3.31}$$

In the case of an expectation value between two different configurations, $\langle k| \hat{H} |l\rangle$ for $k, l \in \{g, e, m\}$ and $k \neq l$, the RDMs will have a different form. It will take combinations of $a^\dagger$ and a operators, for such we rewrite the 1-RDM and 2-RDM in terms of these operators [4] (see Section 1.2.3):

$$D^{k,l}_{p,q} = \langle \Psi_k| E_{p,q} |\Psi_l\rangle = \langle \Psi_k| a^\dagger_{p_\alpha} a_{q_\alpha} + a^\dagger_{p_\beta} a_{q_\beta} |\Psi_l\rangle = \Gamma^k_{p_\alpha}\Gamma^l_{q_\alpha} h_{p_\alpha,q_\alpha} + \Gamma^k_{p_\beta}\Gamma^l_{q_\beta} h_{p_\beta,q_\beta} \tag{3.32}$$

$$D^{k,l}_{p,q,r,s} = \langle \Psi_k| e_{p,q,r,s} |\Psi_l\rangle = \langle \Psi_k| \sum_{\sigma,\tau} a^\dagger_{p_\sigma} a^\dagger_{r_\tau} a_{s_\tau} a_{q_\sigma} |\Psi_l\rangle = \Gamma^k_{p_\sigma}\Gamma^k_{r_\tau}\Gamma^l_{s_\tau}\Gamma^l_{q_\sigma}\left(g_{p_\sigma,q_\sigma,r_\tau,s_\tau} - g_{p_\sigma,r_\tau,s_\tau,q_\sigma}\right) \tag{3.33}$$

here $\Gamma^k_{p_\sigma}$ and $\Gamma^l_{q_\sigma}$ are the occupation numbers for the respective configurations, for odd prior electrons to the orbital take on the value $+1$ and for even prior electrons to the orbital take on the value -1 [4] (see Section 1.2.3).

Expectation Value We express the expectation value of the Hamiltonian with respect to combinations of configurations, $\langle \Psi_k | \hat{H} | \Psi_l \rangle$ for $k, l \in \{g, e, m\}$. Take into account the Hamiltonian is Hermitish, $\langle \Psi_k | \hat{H} | \Psi_l \rangle = \langle \Psi_l | \hat{H} | \Psi_k \rangle$, all values are real. For full derivation of each combination look to Appendix A, here we summarize the results.

Starting with the expectation values of the diagonal elements, $\langle \Psi_k | \hat{H} | \Psi_k \rangle$ for $k \in \{g, e, m\}$.

Express: $\langle \Psi_g | \hat{H} | \Psi_g \rangle$

Recognize $|\Psi_g\rangle$ is a closed shell state, for all orbitals, $\{cs, g\}$, are fully occupied.

$$\langle \Psi_g | \hat{H} | \Psi_g \rangle = \sum_{i \neq e} 2h_{i,i} + \sum_{i,j \neq e} (2g_{i,i,j,j} - g_{i,j,j,i}) \tag{3.34}$$

Express: $\langle \Psi_e | \hat{H} | \Psi_e \rangle$

Recognize $|\Psi_e\rangle$ is a closed shell state, $\{cs, e\}$:

$$\begin{aligned} \langle \Psi_e | \hat{H} | \Psi_e \rangle &= \sum_{i \neq g} 2h_{i,i} + \sum_{i,j \neq g} (2g_{i,i,j,j} - g_{i,j,j,i}) \\ &= \sum_{i \neq g,e} 2h_{i,i} + 2h_{e,e} + \sum_{i,j \neq g,e} (2g_{i,i,j,j} - g_{i,j,j,i}) \\ &\quad + 2 \sum_{i \neq g,e} (2g_{e,e,i,i} - g_{e,i,i,e}) + g_{e,e,e,e} \end{aligned} \tag{3.35}$$

Express: $\langle \Psi_m | \hat{H} | \Psi_m \rangle$

Recognize $|\Psi_d\rangle$ and $|\Psi_u\rangle$ are open shell states, two orbitals are singly occupied. From the definition of $|\Psi_m\rangle$, we have:

$$\langle \Psi_m | \hat{H} | \Psi_m \rangle = \left\langle \psi_m^{\alpha\beta} \middle| \hat{H} \middle| \psi_m^{\alpha\beta} \right\rangle + \left\langle \psi_m^{\beta\alpha} \middle| \hat{H} \middle| \psi_m^{\beta\alpha} \right\rangle - \left\langle \psi_m^{\beta\alpha} \middle| \hat{H} \middle| \psi_m^{\alpha\beta} \right\rangle - \left\langle \psi_m^{\alpha\beta} \middle| \hat{H} \middle| \psi_m^{\beta\alpha} \right\rangle \tag{3.36}$$

Express each term, starting with $\left\langle \psi_m^{\alpha\beta} \middle| \hat{H} \middle| \psi_m^{\alpha\beta} \right\rangle$:

$$\begin{aligned} 2 \left\langle \psi_m^{\alpha\beta} \middle| \hat{H} \middle| \psi_m^{\alpha\beta} \right\rangle &= \sum_{i \neq g,e} 2h_{i,i} + h_{g,g} + h_{e,e} + \sum_{i,j \neq g,e} (2g_{i,i,j,j} - g_{i,j,j,i}) \\ &\quad + \sum_{i \neq g,e} (2g_{g,g,i,i} - g_{g,i,i,g}) + \sum_{i \neq g,e} (2g_{i,i,e,e} - g_{i,e,e,i}) + g_{g,g,e,e} \end{aligned} \tag{3.37}$$

then $\left\langle \psi_m^{\beta\alpha} \right| \hat{H} \left| \psi_m^{\beta\alpha} \right\rangle$:

$$2 \left\langle \psi_m^{\beta\alpha} \right| \hat{H} \left| \psi_m^{\beta\alpha} \right\rangle = \sum_{i \neq g,e} 2h_{i,i} + h_{g,g} + h_{e,e} + \sum_{i,j \neq g,e} (2g_{i,i,j,j} - g_{i,j,j,i}) + \sum_{i \neq g,e} (2g_{g,g,i,i} - g_{g,i,i,g}) + \sum_{i \neq g,e} (2g_{i,i,e,e} - g_{i,e,e,i}) + g_{g,g,e,e} \tag{3.38}$$

The two cross terms are:

$$2 \left\langle \psi_m^{\beta\alpha} \right| \hat{H} \left| \psi_m^{\alpha\beta} \right\rangle = 2 \left\langle \psi_m^{\alpha\beta} \right| \hat{H} \left| \psi_m^{\beta\alpha} \right\rangle = -g_{g,e,e,g} \tag{3.39}$$

Collecting all terms together:

$$\langle \Psi_m | \hat{H} | \Psi_m \rangle = \sum_{i \neq g,e} 2h_{i,i} + h_{g,g} + h_{e,e} + \sum_{i,j \neq g,e} (2g_{i,i,j,j} - g_{i,j,j,i}) + \sum_{i \neq g,e} (2g_{g,g,i,i} - g_{g,i,i,g}) + \sum_{i \neq g,e} (2g_{i,i,e,e} - g_{i,e,e,i}) + g_{g,g,e,e} + g_{g,e,e,g} \tag{3.40}$$

Continue with the off-diagonal elements.

Express: $\langle \Psi_g | \hat{H} | \Psi_e \rangle$

Recognize $|\Psi_g\rangle$ and $|\Psi_e\rangle$ differ by two orbitals, g and e, the expectation value:

$$\langle \Psi_g | \hat{H} | \Psi_e \rangle = g_{g,e,g,e} \tag{3.41}$$

likewise for the Hermitish counterpart:

$$\langle \Psi_e | \hat{H} | \Psi_g \rangle = \langle \Psi_g | \hat{H} | \Psi_e \rangle \tag{3.42}$$

Express: $\langle \Psi_g | \hat{H} | \Psi_m \rangle$

Recognize $|\Psi_g\rangle$ and $|\Psi_m\rangle$ differ by two orbitals, g and e, the expectation value:

$$\langle \Psi_g | \hat{H} | \Psi_m \rangle = \langle \Psi_g | \hat{H} \left| \Psi_m^{\alpha\beta} \right\rangle - \langle \Psi_g | \hat{H} \left| \Psi_m^{\beta\alpha} \right\rangle \tag{3.43}$$

Calculate each term:

$$\sqrt{2} \langle \Psi_g | \hat{H} \left| \Psi_m^{\alpha\beta} \right\rangle = h_{g,e} + \sum_{i \neq g,e} (2g_{g,e,i,i} - g_{g,i,i,e}) + g_{g,e,g,g} \tag{3.44}$$

and:

$$\langle \Psi_g | \hat{H} \left| \Psi_m^{\beta\alpha} \right\rangle = - \langle \Psi_g | \hat{H} \left| \Psi_m^{\alpha\beta} \right\rangle \tag{3.45}$$

Collecting both terms together:

$$\langle \Psi_g | \hat{H} | \Psi_m \rangle = \sqrt{2} \left(h_{g,e} + \sum_{i \neq g,e} (2g_{g,e,i,i} - g_{g,i,i,e}) + g_{g,e,g,g} \right) \tag{3.46}$$

likewise for the Hermitish counterpart:

$$\langle \Psi_m | \hat{H} | \Psi_g \rangle = \langle \Psi_g | \hat{H} | \Psi_m \rangle \tag{3.47}$$

It is worth to note for the initial COVO virtual orbital, being dependent on orbitals obtained from HF-SCF, the Brillouin theorem states that the matrix element between the HF ground state and a singly excited state is zero, $\langle HF | \hat{H} | S \rangle = 0$ [1]. Here we see that $|\Psi_m\rangle$ is a mix of single excited states of $|\Psi_g\rangle$, for which we set this element to zero for the first iteration of COVO:

$$\langle \Psi_m | \hat{H} | \Psi_g \rangle = \langle \Psi_g | \hat{H} | \Psi_m \rangle = 0 \tag{3.48}$$

Express: $\langle \Psi_e | \hat{H} | \Psi_m \rangle$

Recognize $|\Psi_e\rangle$ and $|\Psi_m\rangle$ differ by two orbitals, g and e, the expectation value:

$$\langle \Psi_e | \hat{H} | \Psi_m \rangle = \langle \Psi_e | \hat{H} \left| \Psi_m^{\alpha\beta} \right\rangle - \langle \Psi_e | \hat{H} \left| \Psi_m^{\beta\alpha} \right\rangle \tag{3.49}$$

Calculate each term:

$$\sqrt{2} \langle \Psi_e | \hat{H} \left| \Psi_m^{\alpha\beta} \right\rangle = h_{e,g} + \sum_{i \neq g,e} (2g_{e,g,i,i} - g_{e,i,i,g}) + g_{e,g,g,g} + g_{e,g,e,e} \tag{3.50}$$

and,

$$\langle \Psi_e | \hat{H} \left| \Psi_m^{\beta\alpha} \right\rangle = - \langle \Psi_e | \hat{H} \left| \Psi_m^{\alpha\beta} \right\rangle \tag{3.51}$$

Collecting both terms together:

$$\langle \Psi_e | \hat{H} | \Psi_m \rangle = \sqrt{2} \left(h_{e,g} + \sum_{i \neq g,e} (2g_{e,g,i,i} - g_{e,i,i,g}) + g_{e,g,e,e} \right) \tag{3.52}$$

likewise for the Hermitish counterpart:

$$\langle \Psi_m | \hat{H} | \Psi_e \rangle = \langle \Psi_e | \hat{H} | \Psi_m \rangle \tag{3.53}$$

[1] *Brillouin Theorem Note:* States that the matrix element between the HF ground state and a singly excited state does not interact, $\langle HF | \hat{H} | i \to a \rangle = 0$ [4] (see Section 10.2.3).

3.3 Hamiltonian Matrix Elements Derivative

Now that we have expressed each Hamiltonian matrix element, $\langle \Psi_k | \hat{H} | \Psi_l \rangle$ for $k, l \in \{g, e, m\}$, we seek to express the derivative of each element with respect to the MO coefficients of the virtual orbital, $c_{\mu,e}$.

Gradient Express the derivative for each term:

Express: $\frac{\partial \langle \Psi_g | \hat{H} | \Psi_g \rangle}{\partial c_{\mu,e}}$

Recognize no dependence on virtual orbital, e, in $\langle \Psi_g | \hat{H} | \Psi_g \rangle$, the derivative:

$$\frac{\partial \langle \Psi_g | \hat{H} | \Psi_g \rangle}{\partial c_{\mu,e}} = 0 \tag{3.54}$$

Express: $\frac{\partial \langle \Psi_e | \hat{H} | \Psi_e \rangle}{\partial c_{\mu,e}}$

Recognize a dependence of e in $\langle \Psi_e | \hat{H} | \Psi_e \rangle$, the derivative:

$$\frac{\partial \ \langle \Psi_e | \hat{H} | \Psi_e \rangle}{\partial c_{\mu,e}} = 2 \ \left(2h_{\mu,e} + 2 \sum_{i \neq g,e} (2 \ g_{\mu,e,i,i} - g_{\mu,i,i,e}) + g_{\mu,e,e,e} \right) \tag{3.55}$$

Express: $\frac{\partial \langle \Psi_m | \hat{H} | \Psi_m \rangle}{\partial c_{\mu,e}}$

Recognize a dependence of e in $\langle \Psi_m | \hat{H} | \Psi_m \rangle$, the derivative:

$$\frac{\partial \ \langle \Psi_m | \hat{H} | \Psi_m \rangle}{\partial c_{\mu,e}} = 2 \left(h_{\mu,e} + \sum_{i \neq g,e} (2 \ g_{\mu,e,i,i} - g_{\mu,i,i,e}) + g_{g,g,\mu,e} + g_{\mu,g,e,g} \right) \tag{3.56}$$

Express: $\frac{\delta \langle \Psi_g | \hat{H} | \Psi_e \rangle}{\delta c_{\mu,e}}$

Recognize a dependence of e, the derivative:

$$\frac{\partial \ \langle \Psi_g | \hat{H} | \Psi_e \rangle}{\partial c_{\mu,e}} = 2 \ g_{g,\mu,g,e} \tag{3.57}$$

Express: $\frac{\delta \langle \Psi_e | \hat{H} | \Psi_g \rangle}{\delta c_{\mu,e}}$

Recognize a dependence of e, the derivative:

$$\frac{\partial \ \langle \Psi_e | \hat{H} | \Psi_g \rangle}{\partial c_{\mu,e}} = 2 \ g_{\mu,g,e,g} \tag{3.58}$$

Express: $\frac{\delta\langle\Psi_g|\hat{H}|\Psi_m\rangle}{\delta c_{\mu,e}}$

Recognize a dependence of e, the derivative:

$$\frac{\partial\ \langle\Psi_g|\,\hat{H}\,|\Psi_m\rangle}{\partial c_{\mu,e}} = 2\sqrt{2}\left(h_{g,\mu} + \sum_{i\neq g,e}\left(2g_{g,\mu,i,i} - g_{g,i,i,\mu}\right) + g_{g,\mu,g,g}\right) \tag{3.59}$$

Take into account the Brillouin theorem, for the first iteration of COVO, we set this element to zero:

$$\frac{\partial\ \langle\Psi_g|\,\hat{H}\,|\Psi_m\rangle}{\partial c_{\mu,e}} = 0 \tag{3.60}$$

Express: $\frac{\delta\langle\Psi_m|\hat{H}|\Psi_g\rangle}{\delta c_{\mu,e}}$

Use the Hermitish property:

$$\frac{\partial\ \langle\Psi_m|\,\hat{H}\,|\Psi_g\rangle}{\partial c_{\mu,e}} = \frac{\partial\ \langle\Psi_g|\,\hat{H}\,|\Psi_m\rangle}{\partial c_{\mu,e}} \tag{3.61}$$

Take into account the Brillouin theorem, for the first iteration of COVO, we set this element to zero:

$$\frac{\partial\ \langle\Psi_m|\,\hat{H}\,|\Psi_g\rangle}{\partial c_{\mu,e}} = \frac{\partial\ \langle\Psi_g|\,\hat{H}\,|\Psi_m\rangle}{\partial c_{\mu,e}} = 0 \tag{3.62}$$

Express: $\frac{\delta\langle\Psi_e|\hat{H}|\Psi_m\rangle}{\delta c_{\mu,e}}$

Recognize a dependence of e, the derivative:

$$\frac{\partial\ \langle\Psi_e|\,\hat{H}\,|\Psi_m\rangle}{\partial c_{\mu,e}} = 2\sqrt{2}\left(h_{\mu,g} + \sum_{i\neq g,e}\left(2g_{\mu,g,i,i} - g_{\mu,i,i,g}\right) + g_{\mu,g,e,e}\right) \tag{3.63}$$

Express: $\frac{\delta\langle\Psi_m|\hat{H}|\Psi_e\rangle}{\delta c_{\mu,e}}$

Use the Hermitish property:

$$\frac{\partial\ \langle\Psi_m|\,\hat{H}\,|\Psi_e\rangle}{\partial c_{\mu,e}} = \frac{\partial\ \langle\Psi_e|\,\hat{H}\,|\Psi_m\rangle}{\partial c_{\mu,e}} \tag{3.64}$$

3.4 COVO Gradient Equation

Now that we have expressed the derivative for each Hamiltonian matrix element, we can express the full gradient of the energy expectation value with respect to the MO coefficients of the virtual orbital, $c_{\mu,e}$.

Vi burde tage højde for at de virutal coefficients indgår i CI coefficients m and e...

Matrix Representation Collect the derivatives while assuming everything is real, arrive at the expression for the gradient:

$$\begin{aligned}\frac{\delta \langle \Phi_g | \hat{H} | \Phi_g \rangle}{\delta c_{\mu,e}} &= C_e^2 \left[2 \left(2h_{\mu,e} + 2 \sum_{i \neq g,e} (2\ g_{\mu,e,i,i} - g_{\mu,i,i,e}) + g_{\mu,e,e,e} \right) \right] \\ &\quad + C_m^2 \left[2 \left(h_{\mu,e} + \sum_{i \neq g,e} (2\ g_{\mu,e,i,i} - g_{\mu,i,i,e}) + g_{g,g,\mu,e} + g_{\mu,g,e,g} \right) \right] \\ &\quad + 2C_g C_e \left[2\ g_{g,\mu,g,e} \right] \\ &\quad + 2C_e C_m \left[2\sqrt{2} \left(h_{g,\mu} + 2 \sum_{i \neq g,e} (2g_{g,\mu,i,i} - g_{g,i,i,\mu}) + g_{\mu,g,e,e} \right) \right] \\ &= 0 \end{aligned} \tag{3.65}$$

This can be expressed in matrix form as:

$$\begin{bmatrix} C_e^2 & C_m^2 & 2C_gC_e & 2C_eC_m \end{bmatrix} \begin{bmatrix} 2\left(2h_{\mu,e} + 2\sum_{i\neq g,e}(2g_{\mu,e,i,i} - g_{\mu,i,i,e}) + g_{\mu,e,e,e}\right) \\ 2\left(h_{\mu,e} + \sum_{i\neq g,e}(2g_{\mu,e,i,i} - g_{\mu,i,i,e}) + g_{g,g,\mu,e} + g_{\mu,g,e,g}\right) \\ 2g_{\mu,g,e,g} \\ 2\sqrt{2}\left(h_{g,\mu} + 2\sum_{i\neq g,e}(2g_{g,\mu,i,i} - g_{g,i,i,\mu}) + g_{g,\mu,e,e}\right) \end{bmatrix} = 0 \tag{3.66}$$

Incorporating substituting MOs to AOs, such that $|e\rangle = \sum_\mu c_{\mu,e} |\chi_\mu\rangle$, we arrive at the matrix equation for the COVO gradient:

$$\left[C_e^2 \mathbf{A} + C_m^2 \mathbf{B} + 2C_gC_e \mathbf{C} + 2C_eC_m \mathbf{D} \right] \vec{c}_e = 0 \tag{3.67}$$

where the matrix elements are:

$$A_{\mu,\mu'} = 2 \left(2h_{\mu,\mu'} + 2 \sum_{i \neq g,e} (2g_{\mu,\mu',i,i} - g_{\mu,i,i,\mu'}) + \sum_{\rho,\sigma} c_{\rho,e} c_{\sigma,e} g_{\mu,\rho,\sigma,\mu'} \right) \tag{3.68}$$

$$B_{\mu,\mu'} = 2 \left(h_{\mu,\mu'} + \sum_{i \neq g,e} (2g_{\mu,\mu',i,i} - g_{\mu,i,i,\mu'}) + g_{g,g,\mu,\mu'} + g_{\mu,g,\mu',g} \right) \tag{3.69}$$

$$C_{\mu,\mu'} = 2g_{\mu,g,\mu',g} \tag{3.70}$$

$$D_{\mu,\mu'} = 2\sqrt{2} \left(h_{g,\mu} + 2 \sum_{i \neq g,e} (2g_{g,\mu,i,i} - g_{g,i,i,\mu}) + \sum_{\rho} c_{\rho,e} g_{g,\mu,\mu',\rho} \right) \tag{3.71}$$

We solve this matrix equation iteratively for the coefficients of the virtual orbital, $\vec{c}_e$, until convergence is reached, make use of an initial guess for $\vec{c}_e$. For which we employ a self-consistent field (SCF) like method, utilizing we can keep the states orthogonal during the optimization.

4 Implementation of Configuration Interaction (CI) Matrix Elements

In this section, we detail the configuration interaction (CI) matrix elements relevant to the COVO method, calculated in python using PySCF and SlowQuant. These matrix elements play a crucial role in capturing the electron correlation effects that the COVO method aims to address, we verify their accuracy through matching with HF results. The CI matrix elements are derived from the Hamiltonian operator acting on the various electronic configurations as presented in earlier sections, derived in the COVO framework. We present the explicit forms of these matrix elements, along with the initial steps in their derivations, and implications for the COVO optimization process. For the Python implementation see appendix C.

4.1 System Setup

Using the water molecule as a case study, we detail the molecules' geometry, use the STO-3G basis set, and define the units in angstroms. The water molecule is set up in PySCF as follows:

```
# PySCF molecular setup
mol = pyscf.M(atom=atom_coordinates, basis="sto3g", unit="angstrom")
rhf = pyscf.scf.RHF(mol).run()
```

here it is detailed that we use restricted Hartree-Fock (RHF) as the starting point for our calculations. Runs to an SCF energy convergence of 10^{-8} Hartree, at -74.36274868 Hartree.

Unitary Product State

SlowQuant Integration The wavefunction is initialized using SlowQuant unitary coupled cluster, `WaveFunctionUPS()` [6]. It takes the RHF wavefunction as a reference for number of electrons, `mol.nelectron`, and the MO coefficients, `rhf.mo_coeff`. Along with a defined active space, that has 2 electrons over 2 orbitals as $(2, 2)$, in preparation for COVO. The one- and two-electron integrals are extracted from the PySCF RHF object, `mol.intor()`, for use in SlowQuant:

```
# SlowQuant wavefunction initialization
WF = WaveFunctionUPS(mol.nelectron, active_space, rhf.mo_coeff,
    one_electron_integrals, two_electron_integrals, "fUCCSD")
```

here "fUCCSD" indicates the use of fermionic UCC with single and double excitations.

SlowQuant enables the construction of the CI Hamiltonian matrix using the defined wavefunction. The Hamiltonian is built using the `hamiltonian_0i_0a()` function:

```
# Electronic Hamiltonian
H = hamiltonian_0i_0a(WF.h_mo, WF.g_mo, WF.num_inactive_orbs,
                      WF.num_active_orbs)
```

here `WF.h_mo` and `WF.g_mo` are the one- and two-electron integrals in the MO basis.

SlowQuant provides a set of predefined fermionic operators that can be used to construct the CI basis. For our COVO implementation, we utilize the single excitation `G1_sa`, and double excitation operators `G2_sa`:

```
def create_excitation_operators(occupied_orbital, virtual_orbital):
    # Single excitation: promotes ONE electron from occupied to virtual
        orbital
    single_excitation = G1_sa(
        i=occupied_orbital,      # electron removed from this orbital
        a=virtual_orbital,       # electron added to this orbital
        return_anti_hermitian=False
    )

    # Double excitation: promotes BOTH electrons from occupied to virtual
        orbital
    double_excitation = G2_sa(
        i=occupied_orbital,      # remove electron from orbital i (spin up)
        j=occupied_orbital,      # remove electron from orbital i (spin down)
        a=virtual_orbital,       # add electron to orbital a (spin up)
        b=virtual_orbital,       # add electron to orbital a (spin down)
        case=1,                  # specific case for G2_sa function
        return_anti_hermitian=False
    )
```

Enabling the construction of the single and double excitation operators,

```
single_exc, double_exc = create_excitation_operators(occupied_orbital=4,
    virtual_orbital=5)
```

needed to form the CI basis states.

The HF-CI matrix elements are computed using SlowQuant's `propagate_state()`,

```
# Apply Hamiltonian and excitation operator to HF reference state
    ket_state = propagate_state(
        [H, operator_j],            # Apply H and operator_j sequentially
        WF.csf_coeffs,              # Starting from HF reference state
        WF.ci_info,                 # CI configuration info
        WF.thetas,                  # UCC parameters
        WF.ups_layout,              # Wavefunction structure
    )
```

and `expectation_value()` function,

```
matrix_element = expectation_value(
            bra=WF.csf_coeffs,
            operators=[operator_i.dagger],
            ket=ket_state,
            ci_info=WF.ci_info,
            thetas=WF.thetas,
            wf_struct=WF.ups_layout,
        )
```

which builds the expectation value matrix of the Hamiltonian between different electronic configurations. Followed up by adding in the nuclear repulsion energy, `mol.energy_nuc()`, to the diagonal elements of the CI matrix.

```
# Matrix elements computed from SlowQuant
H_CI = [[-7.43627487e+01  2.07207699e-01  8.12572957e-07]
 [ 2.07207699e-01 -7.41428939e+01  5.92288542e-03]
 [ 8.12572957e-07  5.92288542e-03 -7.40496696e+01]]
```

4.2 Key Results and Verification

The following presents the key results obtained from implementing the COVO method within the PySCF and SlowQuant framework.

The MO coefficients obtained from the RHF calculation are visualized as a heatmap, see Figure 5a, providing insight into the contributions of each AO to the MOs. The water molecule's MOs and their corresponding energies are depicted in Figure 5b.

We can likewise also comment on their localization, for which orbital 1 and 3 show signs of localization around the oxygen atom, while orbitals 2, 4, 5 and 6 show more delocalized/semi-localization characteristics involving the oxygen atoms (2) or also involving the hydrogen atom (4,5,6).

CI Matrix Element Calculation Manual implementation of the CI matrix elements in Python, as derived in the theory section, is performed to ensure a correctness of the found expressions. The matrix elements are computed using the one- and two-electron integrals obtained from PySCF, going from AO to MO basis.

```
# One-electron integrals
hcore_ao =mol.intor("int1e_kin") + mol.intor("int1e_nuc")
hcore_mo = np.einsum('pi,pq,qj->ij', rhf.mo_coeff, hcore_ao, rhf.mo_coeff)
# Two-electron integrals
eri_4fold_ao =mol.intor('int2e_sph', aosym=1)
eri_4fold_mo = pyscf.ao2mo.incore.full(eri_4fold_ao, rhf.mo_coeff)
```

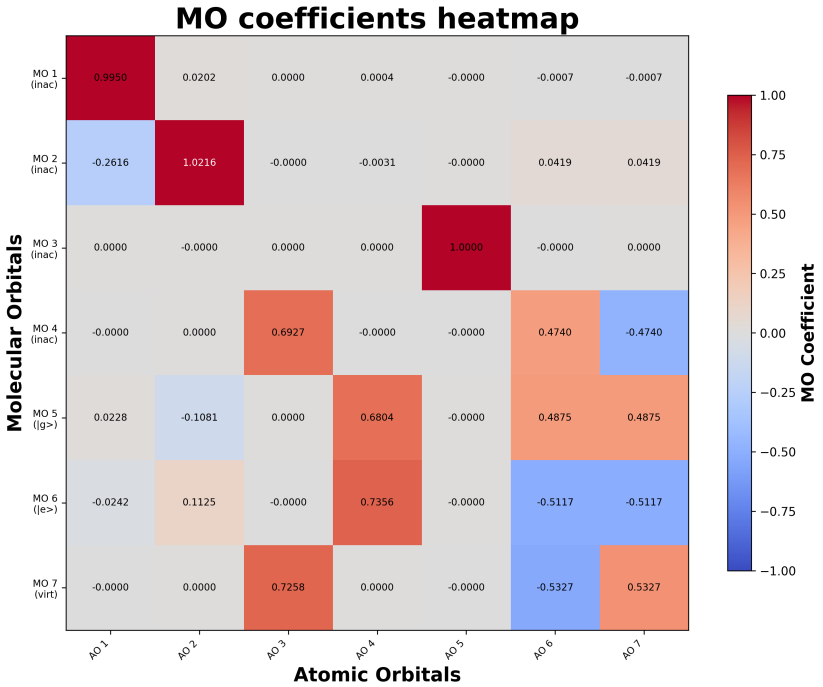

(a) The MO coefficients from the RHF calculation, visualized as a heatmap, where each row corresponds to an AO (AO) and each column to a MO (MO). The color intensity indicates the magnitude of the coefficients, highlighting the contributions of each AO to the respective MO. Equal geometry for water molecule. The values of MO coefficients should be between -1 and 1, as their absolute squares sum to 1 for each MO. Note outlier values in MO 1,2,4,5,6,7, likely due to numerical precision issues.

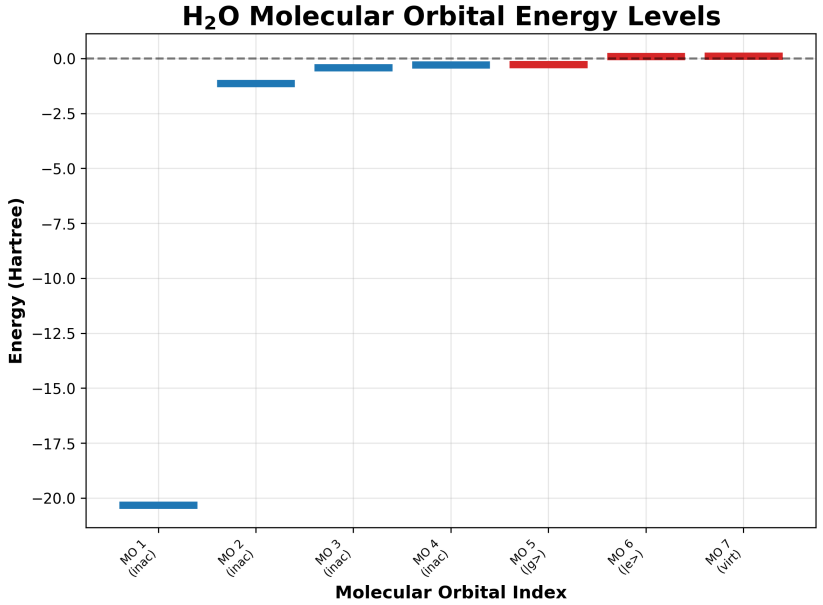

(b) MOs of the water molecule, with their corresponding energies.

Fig. 5: MO analysis of the water molecule.

here, `int1e_kin` and `int1e_nuc` are the one-electron kinetic and nuclear attraction integrals, respectively, and `int2e_sph` is the two-electron repulsion integral in spherical coordinates.

It was found all CI matrix elements matched those obtained from SlowQuant, confirming the accuracy of the derived expressions and their implementation.

An outline of the manually computed CI matrix elements is shown below:

```
# Define orbital indices
inactive_orbitals = [0, 1, 2, 3]
active_orbital = ...

# Calculate energy contributions, implementing the found expression term by
    term, adding up the contributions,
h_total += ...
J_total += ...
K_total += ...
    # collect terms, and add nuclear repulsion energy
E_e = h_total + J_total - K_total + h_nuc
```

See the full implementation in Appendix C.

Verification Verification is performed by comparing the calculated CI matrix elements with those obtained from SlowQuant HF calculations:

```
# Verify our calculation matches the CI Hamiltonian matrix element H[,]
energy_difference = np.abs(E_e - H_CI[,])
print(f"\nVerification:")
print(f"  Manual calculation: {E_e:.8f} hartree")
print(f"  CI matrix H[1,1]:   {H_CI[1, 1]:.8f} hartree")
print(f"  Absolute difference: {energy_difference:.2e}")
```

Here we demand a strict tolerance level for the comparison at $< 10^{-6}$:

```
# Check if calculation matches CI result
if energy_difference < 1e-6:
    print(f"State energy calculation verified!")
else:
    print(f"Energy calculation mismatch - may need further investigation")
```

This comparison ensures that our implementation is consistent with established quantum chemistry methods and provides a solid foundation for further exploration of the COVO method.

Diagonalize CI Hamiltonian The CI Hamiltonian matrix, is a 3x3 symmetric matrix, it is diagonalized to obtain the ground state energy and wavefunction coefficients. This is done using NumPy's linear algebra module:

```
    # Use numpy.linalg.eigh for symmetric matrices
ci_eigenvalues, ci_eigenvectors = np.linalg.eigh(H_CI)
```

The lowest eigenvalue corresponds to the ground state energy, and the associated eigenvector provides the coefficients for the CI wavefunction:

```
CI EIGENVALUES (ENERGIES)
  State 0:     -74.48740400 hartree  (Ground)
  State 1:     -74.05044868 hartree  (First excited)
  State 2:     -74.01745948 hartree  (Second excited)
```

The ground state wavefunction coefficients are extracted from the eigenvector corresponding to the lowest eigenvalue:

```
CI GROUND STATE (COEFFICIENTS)
  C_g = -0.85687 (weight:  73.4%)
  C_e = +0.51549 (weight:  26.6%)
  C_m = -0.00697 (weight:   0.0%)
```

Notice a large contribution from the ground state configuration, with a significant contribution from the excited configuration (double excitations), indicating the importance of electron-electron correlation effects captured by the COVO method.

These coefficients are then used to construct the vector seen in the matrix representation for evaluating the derivatives, as:

$$\overline{C} = \left[C_e^2, C_m^2, 2C_gC_e, 2C_eC_m\right] = \left[0.265728, 0.000049, -0.883411, -0.007189\right] \tag{4.1}$$

Orthonormality Check The orthonormality of the MOs is a crucial aspect of the COVO method. It ensures that the computed CI matrix elements are physically meaningful and that the resulting wavefunctions are properly normalized. The orthonormality check is performed by calculating the overlap matrix of the MOs and verifying that it approximates the identity matrix:

```
ao_overlap = mol.intor('int1e_ovlp')
mo_overlap = np.einsum('pi,pq,qj->ij', rhf.mo_coeff, ao_overlap, rhf.mo_coeff)
```

within a small deviation from the identity matrix in the off-diagonal elements, an acceptable tolerance at 10^{-12}. Confirming the orthonormality of the MOs used in the COVO calculations.

```
MO overlap matrix shape: (7, 7)
Expected: Identity matrix for orthonormal MOs

MO overlap matrix (first 7x7 block):
[[ 1.00e+00  5.44e-17  4.33e-34 -3.74e-19 -6.12e-18  5.42e-19 -5.4210e-20]
 [ 5.53e-17  1.00e+00  5.70e-32 -3.47e-18  0.00e+00  7.63e-17 -3.12e-17]
```

```
 [ 9.63e-35  4.93e-32  1.00e+00  2.51e-16 -3.55e-30 -1.89e-30  1.26e-17]
 [ 5.42e-20 -3.47e-18  2.51e-16  1.00e+00 -2.78e-17 -5.55e-17 -1.11e-16]
 [-7.37e-18 -6.94e-18 -3.57e-30 -2.78e-17  1.00e+00  3.89e-16 -2.78e-16]
 [ 6.07e-18  4.16e-17 -1.87e-30 -5.55e-17  4.72e-16  1.00e+00  1.67e-16]
 [ 1.08e-19 -1.39e-17  1.26e-17 -1.67e-16 -2.78e-16  1.67e-16  1.00e+00]]

Orthogonality check:
  Maximum deviation from identity: 6.66e-16
  Orthogonality PASSED: True
```

This outlines the implementation and verification of the CI matrix elements within the scope of the PREP project, using PySCF and SlowQuant.

5 Conclusion

We provided an introduction to the HF-SCF method, detailing the COVO method, along with implementing the initial steps of COVO, CI matrix, CI ground state, and derivatives coefficient vector in Python, demonstrating the expectation values lived up to anticipated values.

In my Master thesis, we will seek to explore fully implementing the COVO steps in PySCF and SlowQuant, extending this approach to larger and more complex molecules, along with exploring its integration with other quantum chemistry methods for enhanced accuracy and efficiency.

References

1. Bylaska EJ, Song D, Bauman NP, Kowalski K, Claudino D and Humble TS: Quantum Solvers for Plane-Wave Hamiltonians: Abridging Virtual Spaces Through the Optimization of Pairwise Correlations. Front. Chem. 9:603019. doi: 10.3389/fchem.2021.603019 (2021)
2. David Sherrill, C. and Henry F. Schaefer. The Configuration Interaction Method: Advances in Highly Correlated Approaches. Vol. 34. Advances in Quantum Chemistry. Academic Press, pp. 143–269. doi: 10.1016/S0065-3276(08)60532-8 (1999)
3. Szabo, A., Ostlund, N.S.: Modern Quantum Chemistry: introduction to advanced electronic structure theory. 1st edn. Dover Publications, New York (1996)
4. Helgaker, T., Jørgensen, P., Olsen, J.: Molecular Electronic-Structure Theory. 2nd edn. Wiley, Chichester; New York (2000)
5. Feliciano, G.: Materials Modelling Using Density Functional Theory: Properties and Predictions. 2nd edn. Oxford University Press (2000)
6. SlowQuant GitHub Repository, https://github.com/erikkjellgren/SlowQuant, last accessed 2023/10/25.

6 Appendix

6.1 Appendix A: Derivation of open-shell energy expectation values

Here I denote the derivation from Eq. 3.327 in Section 3.8.1 in Ref. [3], that gives the general formula for the two-electron part of the Hamiltonian, rewritten in the notation used in this thesis:

$$\frac{1}{2}\sum_{a}^{N^\alpha}\sum_{b}^{N^\alpha}\left(g_{aabb}^{\alpha\alpha}-g_{abba}^{\alpha\alpha}\right)+\frac{1}{2}\sum_{a}^{N^\beta}\sum_{b}^{N^\beta}\left(g_{aabb}^{\beta\beta}-g_{abba}^{\beta\beta}\right)+\sum_{a}^{N^\alpha}\sum_{b}^{N^\beta}g_{aabb}^{\alpha\beta} \tag{6.1}$$

Here N^α and N^β are the occupied orbitals in the α and β spins, respectively, s.t. for expectation value of $\left|\psi_m^{\alpha\beta}\right\rangle$, note that:

$$N^\alpha \in \{cs, g\} \text{ and } N^\beta \in \{cs, e\}$$

where cs is the closed-shell orbitals, g is the active orbital in α spin, and e is the virtual orbital in β spin. The closed-shell orbitals are the same for both spins. The derivation rewrites the sums to separate the closed-shell and active orbitals, and then combines terms to reach the final expression. The steps are as follows:

Derive 1. Separate the sums over all occupied orbitals into sums over closed-shell orbitals and the active orbital, where $\sum_b^{N^\beta} \to \sum_b^{cs} + \sum_b^{e^\beta}$ and $\sum_a^{N^\alpha} \to \sum_a^{cs} + \sum_a^{g^\alpha}$, e.g.

$$\sum_{a}^{N^\alpha}\sum_{b}^{N^\beta} \to \sum_{a}^{N^\alpha}\sum_{b}^{cs} + \sum_{a}^{N^\alpha}\sum_{b}^{e^\beta} \to \sum_{a}^{cs}\sum_{b}^{cs} + \sum_{a}^{g^\alpha}\sum_{b}^{cs} + \sum_{a}^{cs}\sum_{b}^{e^\beta} + \sum_{a}^{g^\alpha}\sum_{b}^{e^\beta} \tag{6.2}$$

we derive:

$$\begin{aligned}
&\frac{1}{2}\sum_{a}^{cs}\sum_{b}^{cs}\left(g_{aabb}^{\alpha\alpha}-g_{abba}^{\alpha\alpha}\right)+\frac{1}{2}\sum_{a}^{cs}\left(g_{aagg}^{\alpha\alpha}-g_{agga}^{\alpha\alpha}\right)+\frac{1}{2}\sum_{b}^{cs}\left(g_{ggbb}^{\alpha\alpha}-g_{gbbg}^{\alpha\alpha}\right)+\frac{1}{2}\left(g_{gggg}^{\alpha\alpha}-g_{gggg}^{\alpha\alpha}\right)\\
&\quad+\frac{1}{2}\sum_{a}^{cs}\sum_{b}^{cs}\left(g_{aabb}^{\beta\beta}-g_{abba}^{\beta\beta}\right)+\frac{1}{2}\sum_{a}^{cs}\left(g_{aaee}^{\beta\beta}-g_{aeea}^{\beta\beta}\right)+\frac{1}{2}\sum_{b}^{cs}\left(g_{eebb}^{\beta\beta}-g_{ebbe}^{\beta\beta}\right)+\frac{1}{2}\left(g_{eeee}^{\beta\beta}-g_{eeee}^{\beta\beta}\right)\\
&\quad+\sum_{a}^{cs}\sum_{b}^{cs}g_{aabb}^{\alpha\beta}+\sum_{a}^{cs}g_{aaee}^{\alpha\beta}+\sum_{b}^{cs}g_{ggbb}^{\alpha\beta}+g_{ggee}^{\alpha\beta}
\end{aligned} \tag{6.3}$$

Derive 2. Exclude the zeroes terms where both indices are the active orbital. Recognize that the sums over closed-shell orbitals can be combined into a single sum over all occupied orbitals excluding the active ones, dropping the spin indices, as is the case for restricted spin orbitals

$$\sum_{ij\neq g,e}\left(2g_{iijj}-g_{ijji}\right)+\sum_{i\neq g,e}\left(2g_{iigg}-g_{iggi}\right)+\sum_{i\neq g,e}\left(2g_{iiee}-g_{ieei}\right)+g_{ggee} \tag{6.4}$$

6.2 Appendix B: Derivation of the energy expectation values in water molecule

Throughout COVO we see the need to calculate expectation values of the Hamiltonian with respect to various electronic states of the water molecule. Here I denote the derivation of these expectation values, starting from the general second-quantized form of the electronic Hamiltonian.

In the restricted HF formalism, so the one-electron integrals are spin-independent, and the two-electron integrals are spin-dependent. The one-electron integrals are defined as:

$$h_{p,q} = \int d\mathbf{x}\ \chi_p^*(\mathbf{x}) \left(-\frac{1}{2}\nabla^2 - \sum_I \frac{Z_I}{|r - R_I|} \right) \chi_q(\mathbf{x}), \quad h_{p,q} = h_{q,p}^* = h_{q,p} \text{ (real orbitals)} \tag{6.5}$$

where $\mathbf{x}$ is the spatial and spin coordinates, $\chi_p(\mathbf{x})$ and $\chi_q(\mathbf{x})$ are the p-th and q-th molecular orbitals, Z_I is the charge of nucleus I, and R_I is the position of nucleus I. The two-electron integrals are defined as:

$$g_{p,q,r,s} = \int\int d\mathbf{x}_1 d\mathbf{x}_2\ \chi_p^*(\mathbf{x}_1)\chi_q(\mathbf{x}_2)\frac{1}{|r_1 - r_2|}\chi_r^*(\mathbf{x}_1)\chi_s(\mathbf{x}_2)\delta_{\sigma_p,\sigma_q}\delta_{\sigma_r,\sigma_s}, \tag{6.6}$$

$$g_{p,q,r,s} = g_{q,p,r,s} = g_{q,p,s,r} = g_{q,p,r,s} \text{ (real orbitals)} \tag{6.7}$$

lets us drop the spin orbital indices, e.g. k_{1_α} and k_{1_β}, and only use k_1, for two-electron integrals different spins are zero, e.g. $g_{k_{1_\alpha},k_{2_\beta},k_{3_\alpha},k_{4_\beta}} = 0$.

Notation follows: n is the total number of MOs, k_i is the i-th MO, $i \in \{1, 2, \ldots, n\}$ are indices over all MOs.

Express: $\langle \Psi_g | \hat{H} | \Psi_g \rangle$

Recognize $|\Psi_g\rangle$ is a closed shell state, all orbitals, k_i for $i \in \{1, 2, 3, 4, 5\}$, are fully occupied.

$$\langle \Psi_g | \hat{H} | \Psi_g \rangle = \sum_{p,q}^{n} h_{p,q}\ \langle \Psi_g | E_{p,q} | \Psi_g \rangle + \frac{1}{2}\sum_{p,q,r,s}^{n} g_{p,q,r,s}\ \langle \Psi_g | e_{p,q,r,s} | \Psi_g \rangle \tag{6.8}$$

$$= \sum_{p,q}^{n} h_{p,q}\ D_{p,q}^g + \frac{1}{2}\sum_{p,q,r,s}^{n} g_{p,q,r,s}\ D_{p,q,r,s}^g \tag{6.9}$$

The one-electron integrals:

$$\sum_{p,q}^{n} h_{p,q}\ D_{p,q}^g = \sum_{p,q}^{n} h_{p,q}\ 2\delta_{p,q} = \sum_{i,i}^{n} 2h_{i,i} = \sum_{i \neq k_6} 2h_{i,i} \tag{6.10}$$

The two-electron integrals:

$$\frac{1}{2}\sum_{p,q,r,s}^{n} g_{p,q,r,s}\ D_{p,q,r,s}^g = \sum_{p,q,r,s}^{n} g_{p,q,r,s}\ (2\delta_{p,q}\delta_{r,s} - \delta_{q,r}\delta_{p,s}) = \sum_{i,j}^{n}(2g_{i,i,j,j} - g_{i,j,j,i}) \tag{6.11}$$

Expressing the summation over occupied orbitals:

$$\begin{aligned}\sum_{i,j}^{n} g_{i,i,j,j} = g_{k_1,k_1,k_1,k_1} + g_{k_1,k_1,k_2,k_2} + g_{k_1,k_1,k_3,k_3} + g_{k_1,k_1,k_4,k_4} + g_{k_1,k_1,k_5,k_5} \\ + g_{k_2,k_2,k_1,k_1} + g_{k_2,k_2,k_2,k_2} + g_{k_2,k_2,k_3,k_3} + g_{k_2,k_2,k_4,k_4} + g_{k_2,k_2,k_5,k_5} \\ + g_{k_3,k_3,k_1,k_1} + g_{k_3,k_3,k_2,k_2} + g_{k_3,k_3,k_3,k_3} + g_{k_3,k_3,k_4,k_4} + g_{k_3,k_3,k_5,k_5} \\ + g_{k_4,k_4,k_1,k_1} + g_{k_4,k_4,k_2,k_2} + g_{k_4,k_4,k_3,k_3} + g_{k_4,k_4,k_4,k_4} + g_{k_4,k_4,k_5,k_5} \\ + g_{k_5,k_5,k_1,k_1} + g_{k_5,k_5,k_2,k_2} + g_{k_5,k_5,k_3,k_3} + g_{k_5,k_5,k_4,k_4} + g_{k_5,k_5,k_5,k_5}\end{aligned} \tag{6.12}$$

Rewrite to sums over occupied orbitals:

$$\sum_{i,j}^{n} g_{i,i,j,j} = \sum_{i,j\neq k_6} g_{i,i,j,j}, \quad \text{and} \quad \sum_{i,j}^{n} g_{i,j,j,i} = \sum_{i,j\neq k_6} g_{i,j,j,i} \tag{6.13}$$

Substitute back into the two-electron integrals:

$$\sum_{i,j}^{n} (2g_{i,i,j,j} - g_{i,j,j,i}) = \sum_{i,j\neq k_6} (2g_{i,i,j,j} - g_{i,j,j,i}) \tag{6.14}$$

Collecting the terms of one- and two-electron integrals,

$$\langle \Psi_g | \hat{H} | \Psi_g \rangle = \sum_{i\neq k_6} 2h_{i,i} + \sum_{i,j\neq k_6} (2g_{i,i,j,j} - g_{i,j,j,i}) \tag{6.15}$$

Express: $\langle \Psi_e | \hat{H} | \Psi_e \rangle$

Recognize $|\Psi_e\rangle$ is a closed shell state, all orbitals, k_i for $i \in \{1,2,3,4,6\}$, are fully occupied.

$$\langle \Psi_e | \hat{H} | \Psi_e \rangle = \sum_{p,q}^{n} h_{p,q} \ \langle \Psi_e | E_{p,q} | \Psi_e \rangle + \frac{1}{2} \sum_{p,q,r,s}^{n} g_{p,q,r,s} \ \langle \Psi_e | e_{p,q,r,s} | \Psi_e \rangle \tag{6.16}$$

$$= \sum_{p,q}^{n} h_{p,q} \ D^e_{p,q} + \frac{1}{2} \sum_{p,q,r,s}^{n} g_{p,q,r,s} \ D^e_{p,q,r,s} \tag{6.17}$$

The one-electron integrals:

$$\sum_{p,q}^{n} h_{p,q} \ D^e_{p,q} = \sum_{p,q}^{n} h_{p,q} \ 2\delta_{p,q} = \sum_{i,i}^{n} 2h_{i,i} \tag{6.18}$$

Express the summation over occupied orbitals:

$$\sum_{i,i}^{n} 2h_{i,i} = 2h_{k_1,k_1} + 2h_{k_2,k_2} + 2h_{k_3,k_3} + 2h_{k_4,k_4} + 2h_{k_6,k_6} = \sum_{i \neq k_5} 2h_{i,i} \tag{6.19}$$

rewriting to sums over occupied orbitals.

The two-electron integrals:

$$\frac{1}{2} \sum_{p,q,r,s}^{n} g_{p,q,r,s} \; D^{e}_{p,q,r,s} = \sum_{p,q,r,s}^{n} g_{p,q,r,s} \; (2\delta_{p,q}\delta_{r,s} - \delta_{q,r}\delta_{p,s}) = \sum_{i,j}^{n} (2g_{i,i,j,j} - g_{i,j,j,i}) \tag{6.20}$$

Expressing the summation over occupied orbitals, initially:

$$\begin{aligned}
\sum_{i,j}^{n} g_{i,i,j,j} = {} & g_{k_1,k_1,k_1,k_1} + g_{k_1,k_1,k_2,k_2} + g_{k_1,k_1,k_3,k_3} + g_{k_1,k_1,k_4,k_4} + g_{k_1,k_1,k_6,k_6} \\
& + g_{k_2,k_2,k_1,k_1} + g_{k_2,k_2,k_2,k_2} + g_{k_2,k_2,k_3,k_3} + g_{k_2,k_2,k_4,k_4} + g_{k_2,k_2,k_6,k_6} \\
& + g_{k_3,k_3,k_1,k_1} + g_{k_3,k_3,k_2,k_2} + g_{k_3,k_3,k_3,k_3} + g_{k_3,k_3,k_4,k_4} + g_{k_3,k_3,k_6,k_6} \\
& + g_{k_4,k_4,k_1,k_1} + g_{k_4,k_4,k_2,k_2} + g_{k_4,k_4,k_3,k_3} + g_{k_4,k_4,k_4,k_4} + g_{k_4,k_4,k_6,k_6} \\
& + g_{k_6,k_6,k_1,k_1} + g_{k_6,k_6,k_2,k_2} + g_{k_6,k_6,k_3,k_3} + g_{k_6,k_6,k_4,k_4} + g_{k_6,k_6,k_6,k_6}
\end{aligned} \tag{6.21}$$

Rewrite to sums over occupied orbitals:

$$\sum_{i,j}^{n} g_{i,i,j,j} = \sum_{i,j \neq k_5,k_6} g_{i,i,j,j} + 2 \sum_{i \neq k_5,k_6} g_{i,i,k_6,k_6} + g_{k_6,k_6,k_6,k_6} \tag{6.22}$$

Likewise for:

$$\sum_{i,j}^{n} g_{i,j,j,i} = \sum_{i,j \neq k_5,k_6} g_{i,j,j,i} + 2 \sum_{i \neq k_5,k_6} g_{k_6,j,j,k_6} + g_{k_6,k_6,k_6,k_6} \tag{6.23}$$

Substitute back into the two-electron integrals:

$$\begin{aligned}
\sum_{i,j}^{n} (2g_{i,i,j,j} - g_{i,j,j,i}) &= \sum_{i,j \neq k_5,k_6} (2g_{i,i,j,j} - g_{i,j,j,i}) + 2 \sum_{i \neq k_5,k_6} (2g_{i,i,k_6,k_6} - g_{k_6,j,j,k_6}) + (2g_{k_6,k_6,k_6,k_6} - g_{k_6,k_6,k_6,k_6}) \\
&= \sum_{i,j \neq k_5,k_6} (2g_{i,i,j,j} - g_{i,j,j,i}) + 2 \sum_{i \neq k_5} (2g_{i,i,k_6,k_6} - g_{k_6,j,j,k_6}) \\
&= \sum_{i,j \neq k_5} (2g_{i,i,j,j} - g_{i,j,j,i})
\end{aligned} \tag{6.24}$$

Collecting the terms of one- and two-electron integrals,

$$\langle \Psi_e | \hat{H} | \Psi_e \rangle = \sum_{i \neq k_5} 2h_{i,i} + \sum_{i,j \neq k_5} (2g_{i,i,j,j} - g_{i,j,j,i}) \tag{6.25}$$

Express: $\langle \Psi_m | \hat{H} | \Psi_m \rangle$

Recognize $|\Psi_d\rangle$ and $|\Psi_u\rangle$ are open shell states, two orbitals are singly occupied, $|k_5\rangle$ and $|k_6\rangle$. From the definition of $|\Psi_m\rangle$, we have:

$$\langle \Psi_m | \hat{H} | \Psi_m \rangle = \frac{1}{2} \Big(\langle \Psi_d | \hat{H} | \Psi_d \rangle + \langle \Psi_u | \hat{H} | \Psi_u \rangle - \langle \Psi_u | \hat{H} | \Psi_d \rangle - \langle \Psi_d | \hat{H} | \Psi_u \rangle \Big) \tag{6.26}$$

Express each term, starting with $\langle \Psi_d | \hat{H} | \Psi_d \rangle$:

$$\langle \Psi_d | \hat{H} | \Psi_d \rangle = \sum_{p,q}^{n} h_{p,q} \ \langle \Psi_d | E_{p,q} | \Psi_d \rangle + \frac{1}{2} \sum_{p,q,r,s}^{n} g_{p,q,r,s} \ \langle \Psi_d | e_{p,q,r,s} | \Psi_d \rangle \tag{6.27}$$

$$= \sum_{p,q}^{n} h_{p,q} \ D^d_{p,q} + \frac{1}{2} \sum_{p,q,r,s}^{n} g_{p,q,r,s} \ D^d_{p,q,r,s} \tag{6.28}$$

Tackle the one-electron term first, evaluating the closed-shell configuration and the open-shell configuration:

$$\sum_{p,q} h_{p,q} D^d_{p,q} = \sum_{i \neq k_5, k_6} 2h_{i,i} + h_{k_{5_\alpha}, k_{5_\alpha}} + h_{k_{6_\beta}, k_{6_\beta}}$$

Second, tackle the two-electron term, evaluating the closed/open-shell configuration:

$$\begin{aligned} \frac{1}{2} \sum_{p,q,r,s}^{n} g_{p,q,r,s} \ D^{d_i}_{p,q,r,s} = & \sum_{i,j \neq k_5, k_6} (2g_{i,i,j,j} - g_{i,j,j,i}) + \sum_{i \neq k_5, k_6} \left(2g_{i,i,k_{5_\alpha}, k_{5_\alpha}} - g_{i,k_{5_\alpha}, k_{5_\alpha}, i}\right) \\ & + \sum_{i \neq k_5, k_6} \left(2g_{i,i,k_{6_\beta}, k_{6_\beta}} - g_{i,k_{6_\beta}, k_{6_\beta}, i}\right) + g_{k_{5_\alpha}, k_{5_\alpha}, k_{6_\beta}, k_{6_\beta}} \end{aligned} \tag{6.29}$$

Collecting the terms of one- and two-electron integrals,

$$\begin{aligned} \langle \Psi_d | \hat{H} | \Psi_d \rangle = & \sum_{i \neq g,e} 2h_{i,i} + h_{k_{5_\alpha}, k_{5_\alpha}} + h_{k_{6_\beta}, k_{6_\beta}} + \sum_{i,j \neq g,e} (2g_{i,i,j,j} - g_{i,j,j,i}) + \sum_{i \neq k_5, k_6} \left(2g_{i,i,k_{5_\alpha}, k_{5_\alpha}} - g_{i,k_{5_\alpha}, k_{5_\alpha}, i}\right) \\ & + \sum_{i \neq k_5, k_6} \left(2g_{i,i,k_{6_\beta}, k_{6_\beta}} - g_{i,k_{6_\beta}, k_{6_\beta}, i}\right) + g_{k_{5_\alpha}, k_{5_\alpha}, k_{6_\beta}, k_{6_\beta}} \end{aligned} \tag{6.30}$$

The next term to express is $\langle \Psi_u | \hat{H} | \Psi_u \rangle$. The double occupied orbitals $k_1 = k_2 = k_3 = k_4 = \{11\}$ and single occupied $k_5 = \{01\}$, and $k_6 = \{10\}$, for which:

$$\begin{aligned} \langle \Psi_u | \hat{H} | \Psi_u \rangle &= \sum_{p,q}^{n} h_{p,q} \ \langle \Psi_u | E_{p,q} | \Psi_u \rangle + \frac{1}{2} \sum_{p,q,r,s}^{n} g_{p,q,r,s} \ \langle \Psi_u | e_{p,q,r,s} | \Psi_u \rangle \\ &= \sum_{p,q}^{n} h_{p,q} \ D^{u}_{p,q} + \frac{1}{2} \sum_{p,q,r,s}^{n} g_{p,q,r,s} \ D^{u}_{p,q,r,s} \end{aligned} \tag{6.31}$$

Tackle the one-electron term first, evaluating the closed-shell configuration and the open-shell configuration:

$$\sum_{p,q} h_{p,q} D^{d}_{p,q} = \sum_{i \neq k_5, k_6} 2h_{i,i} + h_{k_{5_\beta}, k_{5_\beta}} + h_{k_{6_\alpha}, k_{6_\alpha}}$$

Second, tackle the two-electron term, evaluating the closed/open-shell configuration:

$$\begin{aligned} \frac{1}{2} \sum_{p,q,r,s}^{n} g_{p,q,r,s} \ D^{d_i}_{p,q,r,s} = &\sum_{i,j \neq k_5, k_6} (2g_{i,i,j,j} - g_{i,j,j,i}) + \sum_{i \neq k_5, k_6} \left(2g_{i,i,k_{5_\beta}, k_{5_\beta}} - g_{i,k_{5_\beta}, k_{5_\beta}, i} \right) \\ &+ \sum_{i \neq k_5, k_6} \left(2g_{i,i,k_{6_\alpha}, k_{6_\alpha}} - g_{i,k_{6_\alpha}, k_{6_\alpha}, i} \right) + g_{k_{5_\beta}, k_{5_\beta}, k_{6_\alpha}, k_{6_\alpha}} \end{aligned} \tag{6.32}$$

Collecting the terms of one- and two-electron integrals,

$$\begin{aligned} \langle \Psi_u | \hat{H} | \Psi_u \rangle = &\sum_{i \neq g, e} 2h_{i,i} + h_{k_{5_\beta}, k_{5_\beta}} + h_{k_{6_\alpha}, k_{6_\alpha}} + \sum_{i,j \neq g, e} (2g_{i,i,j,j} - g_{i,j,j,i}) + \sum_{i \neq k_5, k_6} \left(2g_{i,i,k_{5_\beta}, k_{5_\beta}} - g_{i,k_{5_\beta}, k_{5_\beta}, i} \right) \\ &+ \sum_{i \neq k_5, k_6} \left(2g_{i,i,k_{6_\alpha}, k_{6_\alpha}} - g_{i,k_{6_\alpha}, k_{6_\alpha}, i} \right) + g_{k_{5_\beta}, k_{5_\beta}, k_{6_\alpha}, k_{6_\alpha}} \end{aligned} \tag{6.33}$$

Look at sum of the two diagonal terms, for restricted $\alpha = \beta$, then $\langle \Psi_u | \hat{H} | \Psi_u \rangle = \langle \Psi_d | \hat{H} | \Psi_d \rangle$, for which we drop the spin indices:

$$\langle \Psi_u | \hat{H} | \Psi_u \rangle + \langle \Psi_d | \hat{H} | \Psi_d \rangle = 2 \langle \Psi_u | \hat{H} | \Psi_u \rangle \tag{6.34}$$

Continue with the cross terms, $\langle \Psi_u | \hat{H} | \Psi_d \rangle$ and $\langle \Psi_d | \hat{H} | \Psi_u \rangle$:

$$\langle \Psi_u | \hat{H} | \Psi_d \rangle = \sum_{p,q}^{n} h_{p,q} \ \langle \Psi_u | E_{p,q} | \Psi_d \rangle + \frac{1}{2} \sum_{p,q,r,s}^{n} g_{p,q,r,s} \ \langle \Psi_u | e_{p,q,r,s} | \Psi_d \rangle \tag{6.35}$$

A one-electron operator cannot flip spins, $\langle \Psi_u|$ and $|\Psi_d\rangle$ are orthogonal under any one-body operator, therefore:

$$\sum_{p,q}^{n} h_{p,q} \ \langle \Psi_u| E_{p,q} |\Psi_d\rangle = 0 \tag{6.36}$$

A two-electron operator can flip spins, so despite $\langle \Psi_u|$ and $|\Psi_d\rangle$ being orthogonal, there exist a combination of two-body operators that flips the spins, from $|\Psi_d\rangle$ to $|\Psi_u\rangle$, e.g. $a^\dagger_{k_{6_\alpha}} a^\dagger_{k_{5_\beta}} a_{k_{5_\alpha}} a_{k_{6_\beta}}$, use here eq 1.4.24 in Molecular Electronic-Structure Theory by Helgaker, Jorgensen and Olsen:

$$\begin{aligned}
\langle \Psi_u| \hat{H} |\Psi_d\rangle &= \frac{1}{2} \sum_{p,q,r,s}^{n} g_{p,q,r,s} \ \langle \Psi_u| e_{p,q,r,s} |\Psi_d\rangle \\
&= \frac{1}{2} \sum_{p,q,r,s}^{n} g_{p,q,r,s} \ \langle \Psi_u| \Big(a^\dagger_{k_{6_\alpha}} a^\dagger_{k_{5_\beta}} a_{k_{5_\alpha}} a_{k_{6_\beta}} - a^\dagger_{k_{6_\alpha}} a^\dagger_{k_{5_\beta}} a_{k_{6_\beta}} a_{k_{5_\alpha}} \\
&\qquad - a^\dagger_{k_{5_\beta}} a^\dagger_{k_{6_\alpha}} a_{k_{5_\alpha}} a_{k_{6_\beta}} + a^\dagger_{k_{5_\beta}} a^\dagger_{k_{6_\alpha}} a_{k_{6_\beta}} a_{k_{5_\alpha}} \Big) |\Psi_d\rangle \\
&= \Gamma^u_{k_{6_\alpha}} \Gamma^u_{k_{5_\beta}} \Gamma^d_{k_{6_\beta}} \Gamma^d_{k_{5_\alpha}} \Big(g_{k_{6_\alpha},k_{6_\beta},k_{5_\beta},k_{5_\alpha}} - g_{k_{6_\alpha},k_{5_\alpha},k_{5_\beta},k_{6_\beta}} \Big) \\
&= -g_{k_{6_\alpha},k_{5_\alpha},k_{5_\beta},k_{6_\beta}}
\end{aligned} \tag{6.37}$$

for $g_{k_{6_\alpha},k_{6_\beta},k_{5_\beta},k_{5_\alpha}} = 0$ due to different spins.

Similarly for $\langle \Psi_d| \hat{H} |\Psi_u\rangle$, from $|\Psi_u\rangle$ to $|\Psi_d\rangle$ e.g. $a^\dagger_{k_{5_\alpha}} a^\dagger_{k_{6_\beta}} a_{k_{6_\alpha}} a_{k_{5_\beta}}$,

$$\begin{aligned}
\langle \Psi_d| \hat{H} |\Psi_u\rangle &= \frac{1}{2} \sum_{p,q,r,s}^{n} g_{p,q,r,s} \ \langle \Psi_d| e_{p,q,r,s} |\Psi_u\rangle \\
&= \frac{1}{2} \sum_{p,q,r,s}^{n} g_{p,q,r,s} \ \langle \Psi_u| a^\dagger_{k_{5_\alpha}} a^\dagger_{k_{6_\beta}} a_{k_{6_\alpha}} a_{k_{5_\beta}} - a^\dagger_{k_{5_\alpha}} a^\dagger_{k_{6_\beta}} a_{k_{5_\beta}} a_{k_{6_\alpha}} \\
&\qquad - a^\dagger_{k_{6_\beta}} a^\dagger_{k_{5_\alpha}} a_{k_{6_\alpha}} a_{k_{5_\beta}} + a^\dagger_{k_{6_\beta}} a^\dagger_{k_{5_\alpha}} a_{k_{5_\beta}} a_{k_{6_\alpha}} |\Psi_d\rangle \\
&= \Gamma^u_{k_{5_\alpha}} \Gamma^u_{k_{6_\beta}} \Gamma^d_{k_{6_\alpha}} \Gamma^d_{k_{5_\beta}} \Big(g_{k_{5_\alpha},k_{5_\beta},k_{6_\beta},k_{6_\alpha}} - g_{k_{5_\alpha},k_{6_\alpha},k_{6_\beta},k_{5_\beta}} \Big) \\
&= -g_{k_{5_\alpha},k_{6_\alpha},k_{6_\beta},k_{5_\beta}}
\end{aligned} \tag{6.38}$$

for $g_{k_{5_\alpha},k_{5_\beta},k_{6_\beta},k_{6_\alpha}} = 0$ due to different spins.

The sum of these two cross terms are, for restricted $\alpha = \beta$, then $\langle \Psi_u| \hat{H} |\Psi_d\rangle = \langle \Psi_d| \hat{H} |\Psi_u\rangle$, for which we drop the spin indices:

$$\langle \Psi_u| \hat{H} |\Psi_d\rangle + \langle \Psi_d| \hat{H} |\Psi_u\rangle = 2 \langle \Psi_u| \hat{H} |\Psi_d\rangle \tag{6.39}$$

Collecting all four terms together, we have:

$$\langle \Psi_m | \hat{H} | \Psi_m \rangle = 2 \Big(\sum_{i \neq g,e} 2h_{i,i} + h_{k_5,k_5} + h_{k_6,k_6} + \sum_{i,j \neq g,e} (2g_{i,i,j,j} - g_{i,j,j,i}) + \sum_{i \neq k_5,k_6} (2g_{i,i,k_5,k_5} - g_{i,k_5,k_5,i}) \tag{6.40}$$

$$+ \sum_{i \neq k_5,k_6} (2g_{i,i,k_6,k_6} - g_{i,k_6,k_6,i}) + g_{k_5,k_5,k_6,k_6} + g_{k_5,k_6,k_6,k_5} \Big)$$

Express: $\langle \Psi_g | \hat{H} | \Psi_e \rangle$

Recognize $|\Psi_g\rangle$ and $|\Psi_e\rangle$ are closed shell states, all orbitals are fully occupied. The one-electron operator cannot connect these two states, as it cannot change the occupation of orbitals, therefore look to the two-electron operator, here we can flip $|\Psi_e\rangle$ into $|\Psi_g\rangle$:

$$\begin{aligned}
\langle \Psi_g | \hat{H} | \Psi_e \rangle &= \frac{1}{2} \sum_{p,q,r,s}^{n} g_{p,q,r,s} \ \langle \Psi_g | e_{p,q,r,s} | \Psi_e \rangle \\
&= \frac{1}{2} \sum_{p,q,r,s}^{n} g_{p,q,r,s} \ \langle \Psi_g | \big(a^\dagger_{k_{5_\alpha}} a^\dagger_{k_{5_\beta}} a_{k_{6_\beta}} a_{k_{6_\alpha}} - a^\dagger_{k_{5_\alpha}} a^\dagger_{k_{5_\beta}} a_{k_{6_\alpha}} a_{k_{6_\beta}} \\
&\quad - a^\dagger_{k_{5_\beta}} a^\dagger_{k_{5_\alpha}} a_{k_{6_\beta}} a_{k_{6_\alpha}} + a^\dagger_{k_{5_\beta}} a^\dagger_{k_{5_\alpha}} a_{k_{6_\alpha}} a_{k_{6_\beta}} \big) | \Psi_e \rangle \\
&= \Gamma^g_{k_{5_\alpha}} \Gamma^g_{k_{5_\beta}} \Gamma^e_{k_{6_\alpha}} \Gamma^e_{k_{6_\beta}} \big(g_{k_{5_\alpha},k_{6_\alpha},k_{5_\beta},k_{6_\beta}} - g_{k_{5_\alpha},k_{6_\beta},k_{5_\beta},k_{6_\alpha}} \big) \\
&= g_{k_{5_\alpha},k_{6_\alpha},k_{5_\beta},k_{6_\beta}}
\end{aligned} \tag{6.41}$$

Express: $\langle \Psi_e | \hat{H} | \Psi_g \rangle$

Similarly to $\langle \Psi_g | \hat{H} | \Psi_e \rangle$, we can flip $|\Psi_g\rangle$ into $|\Psi_e\rangle$ by applying e.g. $a^\dagger_{k_{6_\alpha}} a^\dagger_{k_{6_\beta}} a_{k_{5_\beta}} a_{k_{5_\alpha}}$:

$$\langle \Psi_e | \hat{H} | \Psi_g \rangle = \frac{1}{2} \sum_{p,q,r,s}^{n} g_{p,q,r,s} \ \langle \Psi_e | e_{p,q,r,s} | \Psi_g \rangle \tag{6.42}$$

$$\begin{aligned}
&= \frac{1}{2} \sum_{p,q,r,s}^{n} g_{p,q,r,s} \ \langle \Psi_e | \Big(a^\dagger_{k_{6_\alpha}} a^\dagger_{k_{6_\beta}} a_{k_{5_\beta}} a_{k_{5_\alpha}} - a^\dagger_{k_{6_\alpha}} a^\dagger_{k_{6_\beta}} a_{k_{5_\alpha}} a_{k_{5_\beta}} \\
&- a^\dagger_{k_{6_\beta}} a^\dagger_{k_{6_\alpha}} a_{k_{5_\beta}} a_{k_{5_\alpha}} + a^\dagger_{k_{6_\beta}} a^\dagger_{k_{6_\alpha}} a_{k_{5_\alpha}} a_{k_{5_\beta}} \Big) | \Psi_g \rangle \\
&= \Gamma^e_{k_{6_\alpha}} \Gamma^e_{k_{6_\beta}} \Gamma^g_{k_{5_\alpha}} \Gamma^g_{k_{5_\beta}} \big(g_{k_{6_\alpha},k_{5_\alpha},k_{6_\beta},k_{5_\beta}} - g_{k_{6_\alpha},k_{5_\beta},k_{6_\beta},k_{5_\alpha}} \big) \\
&= g_{k_{6_\alpha},k_{5_\alpha},k_{6_\beta},k_{5_\beta}}
\end{aligned} \tag{6.43}$$

Notice, $\langle \Psi_e | \hat{H} | \Psi_g \rangle = \langle \Psi_g | \hat{H} | \Psi_e \rangle$, as δ_{k_6,k_5}, a property of Hermitian operators.

Express: $\langle \Psi_g | \hat{H} | \Psi_m \rangle$

Recognize $|\Psi_g\rangle$ is a closed shell state. The one-electron operator can connect these two states by applying e.g. $a^\dagger_{k_{5_\beta}} a_{k_{6_\beta}}$ to $|\Psi_d\rangle$ or $a^\dagger_{k_{5_\alpha}} a_{k_{6_\alpha}}$ to $|\Psi_u\rangle$, the one-electron operator takes on the form:

$$\begin{aligned} h_{p,q} \langle \Psi_g | E_{p,q} | \Psi_m \rangle &= \frac{1}{\sqrt{2}} h_{p,q} \big(\langle \Psi_g | a^\dagger_{k_{5_\beta}} a_{k_{6_\beta}} | \Psi_d \rangle - \langle \Psi_g | a^\dagger_{k_{5_\alpha}} a_{k_{6_\alpha}} | \Psi_u \rangle \big) \\ &= \frac{1}{\sqrt{2}} \left(\Gamma^g_{k_{5_\beta}} \Gamma^d_{k_{6_\beta}} h_{k_{5_\beta},k_{6_\beta}} - \Gamma^g_{k_{5_\alpha}} \Gamma^d_{k_{6_\alpha}} h_{k_{5_\alpha},k_{6_\alpha}} \right) \\ &= \frac{1}{\sqrt{2}} \big(h_{k_{5_\beta},k_{6_\beta}} + h_{k_{5_\alpha},k_{6_\alpha}} \big) \\ &= \sqrt{2}\ h_{k_5,k_6} \end{aligned} \tag{6.44}$$

The two-electron operator can also connect these two states by applying e.g $a^\dagger_{k_{5_\beta}} a^\dagger_{k_i} a_{k_i} a_{k_{6_\beta}}$ to $|\Psi_d\rangle$ or $a^\dagger_{k_{5_\alpha}} a^\dagger_{k_i} a_{k_i} a_{k_{6_\alpha}}$ to $|\Psi_u\rangle$ for $\delta_{k_i,1}$, therefore the two-electron operator:

$$\begin{aligned} \frac{1}{2} \sum_{p,q,r,s}^{n} g_{p,q,r,s} \langle \Psi_g | e_{p,q,r,s} | \Psi_d \rangle &= \frac{1}{2\sqrt{2}} \sum_{p,q,r,s}^{n} g_{p,q,r,s} \sum_{k_i \neq k_6} \delta_{k_i,1} \langle \Psi_g | \big(a^\dagger_{k_{5_\beta}} a^\dagger_{k_i} a_{k_i} a_{k_{6_\beta}} - a^\dagger_{k_{5_\beta}} a^\dagger_{k_i} a_{k_{6_\beta}} a_{k_i} \\ &\quad - a^\dagger_{k_i} a^\dagger_{k_{5_\beta}} a_{k_i} a_{k_{6_\beta}} + a^\dagger_{k_i} a^\dagger_{k_{5_\beta}} a_{k_{6_\beta}} a_{k_i} \big) | \Psi_d \rangle \\ &= \frac{1}{\sqrt{2}} \sum_{i \neq k_6} \delta_{k_i,1} \Gamma^g_{k_{5_\beta}} \Gamma^g_{k_i} \Gamma^d_{k_i} \Gamma^d_{k_{6_\beta}} \big(g_{k_{5_\beta},k_{6_\beta},k_i,k_i} - g_{k_{5_\beta},k_i,k_i,k_{6_\beta}} \big) \\ &= \frac{1}{\sqrt{2}} \sum_{i \neq k_5,k_6} \big(2 g_{k_{5_\beta},k_{6_\beta},k_i,k_i} - g_{k_{5_\beta},k_i,k_i,k_{6_\beta}} \big) + \frac{1}{\sqrt{2}} g_{k_{5_\beta},k_{6_\beta},k_{5_\alpha},k_{5_\alpha}} \end{aligned} \tag{6.45}$$

$$\begin{aligned} \frac{1}{2} \sum_{p,q,r,s}^{n} g_{p,q,r,s} \langle \Psi_g | e_{p,q,r,s} | \Psi_u \rangle &= \frac{1}{2\sqrt{2}} \sum_{p,q,r,s}^{n} g_{p,q,r,s} \sum_{i \neq k_6} \delta_{k_i,1} \langle \Psi_g | \big(a^\dagger_{k_{5_\alpha}} a^\dagger_{k_i} a_{k_i} a_{k_{6_\alpha}} - a^\dagger_{k_{5_\alpha}} a^\dagger_{k_i} a_{k_{6_\alpha}} a_{k_i} \\ &\quad - a^\dagger_{k_i} a^\dagger_{k_{5_\alpha}} a_{k_i} a_{k_{6_\alpha}} + a^\dagger_{k_i} a^\dagger_{k_{5_\alpha}} a_{k_{6_\alpha}} a_{k_i} \big) | \Psi_u \rangle \\ &= \frac{1}{\sqrt{2}} \sum_{i \neq k_6} \delta_{k_i,1} \Gamma^g_{k_{5_\alpha}} \Gamma^g_{k_i} \Gamma^d_{k_i} \Gamma^d_{k_{6_\alpha}} \big(g_{k_{5_\alpha},k_{6_\alpha},k_i,k_i} - g_{k_{5_\alpha},k_i,k_i,k_{6_\alpha}} \big) \\ &= -\frac{1}{\sqrt{2}} \sum_{i \neq k_5,k_6} \big(2 g_{k_{5_\alpha},k_{6_\alpha},k_i,k_i} - g_{k_{5_\alpha},k_i,k_i,k_{6_\alpha}} \big) - \frac{1}{\sqrt{2}} g_{k_{5_\alpha},k_{6_\alpha},k_{5_\beta},k_{5_\beta}} \end{aligned} \tag{6.46}$$

Collect the terms to express the full element:

$$\langle \Psi_g | \hat{H} | \Psi_m \rangle = \sqrt{2} \left(h_{k_5,k_6} + \sum_{i \neq k_5,k_6} \big(2 g_{k_5,k_6,k_i,k_i} - g_{k_5,k_i,k_i,k_6} \big) + g_{k_5,k_6,k_5,k_5} \right) \tag{6.47}$$

Express: $\langle \Psi_m | \hat{H} | \Psi_g \rangle$

Continue off the previous, now switched, the one-electron operator can connect these two states by applying e.g. $a^\dagger_{k_{6_\beta}} a_{k_{5_\beta}}$ to $|\Psi_g\rangle$ equates to $|\Psi_d\rangle$ or $a^\dagger_{k_{6_\alpha}} a_{k_{5_\alpha}}$ to $|\Psi_g\rangle$ equates to $|\Psi_u\rangle$, the one-electron operator takes on the form:

$$\begin{aligned} h_{p,q} \langle \Psi_m | E_{p,q} | \Psi_g \rangle &= \frac{1}{\sqrt{2}} h_{p,q} \big(\langle \Psi_g | a^\dagger_{k_{6_\beta}} a_{k_{5_\beta}} | \Psi_d \rangle - \langle \Psi_g | a^\dagger_{k_{6_\alpha}} a_{k_{5_\alpha}} | \Psi_u \rangle \big) \\ &= \frac{1}{\sqrt{2}} \left(\Gamma^g_{k_{6_\beta}} \Gamma^d_{k_{5_\beta}} h_{k_{6_\beta},k_{5_\beta}} - \Gamma^g_{k_{6_\alpha}} \Gamma^d_{k_{5_\alpha}} h_{k_{6_\alpha},k_{5_\alpha}} \right) \\ &= \frac{1}{\sqrt{2}} \big(h_{k_{6_\beta},k_{5_\beta}} + h_{k_{6_\alpha},k_{5_\alpha}} \big) \\ &= \sqrt{2}\ h_{k_6,k_5} \end{aligned} \tag{6.48}$$

For which we notice the similarity to $\langle \Psi_g | \hat{H} | \Psi_m \rangle$, for $h_{k_6,k_5} = h_{k_5,k_6}$, s.t. the one-electron and two-electron operator can connect these two states in the same way, a property ensured by the Hermitish Hamiltonian:

$$\langle \Psi_m | \hat{H} | \Psi_g \rangle = \langle \Psi_g | \hat{H} | \Psi_m \rangle \tag{6.49}$$

Express: $\langle \Psi_e | \hat{H} | \Psi_m \rangle$

Recognize $|\Psi_e\rangle$ is a closed shell state. Differentiate between $|\Psi_e\rangle$ and $|\Psi_m\rangle$ by the occupation of the highest occupied molecular orbital, k_6 in $|\Psi_e\rangle$ and k_5 and k_6 single occupied in $|\Psi_m\rangle$. This means that the one-electron operator can connect these two states by applying $a^\dagger_{k_{6_\alpha}} a_{k_{5_\alpha}}$ to $|\Psi_d\rangle$ or $a^\dagger_{k_{6_\beta}} a_{k_{5_\beta}}$ to $|\Psi_u\rangle$, the one-electron operator takes on the form:

$$\begin{aligned} h_{p,q} \langle \Psi_e | E_{p,q} | \Psi_m \rangle &= \frac{1}{\sqrt{2}} h_{p,q} \big(\langle \Psi_e | a^\dagger_{k_{6_\alpha}} a_{k_{5_\alpha}} | \Psi_d \rangle - \langle \Psi_e | a^\dagger_{k_{6_\beta}} a_{k_{5_\beta}} | \Psi_u \rangle \big) \\ &= \frac{1}{\sqrt{2}} \left(\Gamma^e_{k_{6_\alpha}} \Gamma^d_{k_{5_\alpha}} h_{k_{6_\alpha},k_{5_\alpha}} - \Gamma^e_{k_{6_\beta}} \Gamma^u_{k_{5_\beta}} h_{k_{6_\beta},k_{5_\beta}} \right) \\ &= \frac{1}{\sqrt{2}} \big(h_{k_{6_\beta},k_{5_\beta}} + h_{k_{6_\alpha},k_{5_\alpha}} \big) \\ &= \sqrt{2}\ h_{k_6,k_5} \end{aligned} \tag{6.50}$$

The two-electron operator can also connect these two states by applying e.g $a^\dagger_{k_{6_\alpha}} a^\dagger_{k_i} a_{k_i} a_{k_{5_\alpha}}$ to $|\Psi_d\rangle$ or $a^\dagger_{k_{6_\beta}} a^\dagger_{k_i} a_{k_i} a_{k_{5_\beta}}$ to $|\Psi_u\rangle$ for $\delta_{k_i,1}$, therefore the two-electron operator:

$$\begin{aligned}
\frac{1}{2}\sum_{p,q,r,s}^{n} g_{p,q,r,s} \langle\Psi_e| e_{p,q,r,s} |\Psi_d\rangle &= \frac{1}{2\sqrt{2}} \sum_{p,q,r,s}^{n} g_{p,q,r,s} \sum_{k_i \neq k_5} \delta_{k_i,1} \langle\Psi_e| \big(a^\dagger_{k_{6_\alpha}} a^\dagger_{k_i} a_{k_i} a_{k_{5_\alpha}} - a^\dagger_{k_{6_\alpha}} a^\dagger_{k_i} a_{k_{5_\alpha}} a_{k_i} \\
&\quad - a^\dagger_{k_i} a^\dagger_{k_{6_\alpha}} a_{k_i} a_{k_{5_\alpha}} + a^\dagger_{k_i} a^\dagger_{k_{6_\alpha}} a_{k_{5_\alpha}} a_{k_i}\big) |\Psi_d\rangle \qquad (6.51) \\
&= \frac{1}{\sqrt{2}} \sum_{i \neq k_5} \delta_{k_i,1} \Gamma^e_{k_{6_\alpha}} \Gamma^e_{k_i} \Gamma^d_{k_i} \Gamma^d_{k_{5_\alpha}} \big(g_{k_{6_\alpha},k_{5_\alpha},k_i,k_i} - g_{k_{6_\alpha},k_i,k_i,k_{5_\alpha}}\big) \\
&= \frac{1}{\sqrt{2}} \sum_{i \neq k_5,k_6} \big(2g_{k_{6_\alpha},k_{5_\alpha},k_i,k_i} - g_{k_{6_\alpha},k_i,k_i,k_{5_\alpha}}\big) + \frac{1}{\sqrt{2}} g_{k_{6_\alpha},k_{5_\alpha},k_{6_\beta},k_{6_\beta}}
\end{aligned}$$

$$\begin{aligned}
\frac{1}{2}\sum_{p,q,r,s}^{n} g_{p,q,r,s} \langle\Psi_e| e_{p,q,r,s} |\Psi_u\rangle &= \frac{1}{2\sqrt{2}} \sum_{p,q,r,s}^{n} g_{p,q,r,s} \sum_{i \neq k_5} \delta_{k_i,1} \langle\Psi_e| \big(a^\dagger_{k_{6_\beta}} a^\dagger_{k_i} a_{k_i} a_{k_{5_\beta}} - a^\dagger_{k_{6_\beta}} a^\dagger_{k_i} a_{k_{5_\beta}} a_{k_i} \\
&\quad - a^\dagger_{k_i} a^\dagger_{k_{6_\beta}} a_{k_i} a_{k_{5_\beta}} + a^\dagger_{k_i} a^\dagger_{k_{6_\beta}} a_{k_{5_\beta}} a_{k_i}\big) |\Psi_u\rangle \qquad (6.52) \\
&= \frac{1}{\sqrt{2}} \sum_{i \neq k_5} \delta_{k_i,1} \Gamma^e_{k_{6_\beta}} \Gamma^e_{k_i} \Gamma^d_{k_i} \Gamma^d_{k_{5_\beta}} \big(g_{k_{6_\beta},k_{5_\beta},k_i,k_i} - g_{k_{6_\beta},k_i,k_i,k_{5_\beta}}\big) \\
&= -\frac{1}{\sqrt{2}} \sum_{i \neq k_5,k_6} \big(2g_{k_{6_\beta},k_{5_\beta},k_i,k_i} - g_{k_{6_\beta},k_i,k_i,k_{5_\beta}}\big) - \frac{1}{\sqrt{2}} g_{k_{6_\beta},k_{5_\beta},k_{6_\alpha},k_{6_\alpha}}
\end{aligned}$$

Collect the terms to express the full elements:

$$\langle\Psi_e| \hat{H} |\Psi_m\rangle = \sqrt{2} \left(h_{k_5,k_6} + \sum_{i \neq k_5,k_6} \big(2g_{k_6,k_5,k_i,k_i} - g_{k_6,k_i,k_i,k_5}\big) + g_{k_6,k_5,k_6,k_6}\right) \qquad (6.53)$$

Express: $\langle\Psi_m| \hat{H} |\Psi_e\rangle$

Similarly to $\langle\Psi_e| \hat{H} |\Psi_m\rangle$, the one-electron and two-electron operator can connect these two states in the same way, as stated by the Hermitish Hamiltonian:

$$\langle\Psi_m| \hat{H} |\Psi_e\rangle = \langle\Psi_e| \hat{H} |\Psi_m\rangle \qquad (6.54)$$

6.3 Appendix C: COVO Implementation Code

This appendix provides the Python code used to implement the Correlated Optimized Virtual Orbitals (COVO) method for the water molecule case study, within the scope of the PREP project. The code includes functions for constructing the configuration interaction Hamiltonian, optimizing the virtual orbitals, and analyzing the results.

Initialize imported packages:

```
import numpy as np
import pyscf

# SlowQaunt Package - HQC^2
import slowquant.SlowQuant as sq
from slowquant.unitary_coupled_cluster.ups_wavefunction import WaveFunctionUPS
from slowquant.unitary_coupled_cluster.operators import hamiltonian_0i_0a
from slowquant.unitary_coupled_cluster.fermionic_operator import
    FermionicOperator
from slowquant.unitary_coupled_cluster.operators import G1_sa, G2_sa
from slowquant.unitary_coupled_cluster.operator_state_algebra import
    expectation_value, propagate_state
```

Define molecular geometry of the water molecule:

```
atom_coordinates = """O 0.000000000000  -0.143225816552   0.000000000000;
           H 1.638036840407   1.136548822547  -0.000000000000;
           H -1.638036840407   1.136548822547  -0.000000000000"""
           # H2O molecule at equilibrium geometry
basis_set = "sto3g"     # Minimal STO-3G basis set
coordinate_unit = "angstrom"

active_space = (2, 2)  # 2 electrons in 2 active orbitals
g_orb_idx = 0          # index for |phi_g> state (relative)
e_orb_idx = 1          # index for |phi_e> state (relative)

# Create PySCF molecule object
mol = pyscf.M(atom=atom_coordinates, basis=basis_set, unit=coordinate_unit)

# Restricted Hartree-Fock (RHF) self-consistent field (SCF) calculation
rhf = pyscf.scf.RHF(mol).run()
```

Initialize Unitary Paired Spin (UPS) wavefunction for coupled cluster

```
# Calculate molecular integrals needed for UPS wavefunction
one_electron_integrals = mol.intor("int1e_kin") + mol.intor("int1e_nuc")  #
    h_pq = T_pq + V_pq
```

```
two_electron_integrals = mol.intor("int2e_sph")                          #
    g_pqrs

WF = WaveFunctionUPS(
    mol.nelectron,              # Number of electrons in the system (10 for
        H2O)
    active_space,               # Orbital space: (num_electrons, num_active) =
         (2, 2) for H2O active space
    rhf.mo_coeff,               # Molecular orbital coefficients from HF
    one_electron_integrals,     # One-electron integrals (kinetic + nuclear)
    two_electron_integrals,     # Two-electron repulsion integrals
    "fUCCSD",                   # Method: fermionic Unitary Coupled Cluster
        Singles and Doubles
)

WF.run_wf_optimization_1step(
    "SLSQP",     # Optimization method: Sequential Least Squares Programming
    False        # verbose=False (suppress detailed optimization output)
)
```

Electronic Hamiltonian in second quantization:

```
# The hamiltonian_0i_0a function builds the Hamiltonian for systems with:
# - 0 inactive orbitals (0i): all electrons are in the active space
# - 0 auxiliary orbitals (0a): no additional virtual orbitals beyond active
    space
H = hamiltonian_0i_0a(
    WF.h_mo,                    # One-electron integrals in MO basis
    WF.g_mo,                    # Two-electron integrals in MO basis
    WF.num_inactive_orbs,       # Number of doubly occupied (core) orbitals
    WF.num_active_orbs          # Number of active orbitals for CI/CC
)
```

Build Excitation Operator Pool for CI Calculation:

```
# Initialize operator pool for Configuration Interaction (CI) basis
operators = []

# Operator 1: Identity operator
identity_operator = FermionicOperator({"": 1.0})
operators.append(identity_operator)

# Function to create excitation operators between orbitals
def create_excitation_operators(occupied_orbital: int, virtual_orbital: int):
```

```
    # Single excitation:
    single_excitation = G1_sa(
        i=occupied_orbital,      # electron removed from this orbital
        a=virtual_orbital,       # electron added to this orbital
        return_anti_hermitian=False
    )

    # Double excitation:
    double_excitation = G2_sa(
        i=occupied_orbital,      # remove electron from orbital i (spin up)
        j=occupied_orbital,      # remove electron from orbital i (spin down)
        a=virtual_orbital,       # add electron to orbital a (spin up)
        b=virtual_orbital,       # add electron to orbital a (spin down)
        case=1,                  # specific case for G2_sa function
        return_anti_hermitian=False
    )

    return single_excitation, double_excitation

# Create excitation operators for H2O system
single_exc, double_exc = create_excitation_operators(occupied_orbital=4,
    virtual_orbital=5)


# Operator 2: Double excitation
operators.append(double_exc)

# Operator 3: Single excitation
operators.append(single_exc)
```

Construct Configuration Interaction (CI) Hamiltonian Matrix:

```
# Initialize CI Hamiltonian matrix
H_ci = np.zeros((len(operators), len(operators)))

# Build CI Hamiltonian matrix elements
for j, operator_j in enumerate(operators):
    print(f"  Processing column {j+1}/{len(operators)}...")

    # Step 1: Apply operator O_j and Hamiltonian to HF reference
    ket_state = propagate_state(
        [H, operator_j],            # Apply H and operator_j sequentially
        WF.csf_coeffs,              # Starting from HF reference state
```

```
        WF.ci_info,                 # CI configuration info
        WF.thetas,                  # UCC parameters
        WF.ups_layout,              # Wavefunction structure
    )

    # Step 2: Compute overlap
    for i, operator_i in enumerate(operators[j:], j):
        # Only compute upper triangle (matrix is symmetric)

        matrix_element = expectation_value(
            bra=WF.csf_coeffs,              # HF reference as bra
            operators=[operator_i.dagger],  # Apply
            ket=ket_state,                  # State from Step 1
            ci_info=WF.ci_info,
            thetas=WF.thetas,
            wf_struct=WF.ups_layout,
        )

        # Fill symmetric matrix elements
        H_ci[i,j] = H_ci[j,i] = matrix_element

# Nuclear Repulsion
nuclear_repulsion = mol.energy_nuc()
h_nuc = nuclear_repulsion

# Add Nuclear Repulsion to CI Matrix
H_CI = H_ci + np.identity(len(H_ci)) * nuclear_repulsion
```

Core Hamiltonian in Molecular Orbital Basis

```
# Step 1: Construct core Hamiltonian in atomic orbital (AO) basis
kinetic_energy_ao = mol.intor("int1e_kin")      # kinetic energy integrals
nuclear_attraction_ao = mol.intor("int1e_nuc")  # nuclear attraction integrals
hcore_ao = kinetic_energy_ao + nuclear_attraction_ao

# Step 2: Transform from AO basis to MO basis using coefficient matrix
mo_coefficients = rhf.mo_coeff
hcore_mo = np.einsum('pi,pq,qj->ij', mo_coefficients, hcore_ao,
    mo_coefficients)

# Step 3: Compute two-electron integrals in AO and transform to MO basis
eri_4fold_ao =mol.intor('int2e_sph', aosym=1)
```

```
# Transform AO integrals to MO basis using MO coefficients
eri_4fold_mo = pyscf.ao2mo.incore.full(eri_4fold_ao, rhf.mo_coeff)
```

The following are the evaluated expectation values calculated and verified:

```
# Compute Ground State Energy:
l_g = [i for i in range(WF.num_inactive_orbs + 1)]  # Active space ground
    state for H2O system

# Initialize energy components
h_total = 0       # One-electron (core) contribution
J_total = 0       # Coulomb (electron repulsion) contribution
K_total = 0       # Exchange contribution

# Calculate energy contributions using molecular orbital integrals
for i in l_g:  # Sum over occupied orbitals
    h_total += 2 * hcore_mo[i, i]

    for j in l_g:  # Double sum over occupied orbitals
        J_total += 2 * eri_4fold_mo[i, i, j, j]

        K_total += eri_4fold_mo[i, j, j, i]

# Total electronic energy of ground state
E_g = h_total + J_total - K_total + h_nuc

# Verify our calculation matches the CI Hamiltonian matrix element
energy_difference = np.abs(E_g - H_CI[0, 0])
assert energy_difference < 1e-6, "Ground state energy calculation mismatch!"
```

```
# Compute Mixed Excited State Energy
# Define orbital indices
inactive_orbitals = [0, 1, 2, 3]  # doubly occupied inactive orbitals
excited_orbital = 5               # orbital where 2 electrons are excited to

# Initialize energy components
h_total = 0       # One-electron (core) contribution
J_total = 0       # Coulomb (electron repulsion) contribution
K_total = 0       # Exchange contribution

# Term 1: One-electron energies from inactive orbitals
for i in inactive_orbitals:
    h_total += 2 * hcore_mo[i, i]  # Factor of 2 for doubly occupied
```

```
# Term 2: One-electron energy from excited orbital
h_total += 2 * hcore_mo[excited_orbital, excited_orbital]

# Term 3: Coulomb and exchange within inactive orbitals
for i in inactive_orbitals:
    for j in inactive_orbitals:
        J_total += 2 * eri_4fold_mo[i, i, j, j]
        K_total += eri_4fold_mo[i, j, j, i]

# Term 4: Coulomb and exchange interactions between inactive orbitals and
    excited orbital
for i in inactive_orbitals:
    J_total += 2 * 2 * eri_4fold_mo[i, i, excited_orbital, excited_orbital]
    K_total += 2 * eri_4fold_mo[i, excited_orbital, excited_orbital, i]

# Term 5: Self-repulsion of excited orbital
J_total += eri_4fold_mo[excited_orbital, excited_orbital, excited_orbital,
    excited_orbital]

# Total electronic energy of excited state
# Formula: E = h + J - K + nuclear_repulsion
E_e = h_total + J_total - K_total + h_nuc

# Verify our calculation matches the CI Hamiltonian matrix element H[1,1]
energy_difference = np.abs(E_e - H_CI[1, 1])
assert energy_difference < 1e-6, "Excited state energy calculation mismatch!"
```

```
# Compute Double Single Excited State Energy

# Map active space indices to full MO indices
g_orb = 4  # Lower active orbital (|g>)
e_orb = 5  # Higher active orbital (|e>)
# Get inactive orbitals [0,1,2,3]
l_inactive = [i for i in range(4)]

# Term 1:
term1 = 2 * sum(hcore_mo[i, i] for i in l_inactive)

# Term 2:
term2 = 1 * hcore_mo[g_orb, g_orb]  # g orbital has 1 electron
```

```
# Term 3:
term3 = 1 * hcore_mo[e_orb, e_orb]

#  Term 4:
for i in l_inactive:
    for j in l_inactive:
        term4 += 2 * eri_4fold_mo[i, i, j, j] - eri_4fold_mo[i, j, j, i]

# Term 5:
term5 = 0
for i in l_inactive:
    term5 += 1 * (2 * eri_4fold_mo[g_orb, g_orb, i, i] - eri_4fold_mo[g_orb, i
        , i, g_orb])

# Term 6:
term6 = 0
for i in l_inactive:
    term6 += 1 * (2 * eri_4fold_mo[e_orb, e_orb, i, i] - eri_4fold_mo[e_orb, i
        , i, e_orb])

# Term 7:
term7 = 1 * eri_4fold_mo[g_orb, g_orb, e_orb, e_orb]

# Term 8:
term8 = 1 * eri_4fold_mo[e_orb, g_orb, g_orb, e_orb]

# Term 9:
term9 = nuclear_repulsion

# Total energy using exact formula
E_m = term1 + term2 + term3 + term4 + term5 + term6 + term7 + term8 + term9

# Verify our calculation matches the CI Hamiltonian matrix element H[2,2]
energy_difference = np.abs(E_m - H_CI[2, 2])
assert energy_difference < 1e-6, "Mixed Single Excited state energy
    calculation mismatch!"
```

```
# Compute Off-Diagonal Matrix Element

# Map active space indices
g_orb = 4
e_orb = 5
```

```
# Get inactive orbitals [0,1,2,3]
l_inactive = [i for i in range(4)]

# Term 1: g_{g,e,g,e}
term1 = eri_4fold_mo[g_orb, e_orb, g_orb, e_orb]

# Total matrix element using exact formula
E_ge = term1

# Verify our calculation matches the CI Hamiltonian matrix element H[0,1]
matrix_element_difference = np.abs(E_ge - H_CI[0, 1])
assert energy_difference < 1e-6, "Mixed Single Excited state energy
    calculation mismatch!"
```

```
# Compute Off-Diagonal Matrix Element

# Map active space indices
g_orb = 4
e_orb = 5
# Get inactive orbitals [0,1,2,3]
l_inactive = [i for i in range(4)]

# Term 1:
term1 = hcore_mo[g_orb, e_orb]

# Term 2:
term2 = 0.0
for i in l_inactive:
    # Coulomb interaction: 2g_{g,e,i,i}
    coulomb_term = 2 * eri_4fold_mo[g_orb, e_orb, i, i]
    # Exchange interaction: g_{g,i,i,e}
    exchange_term = eri_4fold_mo[g_orb, i, i, e_orb]
    # Add to sum: 2(2g_{g,e,i,i} - g_{g,i,i,e})
    term2 += coulomb_term - exchange_term

# Term 3:
term3 = eri_4fold_mo[g_orb, e_orb, g_orb, e_orb]

# Sum of terms before normalization
raw_sum = term1 + term2 + term3

# Term 4:
```

```
normalization_factor = np.sqrt(2)

# Total matrix element using exact formula
E_gm = normalization_factor * raw_sum

# BRILLOUIN'S THEOREM APPLICATION:
E_gm = 0.0

# Verify our calculation matches the CI Hamiltonian matrix element H[0,2]
matrix_element_difference = np.abs(E_gm - H_CI[0, 2])
assert matrix_element_difference < 1e-6, "Off Diagonal state energy
    calculation mismatch!"
```

```
# Compute Off-Diagonal Matrix Element:

# Map active space indices
g_orb = 4
e_orb = 5

# Get inactive orbitals [0,1,2,3]
l_inactive = [i for i in range(4)]

# Term 1:
term1 = hcore_mo[e_orb, g_orb]

# Term 2:
term2 = 0.0
for i in l_inactive:
    # Coulomb interaction: 2g_{e,g,i,i}
    coulomb_term = 2 * eri_4fold_mo[e_orb, g_orb, i, i]
    # Exchange interaction: g_{e,i,i,g}
    exchange_term = eri_4fold_mo[e_orb, i, i, g_orb]
    # Add to sum: 2(2g_{e,g,i,i} - g_{e,i,i,g})
    term2 += coulomb_term - exchange_term

# Term 3:
term3 = eri_4fold_mo[e_orb, g_orb, e_orb, e_orb]

# Sum of terms before normalization
raw_sum = term1 + term2 + term3

# Term 4:
```

```
normalization_factor = np.sqrt(2)

# Total matrix element using exact formula
E_em = normalization_factor * raw_sum

# Verify our calculation matches the CI Hamiltonian matrix element H[1,2]
matrix_element_difference = np.abs(E_em - H_CI[1, 2])
assert matrix_element_difference < 1e-6, "Off Diagonal state energy
    calculation mismatch!"
```