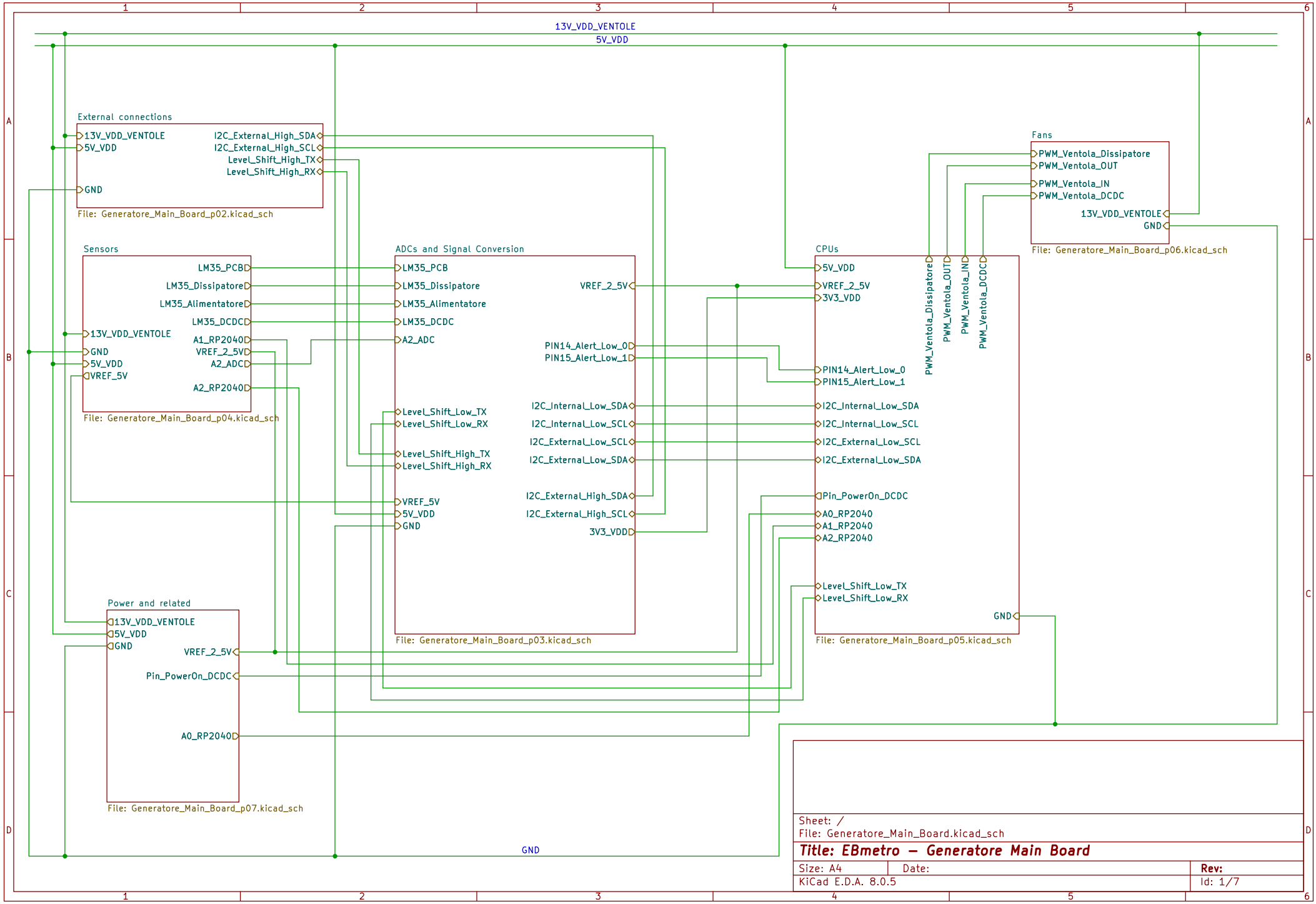

Sheet: /
File: Generatore_Main_Board.kicad_sch

Title: EBmetro – Generatore Main Board

Size: A4	Date:	Rev:
KiCad E.D.A. 8.0.5		Id: 1/7

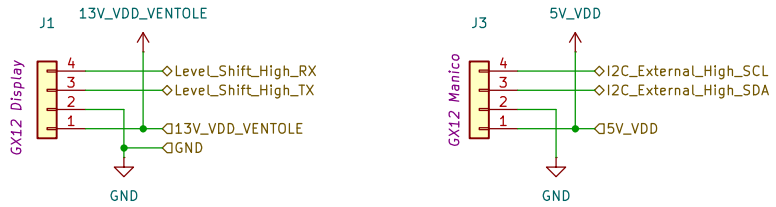

Sheet: /External connections/
File: Generatore_Main_Board_p02.kicad_sch

Title: EBmetro – Generatore Main Board

Size: A4	Date:	**Rev:**
KiCad E.D.A. 8.0.5		Id: 2/7

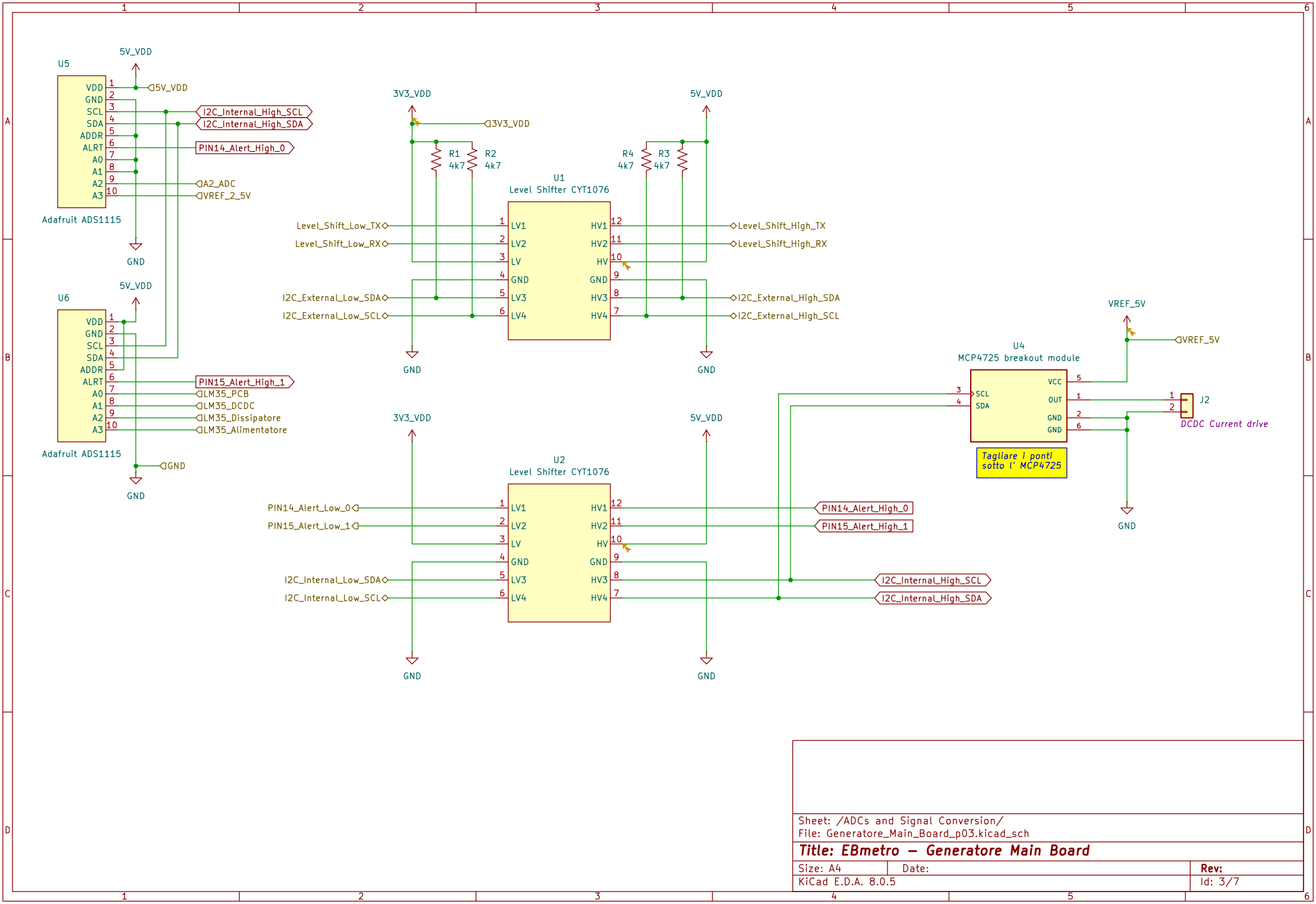

Sheet: /ADCs and Signal Conversion/
File: Generatore_Main_Board_p03.kicad_sch

Title: EBmetro – Generatore Main Board

Size: A4	Date:	Rev:
KiCad E.D.A. 8.0.5		Id: 3/7

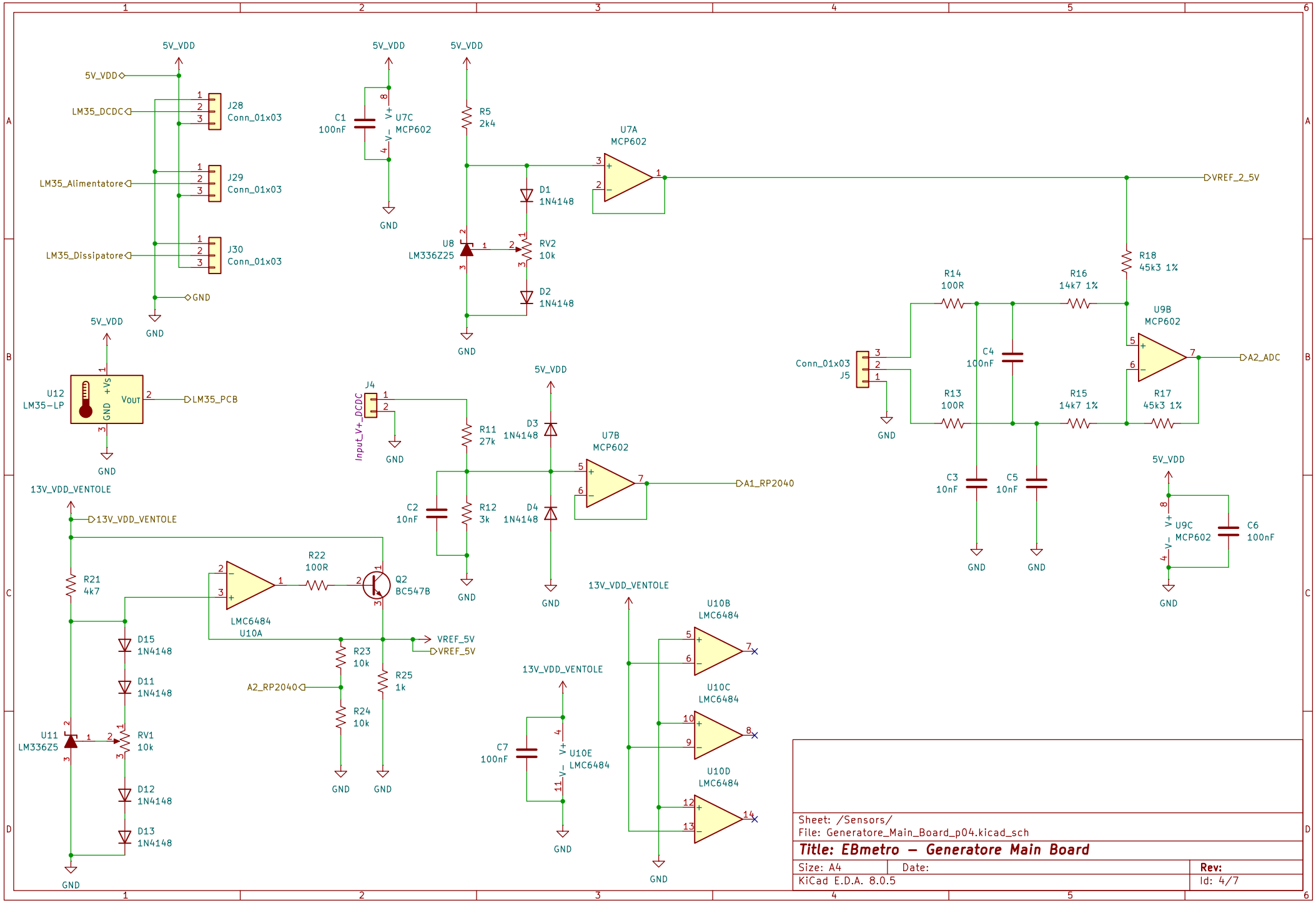

Sheet: /Sensors/
File: Generatore_Main_Board_p04.kicad_sch

Title: EBmetro – Generatore Main Board

Size: A4	Date:	Rev:
KiCad E.D.A. 8.0.5		Id: 4/7

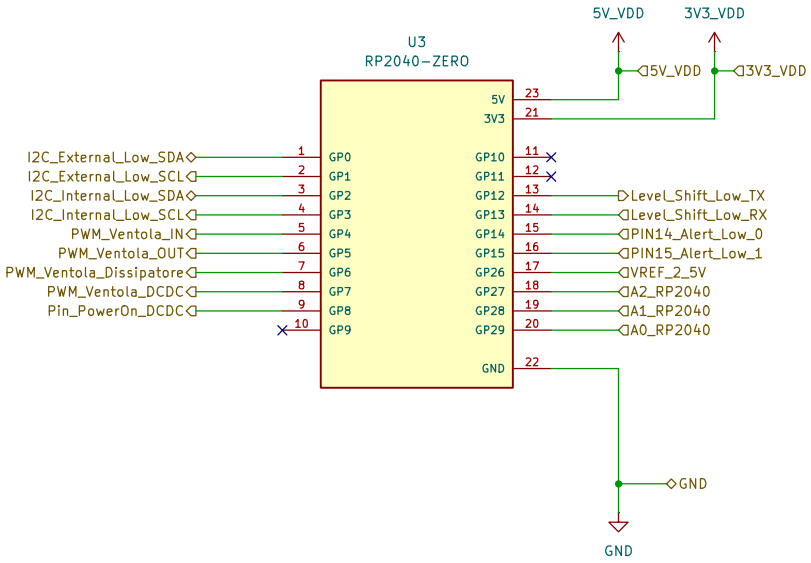

Sheet: /CPUs/
File: Generatore_Main_Board_p05.kicad_sch

Title: EBmetro – Generatore Main Board

Size: A4	Date:	Rev:
KiCad E.D.A. 8.0.5		Id: 5/7

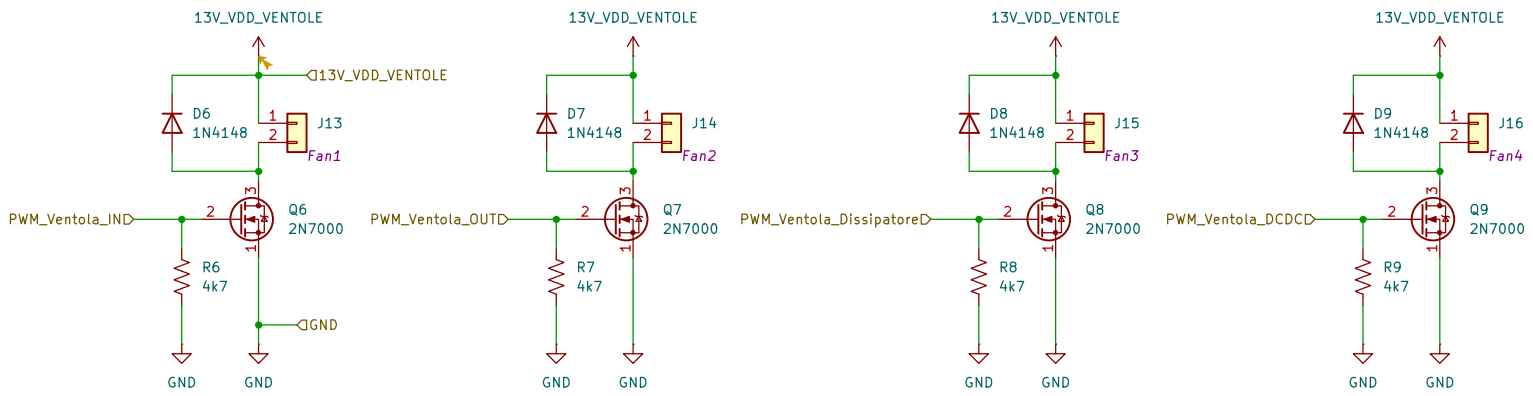

Sheet: /Fans/
File: Generatore_Main_Board_p06.kicad_sch

Title: EBmetro – Generatore Main Board

Size: A4	Date:	**Rev:**
KiCad E.D.A. 8.0.5		Id: 6/7

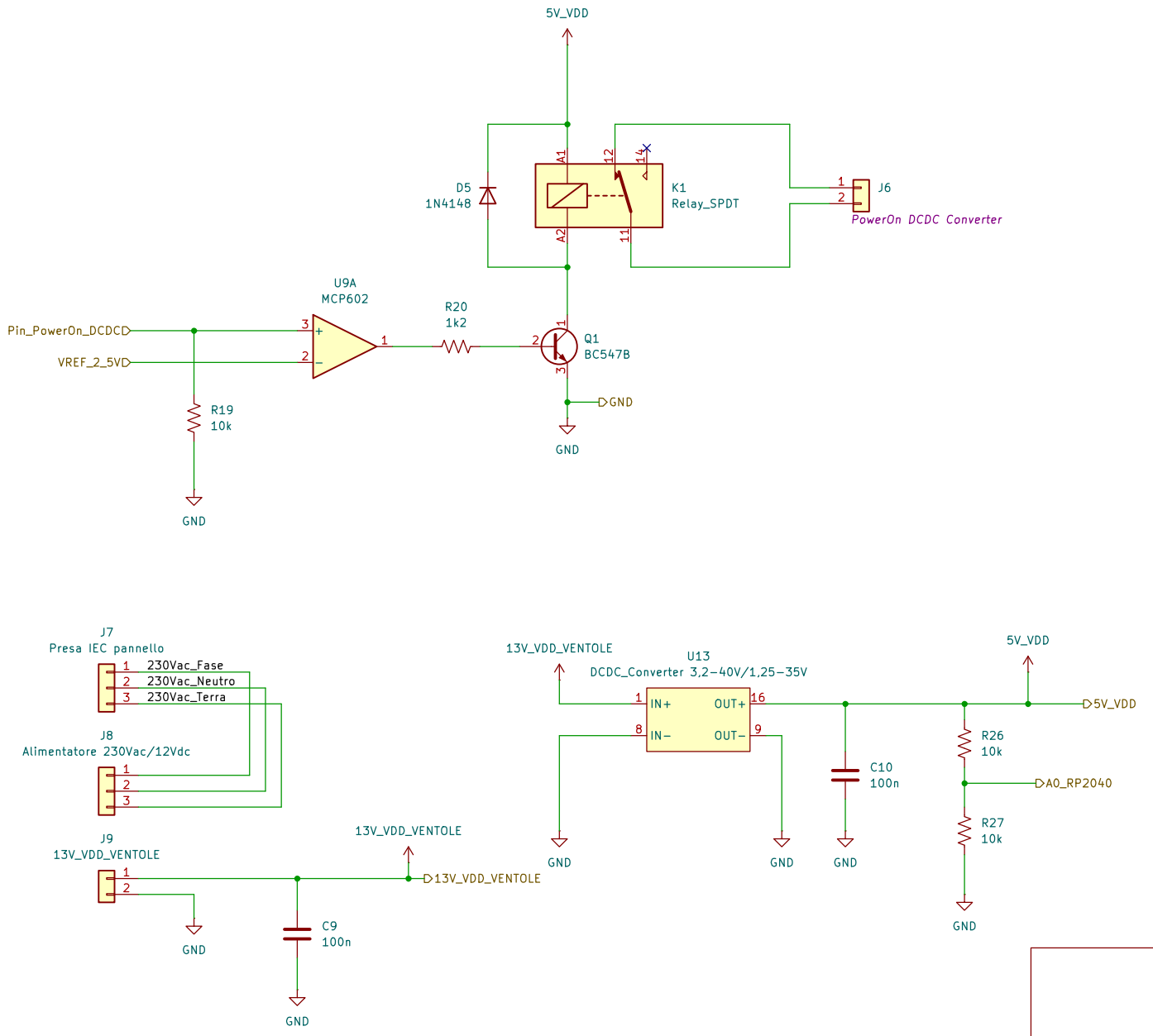

Sheet: /Power and related/
File: Generatore_Main_Board_p07.kicad_sch

Title: EBmetro – Generatore Main Board

Size: A4	Date:	Rev:
KiCad E.D.A. 8.0.5		Id: 7/7