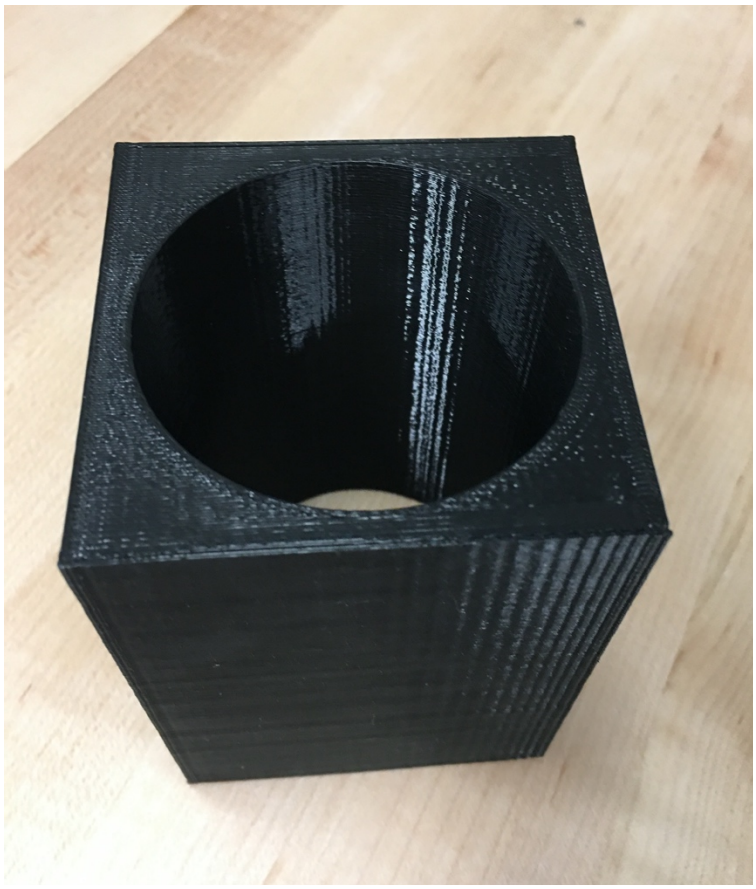

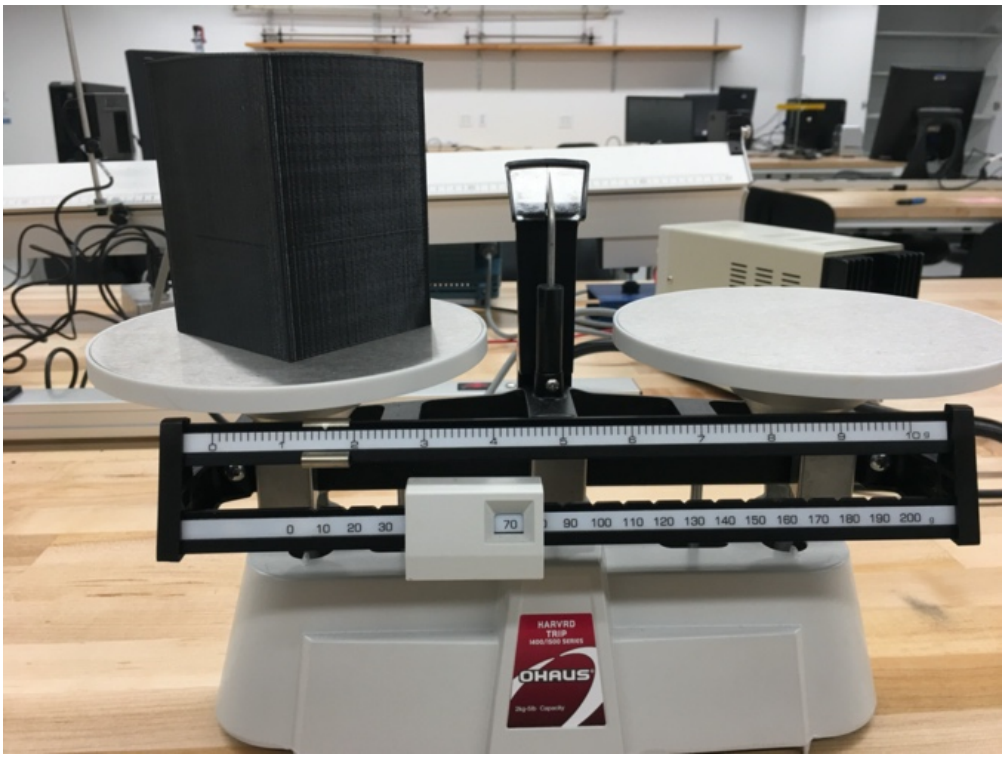
HARVRD
TRIP
OHAUS

1
2
3
4
0
10
20
30
70

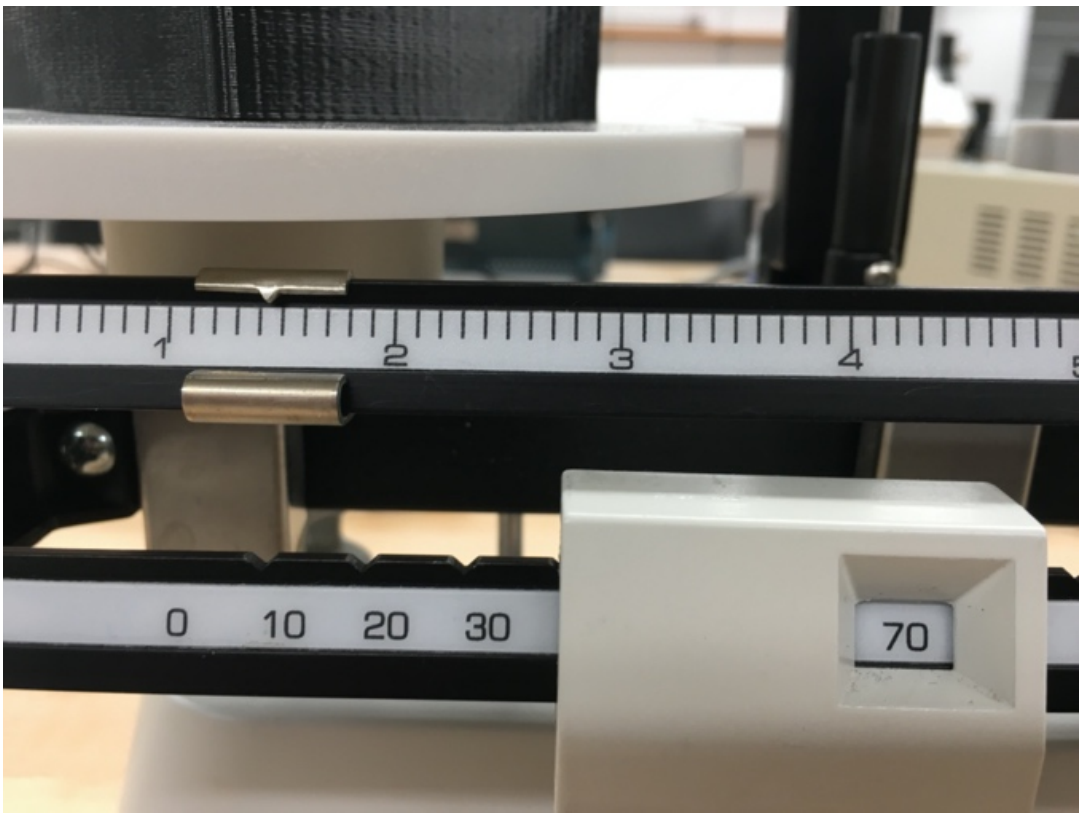
1
2
3
4
0
10
20
30
70

2
3
4
10
20
30
70

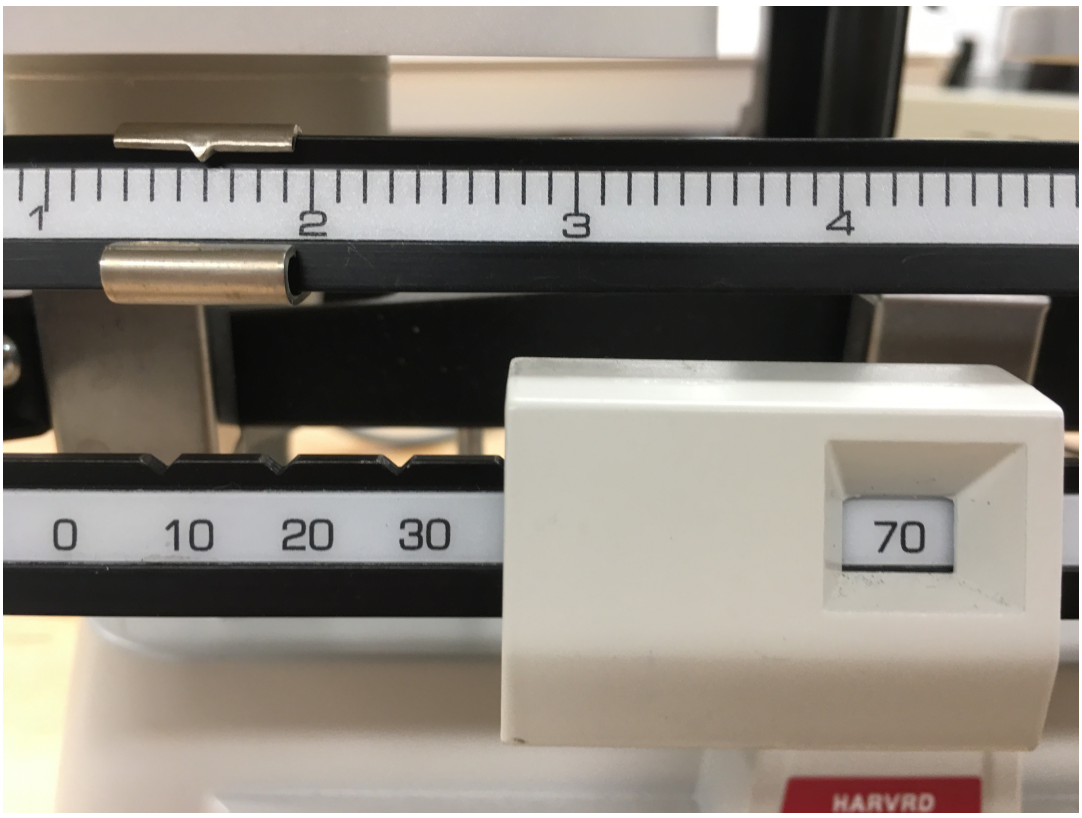
1
2
3
4
0
10
20
30
70
HARVRD

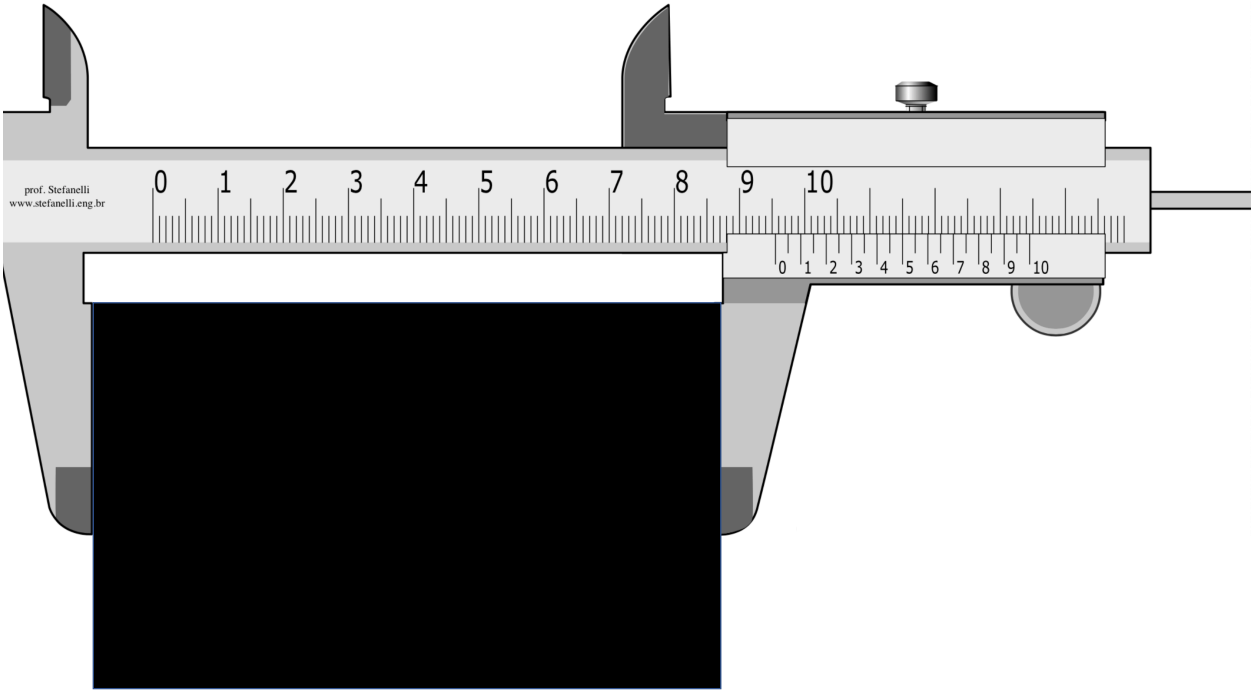
prof. Stefanelli
www.stefanelli.eng.br
0 1 2 3 4 5 6 7 8 9 10
0 1 2 3 4 5 6 7 8 9 10

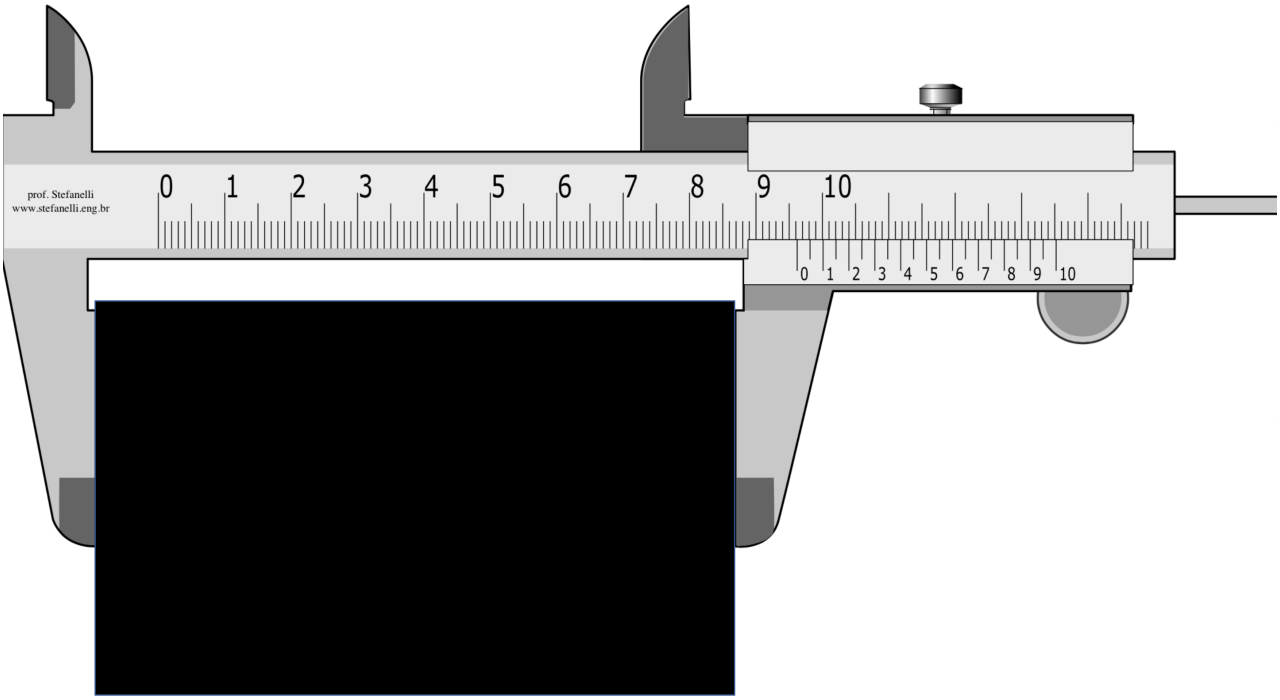
prof. Stefanelli
www.stefanelli.eng.br
0 1 2 3 4 5 6 7 8 9 10
0 1 2 3 4 5 6 7 8 9 10

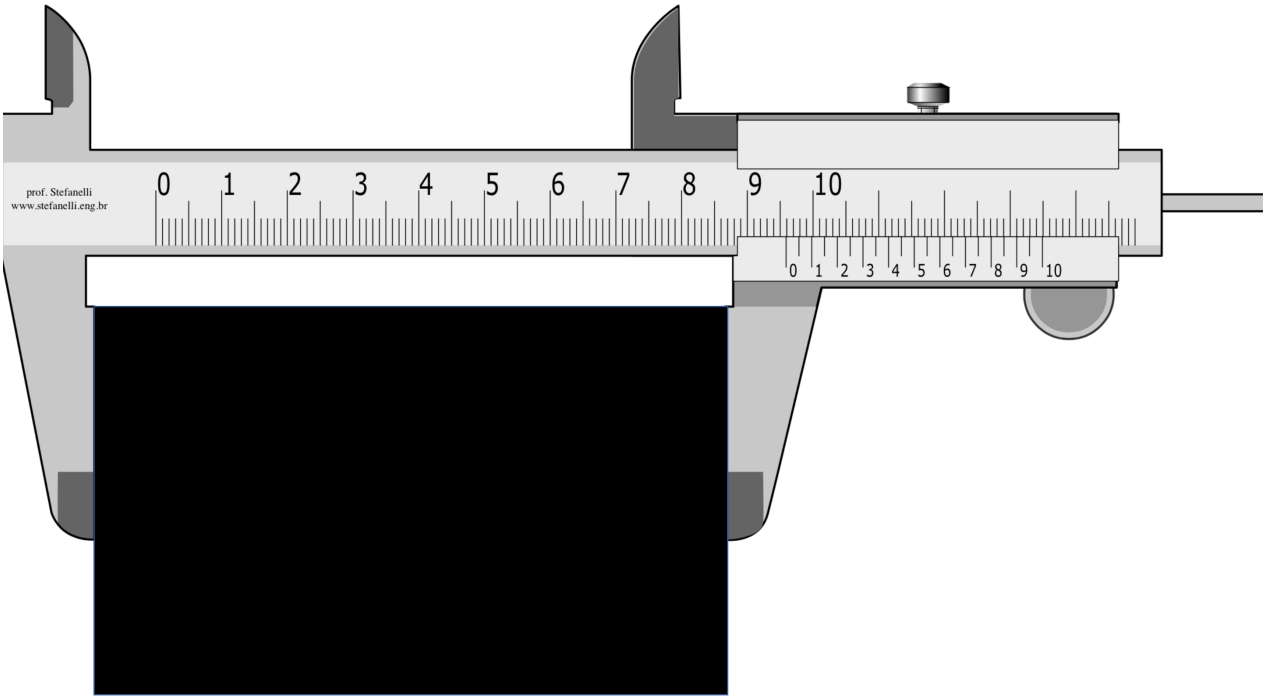
prof. Stefanelli
www.stefanelli.eng.br
0 1 2 3 4 5 6 7 8 9 10
0 1 2 3 4 5 6 7 8 9 10

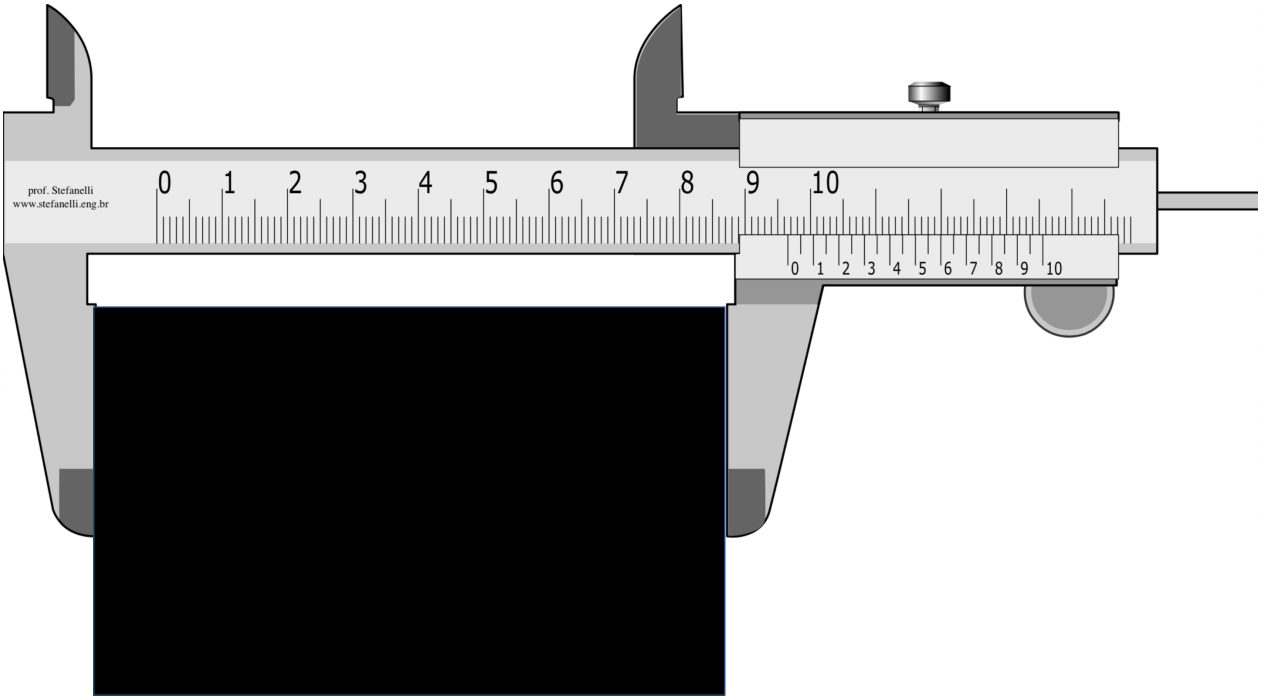
prof. Stefanelli
www.stefanelli.eng.br
0 1 2 3 4 5 6 7 8 9 10
0 1 2 3 4 5 6 7 8 9 10

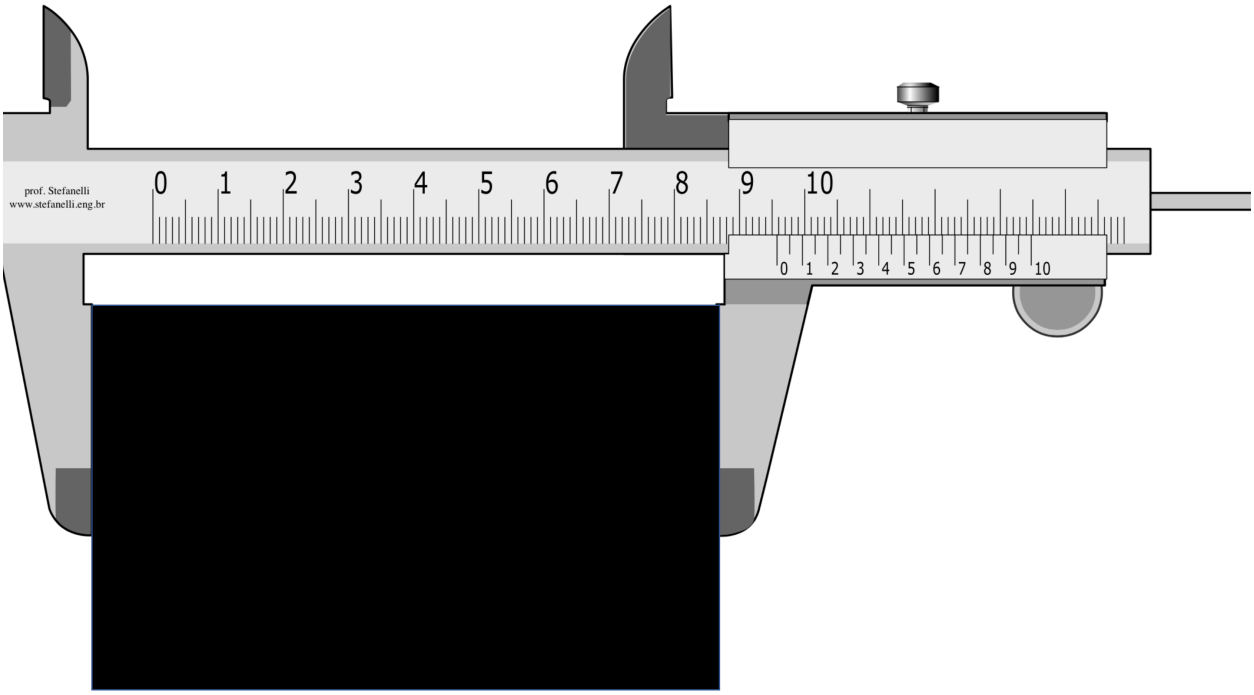
prof. Stefanelli
www.stefanelli.eng.br
0 1 2 3 4 5 6 7 8 9 10
0 1 2 3 4 5 6 7 8 9 10

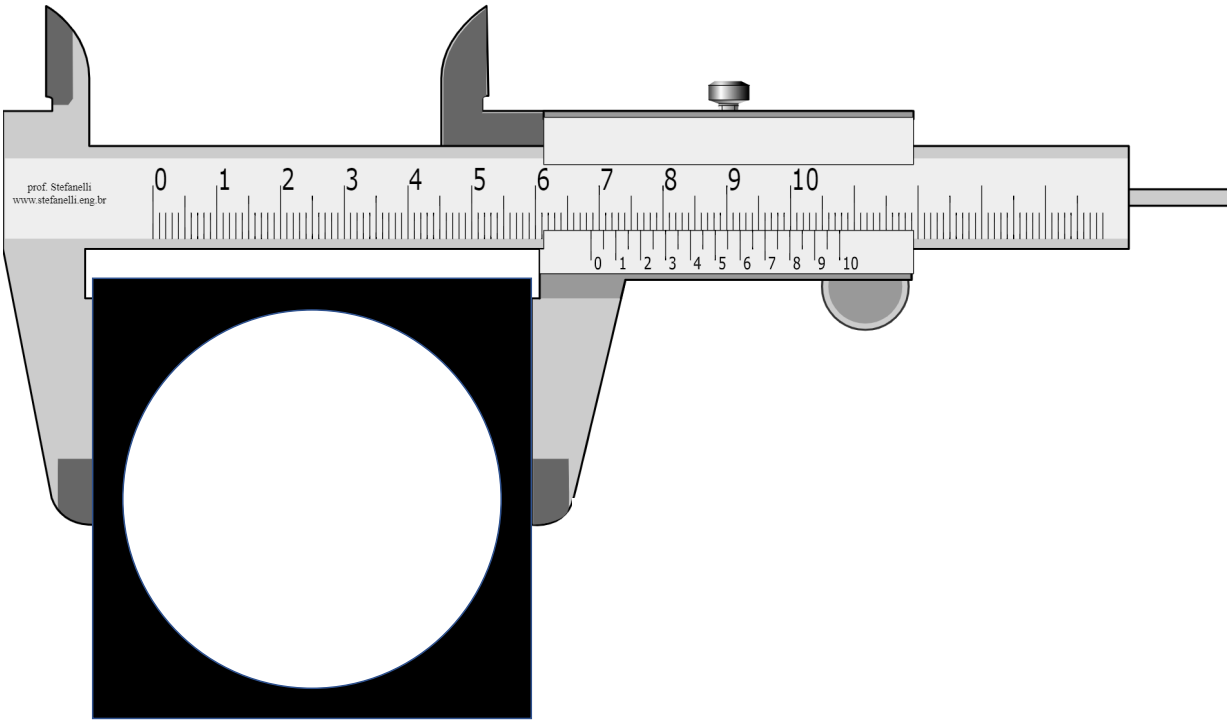
prof. Stefanelli
www.stefanelli.eng.br
0 1 2 3 4 5 6 7 8 9 10
0 1 2 3 4 5 6 7 8 9 10

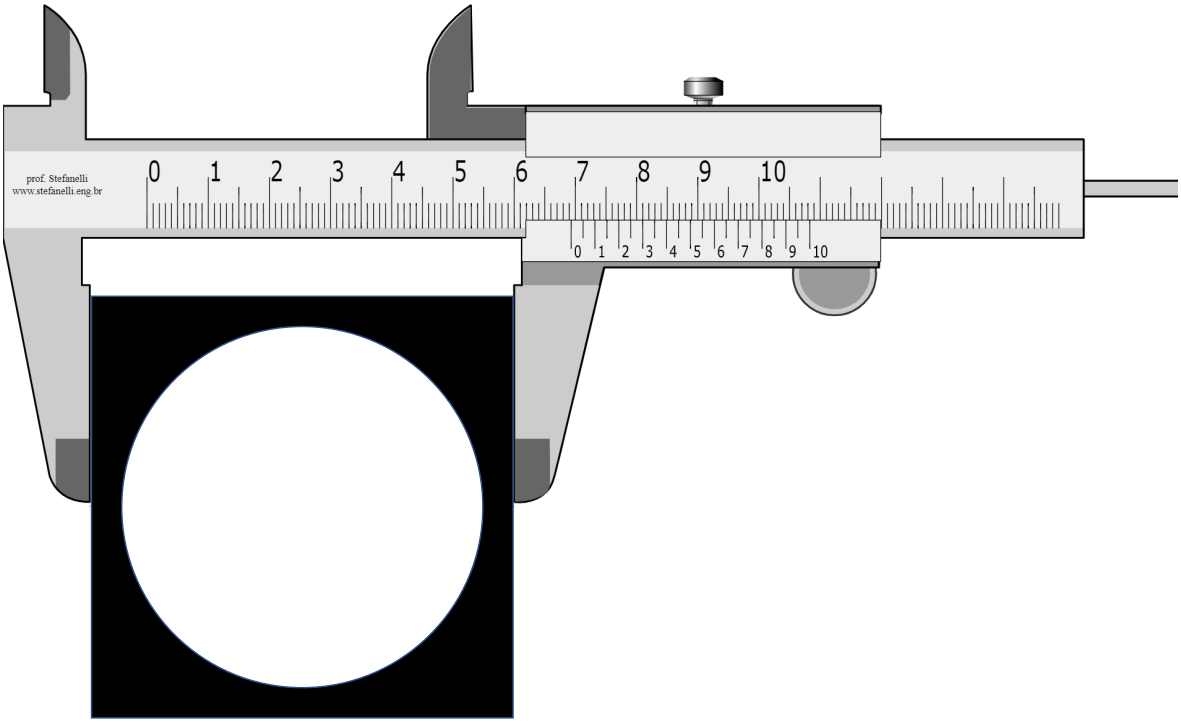
prof. Stefanelli
www.stefanelli.eng.br
0 1 2 3 4 5 6 7 8 9 10
0 1 2 3 4 5 6 7 8 9 10

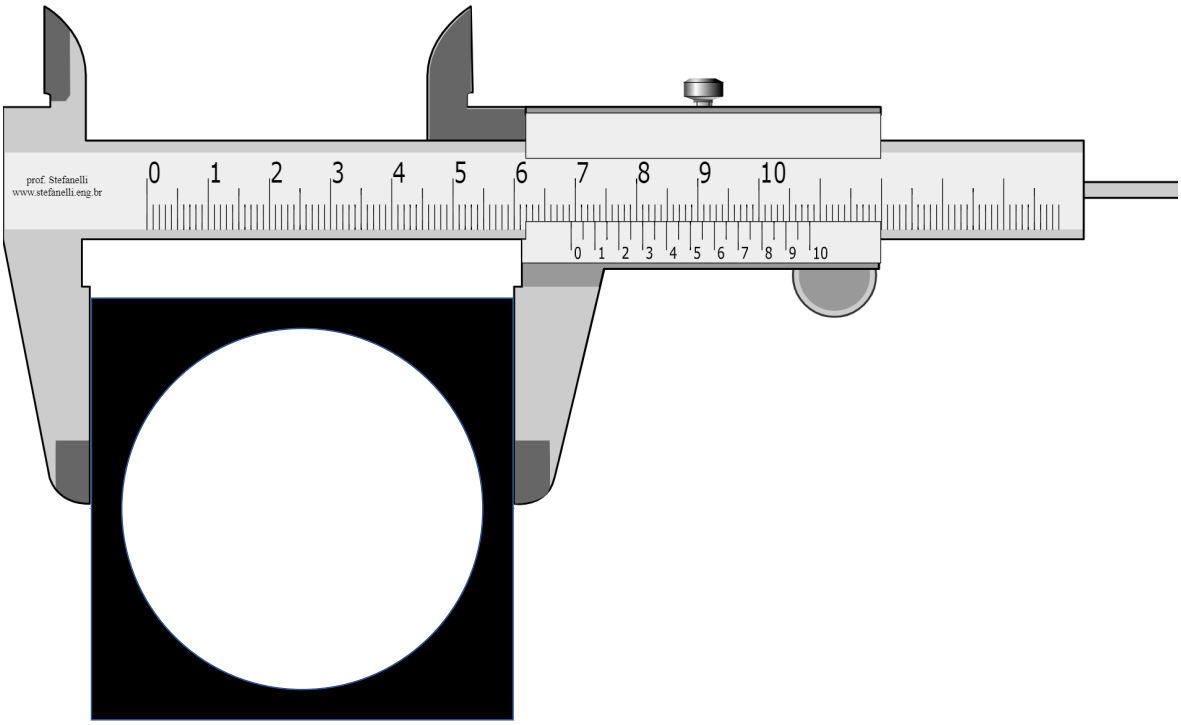
prof. Stefanelli
www.stefanelli.eng.br
0 1 2 3 4 5 6 7 8 9 10
0 1 2 3 4 5 6 7 8 9 10

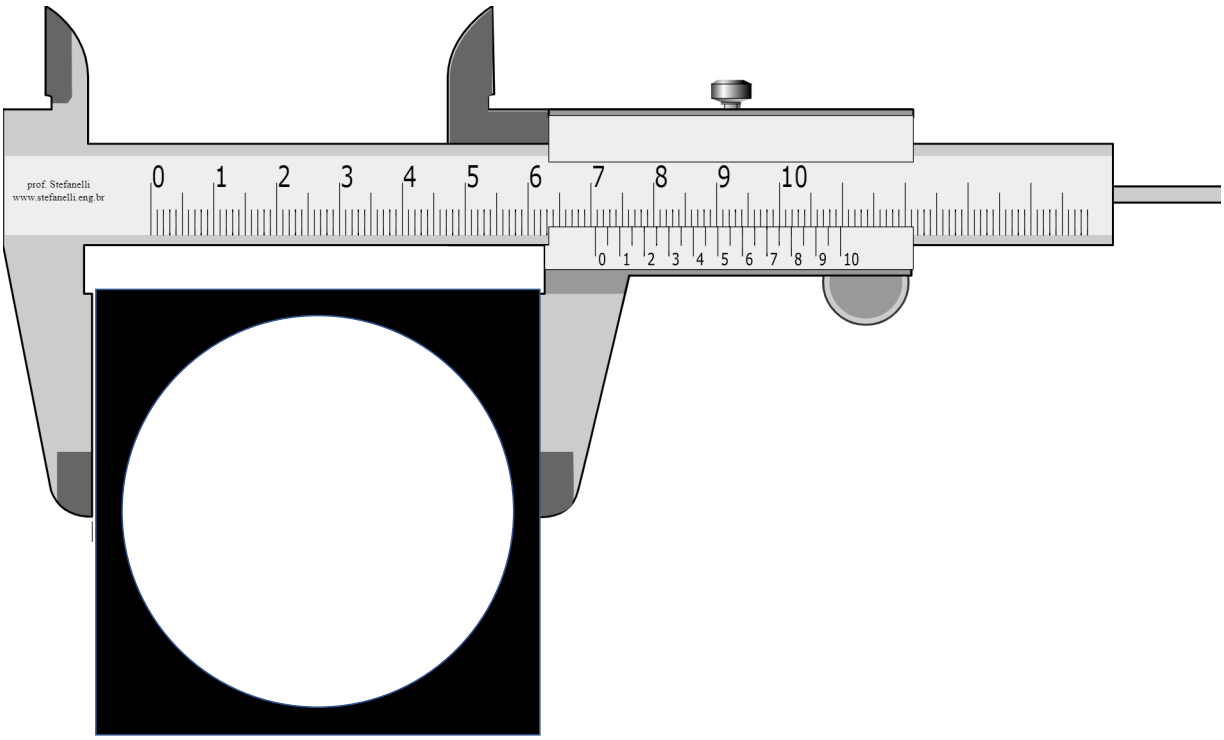
prof. Stefanelli
www.stefanelli.eng.br
0 1 2 3 4 5 6 7 8 9 10
0 1 2 3 4 5 6 7 8 9 10

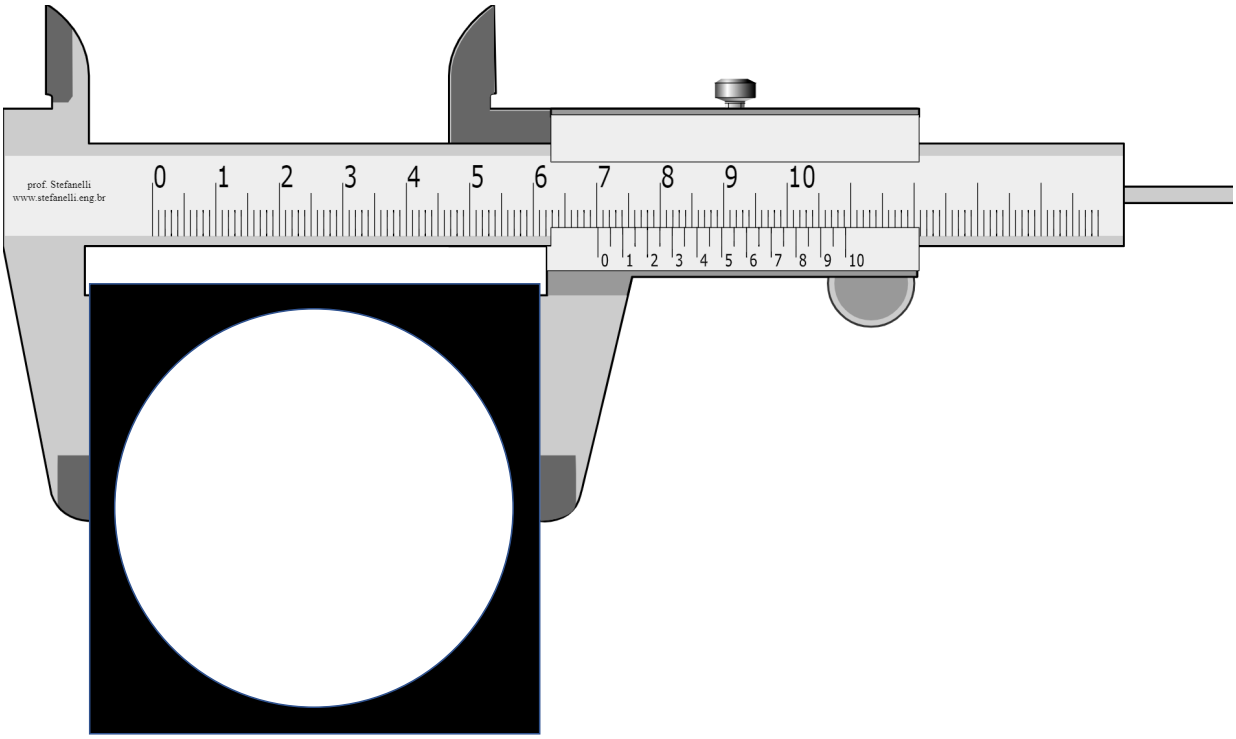
prof. Stefanelli
www.stefanelli.eng.br
0 1 2 3 4 5 6 7 8 9 10
0 1 2 3 4 5 6 7 8 9 10

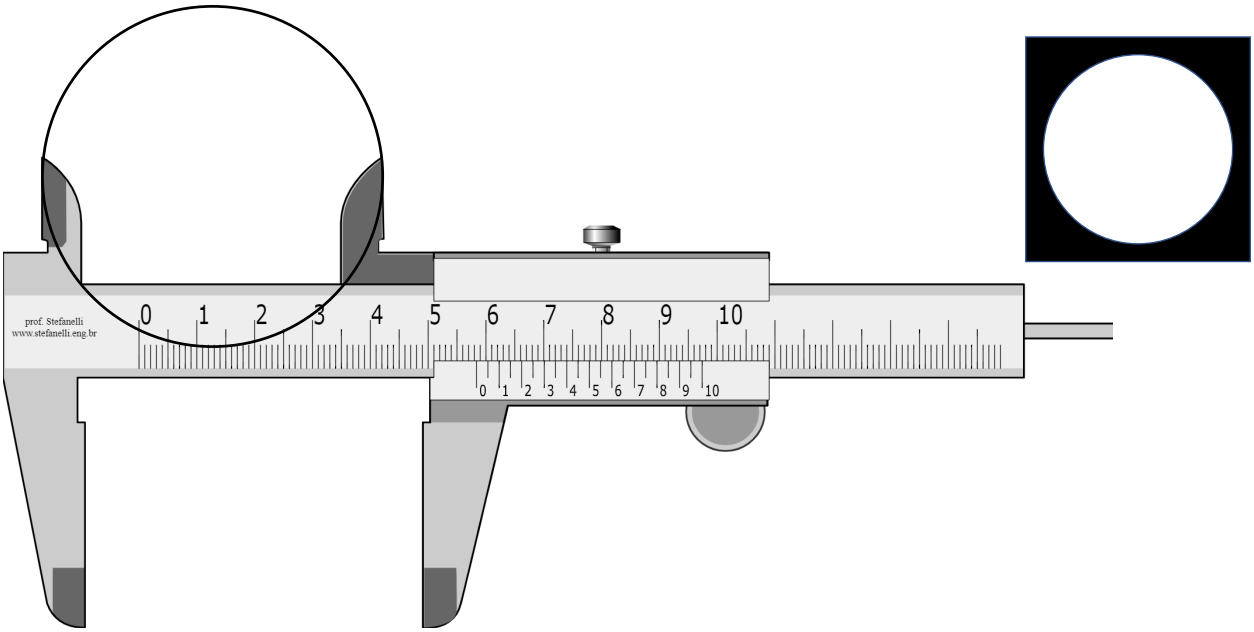
prof. Stefanelli
www.stefanelli.eng.br
0 1 2 3 4 5 6 7 8 9 10
0 1 2 3 4 5 6 7 8 9 10

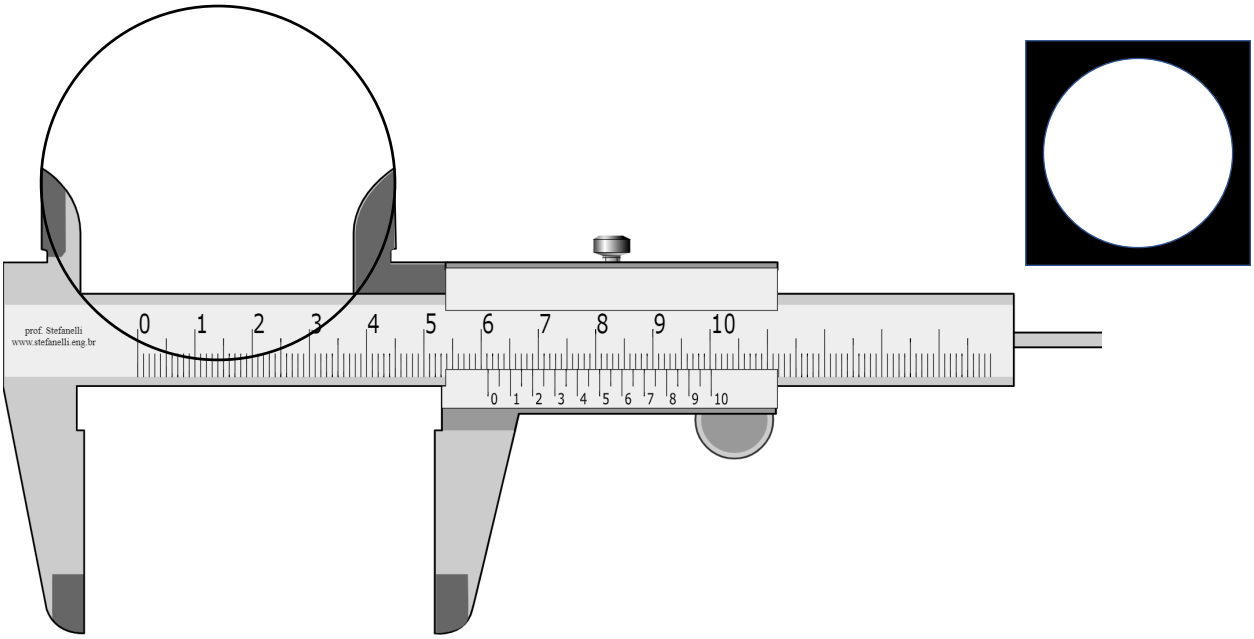
prof. Stefanelli
www.stefanelli.eng.br
0 1 2 3 4 5 6 7 8 9 10
0 1 2 3 4 5 6 7 8 9 10

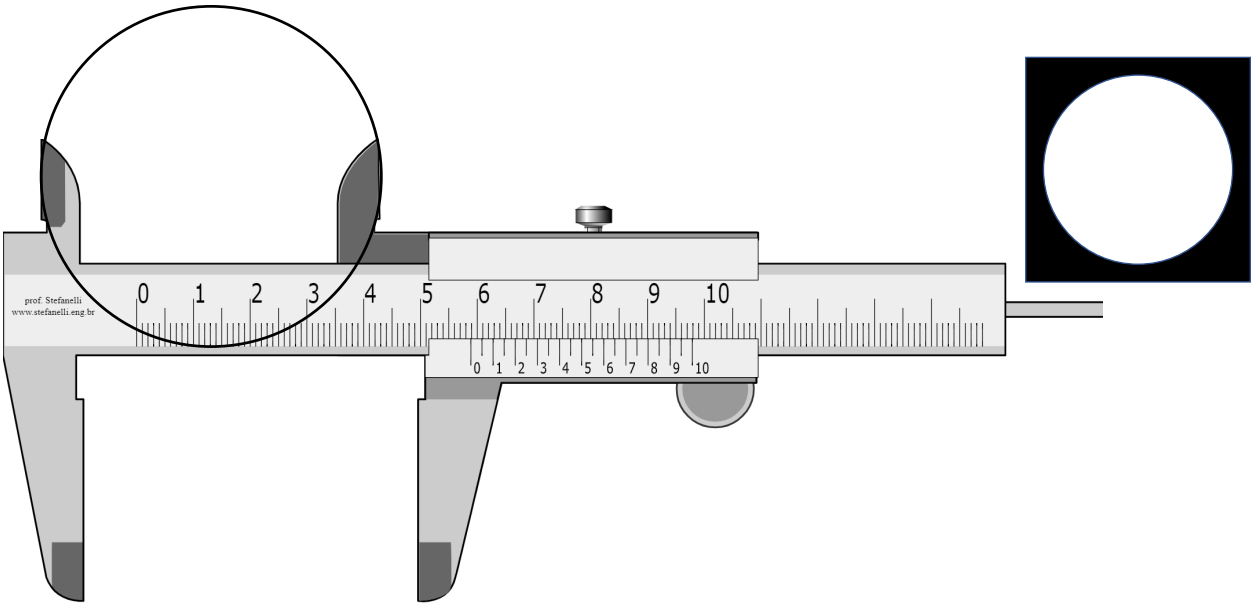
prof. Stefanelli
www.stefanelli.eng.br
0 1 2 3 4 5 6 7 8 9 10
0 1 2 3 4 5 6 7 8 9 10

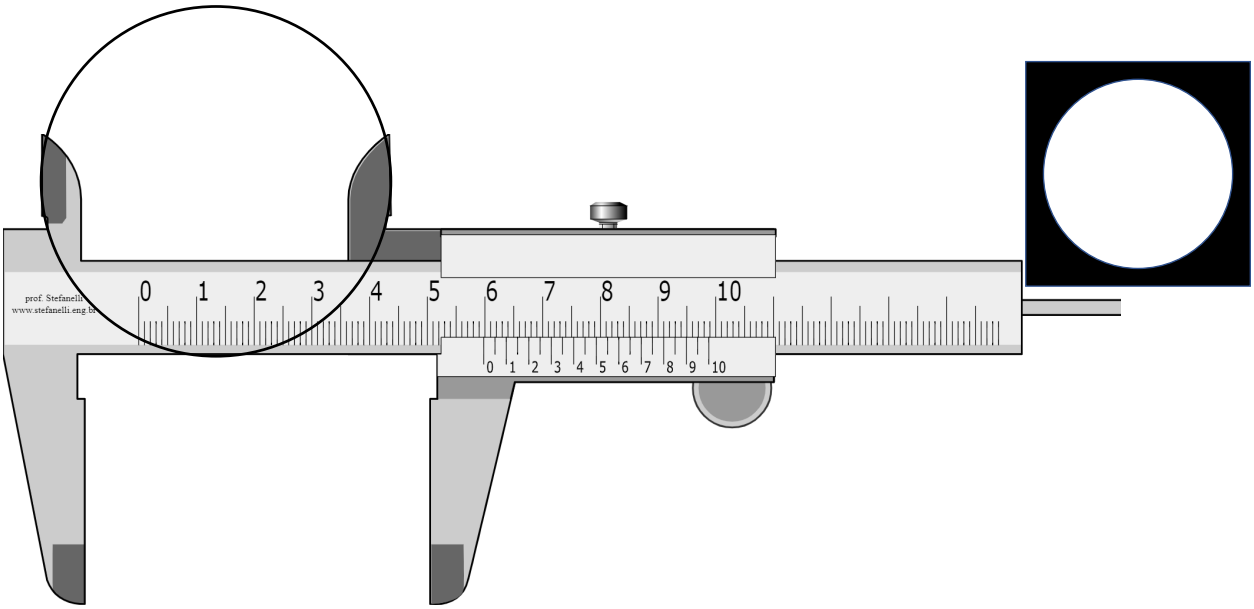
prof. Stefanelli
www.stefanelli.eng.br
0 1 2 3 4 5 6 7 8 9 10
0 1 2 3 4 5 6 7 8 9 10

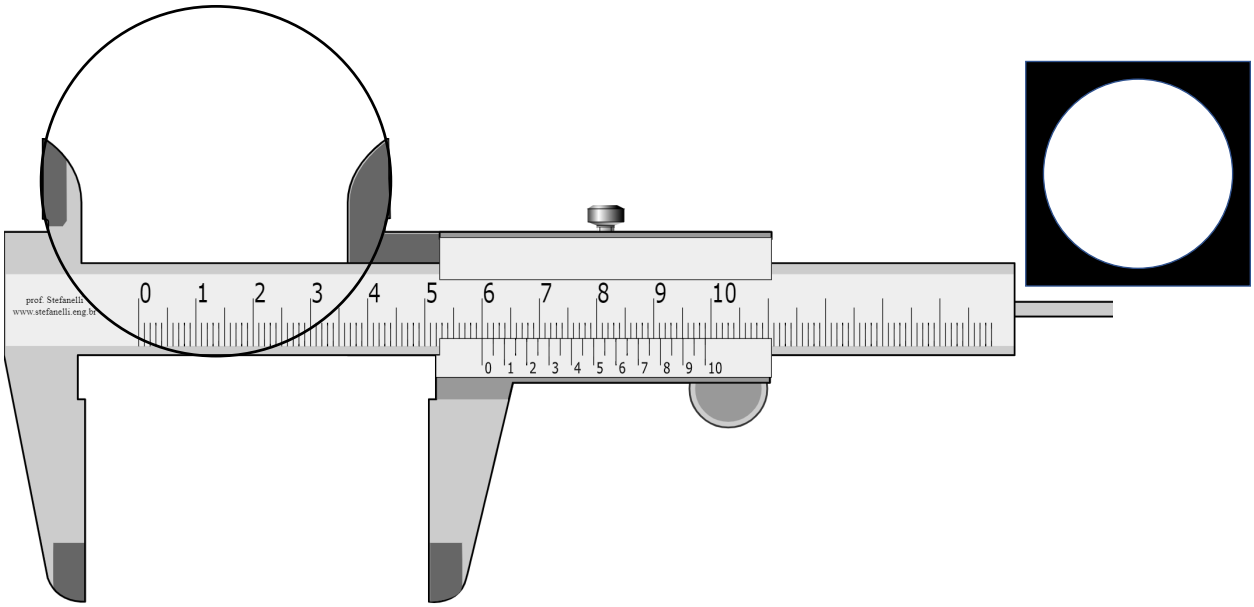
prof. Stefanelli
www.stefanelli.eng.br
0 1 2 3 4 5 6 7 8 9 10
0 1 2 3 4 5 6 7 8 9 10