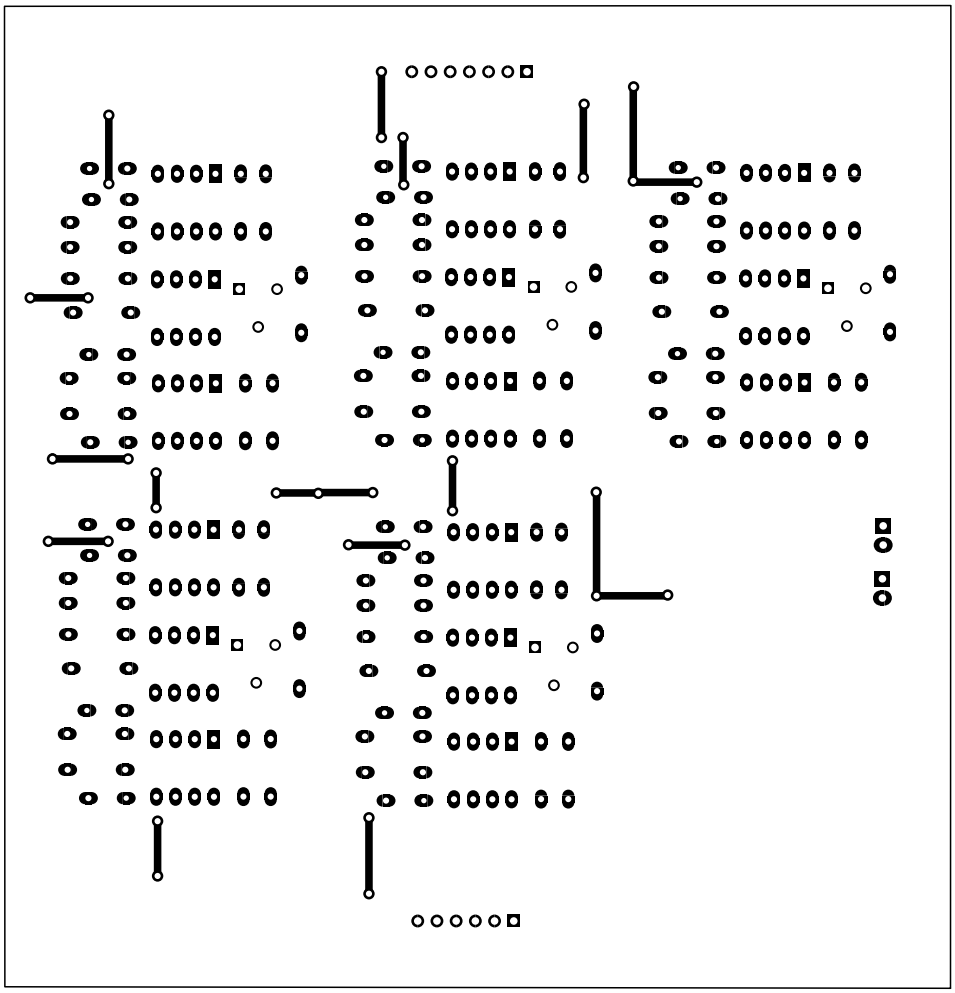

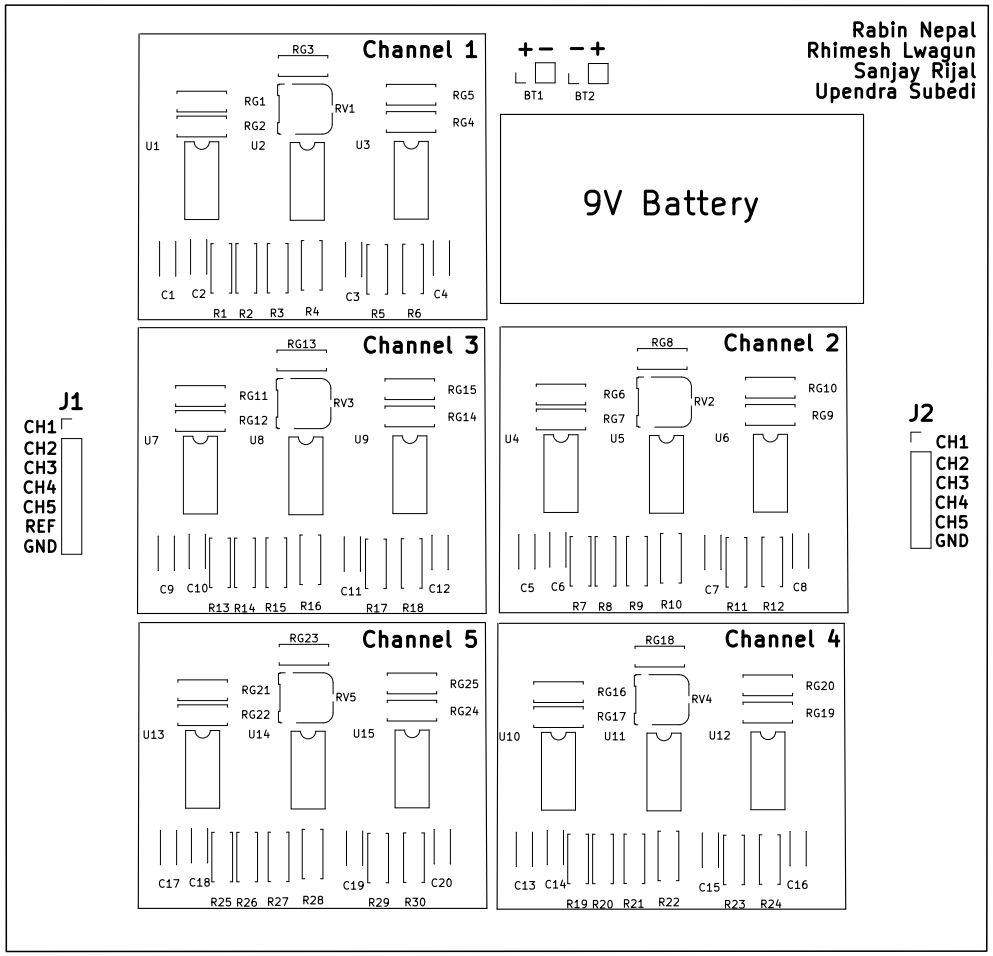
Rabin Nepal
Rhimesh Lwagun
Sanjay Rijal
Upendra Subedi
Channel 1
RG3
RG1
RG2
RV1
RG5
RG4
U1
U2
U3
C1 C2 R1 R2 R3 R4 C3 R5 R6 C4
+ − − +
BT1 BT2
9V Battery
Channel 3
RG13
RG11
RG12
RV3
RG15
RG14
U7
U8
U9
C9 C10 R13 R14 R15 R16 C11 R17 R18 C12
Channel 2
RG8
RG6
RG7
RV2
RG10
RG9
U4
U5
U6
C5 C6 R7 R8 R9 R10 C7 R11 R12 C8
J1
CH1
CH2
CH3
CH4
CH5
REF
GND
J2
CH1
CH2
CH3
CH4
CH5
GND
Channel 5
RG23
RG21
RG22
RV5
RG25
RG24
U13
U14
U15
C17 C18 R25 R26 R27 R28 C19 R29 R30 C20
Channel 4
RG18
RG16
RG17
RV4
RG20
RG19
U10
U11
U12
C13 C14 R19 R20 R21 R22 C15 R23 R24 C16