Electromagnetic Interference Effect from Power Line Noise in Electrocardiograph Signal using Faraday Cage

Noor Amalina Zakaria, Rubita Sudirman, *Member, IEEE* and Mohd. Najeb Jamaluddin

Abstract—The main objective of this study is to build a basic human size faraday cage. 1-channel ECG circuit inclusive of notch filter also has been built to test the effect of faraday cage. The outcome of ECG signals was compared when placed inside cage (inside building), outside faraday cage (inside building) and outside building. Then the study of relationship between faraday cage and the effect on power line noise in ECG system has been done. From the result of this project it can be seen that faraday cage can eliminate the 50 Hz power line noise in ECG signal.

Index Terms— ECG signal, electromagnetic interference, Faraday cage, power line noise

I. Introduction

The Electrocardiograph (ECG) signal is an electrical signal generated by the heart's beating, which can be used as a diagnostic tool for examining some of the functions of the heart. It has a principal measurement range of 0.5 to 4 mV and signal frequency range of 0.05 to 100 Hz [1].

There are three types of predominant noise that commonly contaminate the signal are baseline wander (BW) noise, electromyographic (EMG) interference, and 50Hz power line interference. A major source of noise when one is recording or monitoring the ECG signal is the electric power system. To eliminate the noises mentioned above, we can use differential amplifiers and notch filter. Actually the differential amplifiers in ECG system have already functions to eliminate the 50 Hz noise but the residual of the noise still exists. Although the existing noise is only its residual, the effect to the ECG signal is still high because the measurement range of ECG is too small which is 0.5 to 4mV only. As the solution, notch filter with the center frequency of 50 Hz has been used. But using notch filter removes the power line frequency component along with the frequency component of the ECG signal and introduces distortion to the filtered ECG signal.

Here comes the importance of building a faraday cage. The usage of faraday cage is to get the real signal without 50 Hz power line noise without using notch filter.

II. Electromagnetic Interference

Electromagnetic (EM) radiation is a self-propagating wave in space with electric and magnetic components. Table I shows the electromagnetic waves frequencies and their wavelengths respectively.

TABLE I
ELECTROMAGNETIC WAVES FREQUENCIES AND WAVELENGTHS

CLASS	FREQUENCY	WAVELENGTH
γ	300 EHz	1 pm
HX	30 EHz	10 pm
	3 EHz	100 pm
SX	300 PHz	1 nm
	30 PHz	10 nm
EUV	3 PHz	100 nm
NIR	300 THz	1 μm
MIR	30 THz	10 μm
FIR	3 THz	100 μm
EHF	300 GHz	1 mm
SHF	30 GHz	1 cm
UHF	3 GHz	1 dm
VHF	300 MHz	1 m
HF	30 MHz	1 dam
MF	3 MHz	1 hm
LF	300 kHz	1 km
VLF	30 kHz	10 km
VF	3 kHz	100 km
ELF	300 Hz	1 Mm
	30 Hz	10 Mm

γ	Gamma rays
HX	Hard X-rays
SX	Soft X-Rays
EUV	Extreme ultraviolet
NUV	Near ultraviolet
Visible light	
NIR	Near infrared
MIR	Moderate infrared
FIR	Far infrared
Radio waves	
EHF	Extremely high frequency (Microwaves)
SHF	Super high frequency (Microwaves)
UHF	Ultrahigh frequency
VHF	Very high frequency
HF	High frequency
MF	Medium frequency
LF	Low frequency
VLF	Very low frequency
VF	Voice frequency
ELF	Extremely low frequency

Power line interference is a significant source of noise in ECG signal. It consists of 50Hz pickup and harmonics, which can be modeled as sinusoids. Characteristics, which might need to be varied in a model of power line noise, of 50Hz component include the amplitude and frequency content of the signal. The amplitude varies up to 50 percent of the peak to peak ECG amplitude which is equivalent to approximately 25mV. Fig. 1 shows an example of ECG signal corrupted with power line noise.

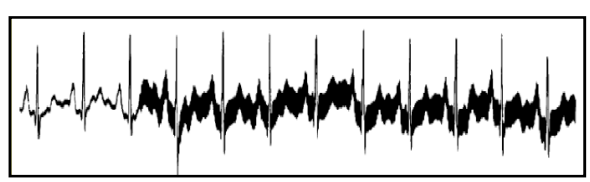

Fig. 1 ECG signal corrupted with power line noise

Authorized licensed use limited to: Universitatea Tehnica din Cluj-Napoca. Downloaded on February 20,2026 at 08:52:22 UTC from IEEE Xplore. Restrictions apply.

III. Faraday Cage

A. Theory

A Faraday cage is best understood as an approximation to an ideal hollow conductor. Externally applied electric fields produce forces on the charge carriers (usually electrons) within the conductor, generating a current that rearranges the charges. Once the charges had rearranged (to cancel the applied field inside), the current stops. Fig. 2 until Fig. 6 illustrated the working principles of faraday cage.

Fig. 2 Faraday Cage

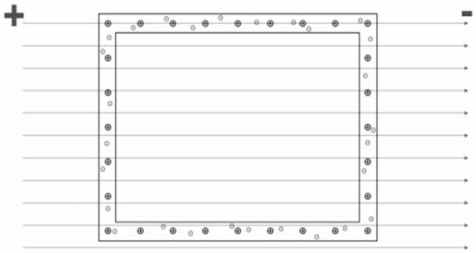

Fig. 3 Externally applied electric fields

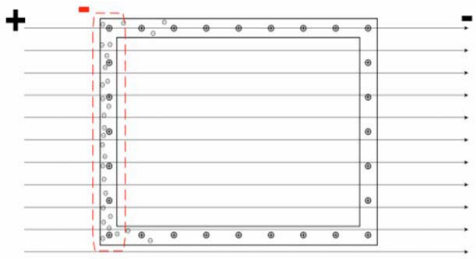

Fig. 4 Produce forces on the charge carriers within the conductor

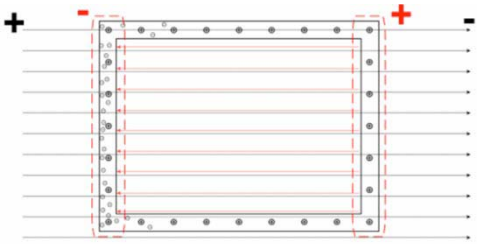

Fig. 5 Generating a current that rearranges the charges

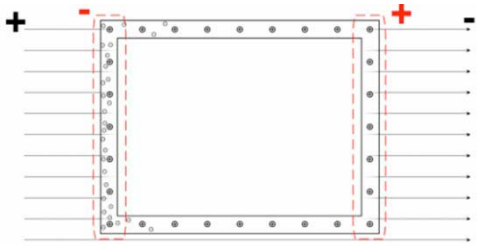

Fig. 6 Cancel the applied field inside, the current stops

B. Faraday Cage Model

A faraday cage model was built as a preliminary action to prove the concept of faraday cage. The model is a 45cm×25cm × 15cm cage built from metal net. The size of the hole is 2.3cm × 1.3cm. All of the surfaces are closed. The experiment consists of a radio, a model of faraday cage and a mobile phone. The preliminary experiment was carried out as indicated in Fig. 7 to Fig. 11.

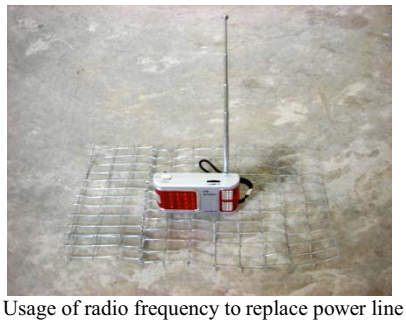

Fig. 7 Usage of radio frequency to replace power line noise

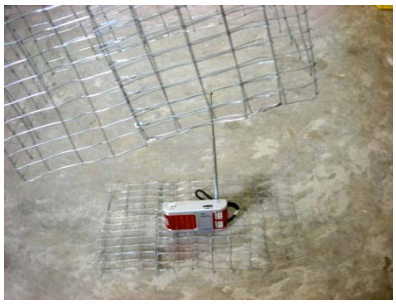

Fig. 8 The radio was placed inside the cage

Fig. 9 When all of the surfaces are closed, the radio cannot receive the radio signal

Fig. 10 When making a call, the radio capture the phone signal

Authorized licensed use limited to: Universitatea Tehnica din Cluj-Napoca. Downloaded on February 20,2026 at 08:52:22 UTC from IEEE Xplore. Restrictions apply.

Fig. 11 When the cage is opened, the radio receive the radio signal back

Fig. 12 Human size faraday cage

C. Human Size Faraday Cage

The human size portable faraday cage was built using PVC pipe as the basic shape and all of the surfaces are shielded with metal net as shown in Fig. 12.

IV. ECG CIRCUIT

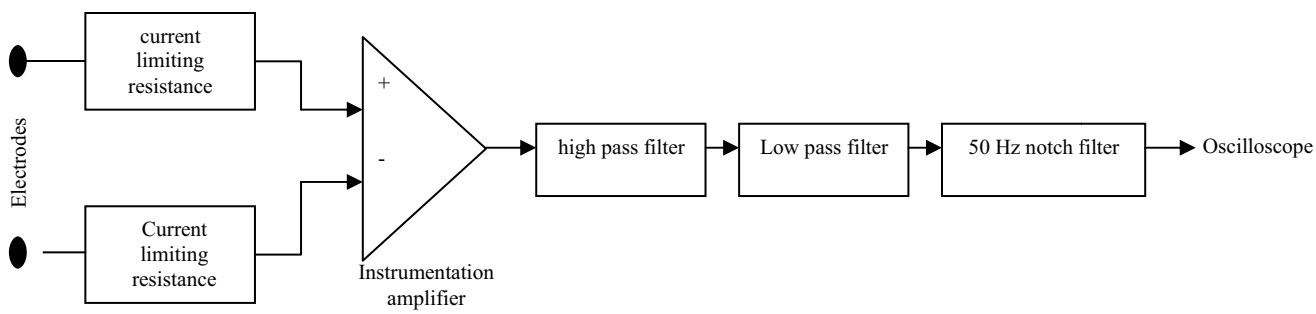

Fig. 13 Basic block diagram of ECG circuit

Fig. 13 is the basic block diagram of ECG acquisition circuit. The circuit is used to capture the ECG signal from a subject.

A. Instrumentation Amplifier

The instrumentation amplifier in ECG circuit consists of 3 operational amplifiers as shown in Fig. 14 [1]. Two front amplifiers are non-inverting follower and the third amplifier is the differential amplifier that produces output voltage that proportional to the differential between voltages applied to the two input terminals in front.

The gain that will be used is 26 because all of the standard resistors to build the circuit are available and the value of the gain must be less than 30 to avoid amplifier saturation. The formulae to calculate the value of gain is:

$$G = 1 + \frac{50k\Omega}{R_G} \tag{1}$$

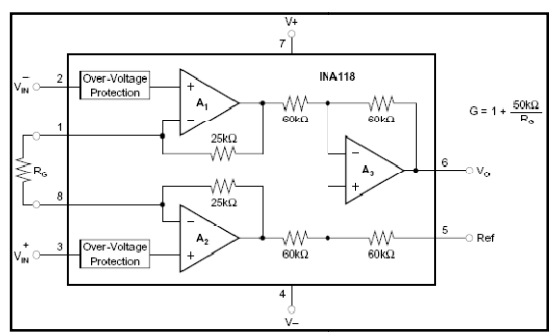

Fig. 14 Instrumentation amplifier INA118

B. DC Restorer Circuit

The DC restorer circuit or high pass filter acts as an ac-coupling circuit to put ECG baseline at zero volts (Fig. 15). The advantage of feedback approach uses an active integrator is it is linear and easier to control than RC coupling circuit. The time constant of the feedback DC restorer is a multiple of R and C [3]. The lower frequency of ECG is 0.05Hz. The selected R2 and C9 values are 3.3MΩ and 1μF.

Authorized licensed use limited to: Universitatea Tehnica din Cluj-Napoca. Downloaded on February 20,2026 at 08:52:22 UTC from IEEE Xplore. Restrictions apply.

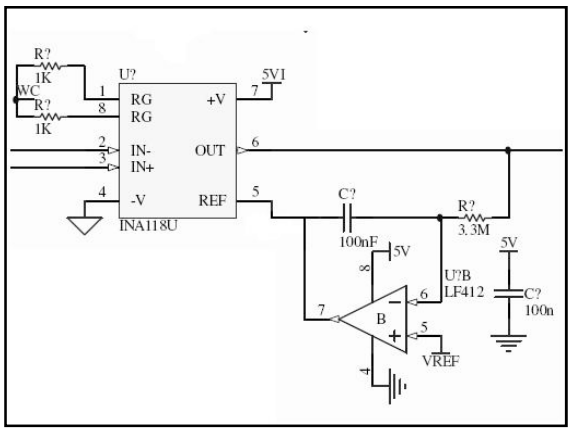

Fig. 15 Instrumentation amplifier and the DC-restore circuit

C. Anti-aliasing Filter (Low Pass Filter)

The function of low pass filter is to determine the high cutoff frequency for the signal and amplifies the signal in accordance to the requirement of ADC. The gain 38.5 will be used to complement the gain of 26 at the instrumentation amplifier to achieve total gain 1001. Bessel 8th order was used because it has minimal distortion and it removes frequency above cutoff (Fig. 16).

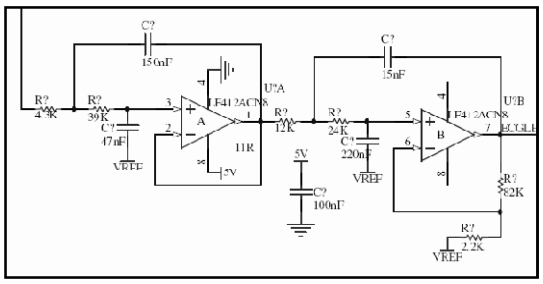

Fig. **16** Bessel filter with flat group delay in the pass band

D. Twin-T Notch Filter

Twin-T notch filter (Fig. 17) has been implemented by [6] for a remote ECG system because ECG circuit needs a very sharp band rejection or notch filter to suppress the power line noise. [4] concluded that the notch filter does not affect the RR interval of the ECG signal by more than 1ms.

V. THE EXPERIMENT

A. Setup

The setup of the experiment is as follows:

i. ECG signal and noise signal from 10 subjects have been taken in several different setting of places. The setting of places is shown in Fig. 18.
ii. ECG signal and noise signal have been recorded in 30 seconds using GoldWave software. The setting to take ECG signal in this experiment is shown in Fig. 19 and the setting to take noise signal is shown in Fig. 20.
iii. Every data that has been collected in experiment has been cut to 5 seconds.
iv. All the data have been transform to frequency domain using Fast Fourier Transform (FFT) in MATLAB. The coding is as shown in Fig. 21.
v. The result of every FFT is focuses at 50Hz frequency amplitude.

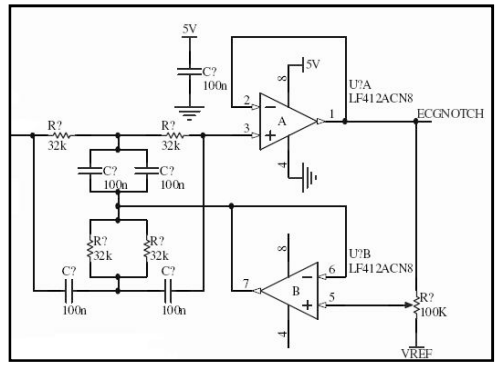

Fig. 17 Twin-T notch filter circuit

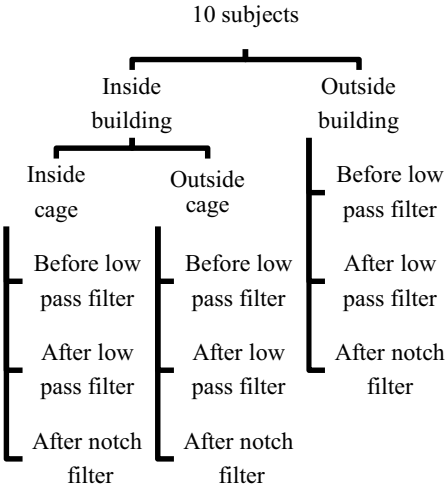

Fig. 18 Several setting of places to capture ECG signal

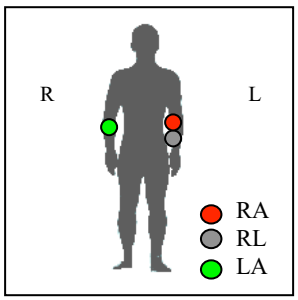

Fig. 19 Point to take ECG signal

Authorized licensed use limited to: Universitatea Tehnica din Cluj-Napoca. Downloaded on February 20,2026 at 08:52:22 UTC from IEEE Xplore. Restrictions apply.

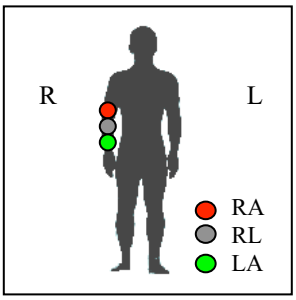

Fig. 20 Point to take noise signal

```
%load wavefile here

y = wavread('filename');
for i = 1:16000
w(i) = y(i);
end

x = 1:16000;
t = x / 8000;
sp01 = fft(w);
f = x * 8000 / 16000;
N = length(w) / 2;

figure
plot(f(1:N),abs(sp01(1:N)))
title('filename');
```

Fig. 21 Fast Fourier Transform (FFT) coding in MATLAB

VI. Result and Discussion

The concept of faraday cage has been proven with an experiment using a model of faraday cage, a radio and a mobile phone. The radio cannot receive radio signal when placed inside the cage. But the radio can capture the mobile phone signal when making a call although the radio was placed inside the cage. In summary:

i. The radio frequency cannot penetrate through the model of faraday cage.
ii. The mobile phone frequency can penetrate through the model of faraday cage.
iii. The radio wavelength is larger than the wavelength of the mobile phone signal. The wavelength of the mobile phone signal is small enough to penetrate through the holes of the model faraday cage.
iv. If solid metal is used to replace the metal net to build the model faraday cage, the signal of the mobile phone also cannot penetrate through the cage.

The result from the experiment using human size faraday cage and 1-channel ECG circuit are as shown in Table II. The units of data gained from experiment (graph generated using MATLAB) are in quantization level of ADC 16 bit from 0 to 5V. 16 bit ADC has 65530 quantization levels. Therefore, each level is equivalent to 76.3µV. Data in Table II are the experiment results in unit of mV.

The overall result from experiment was as expected result. The signals that have been taken inside the building (outside faraday cage) have very high 50 Hz frequency amplitude which is 62.80 (min) due to the power line noise that exists inside the building. The signals that have been taken inside the building (inside faraday cage) have low 50 Hz frequency amplitude which is 11.90 (min). Although the signals have been taken inside the building, the 50 Hz frequency amplitude is low because the faraday cage has eliminated outside frequency from coming into the cage. The signals that have been taken outside the building (outside faraday cage) also have low 50 Hz frequency amplitude, merely same with the 50 Hz frequency amplitude inside the building (inside faraday cage) which is 11.95 (min). This is because 50 Hz noise frequency only exists inside building.

Table II
Experiment Result

Subject	Outside cage (inside building) (mV)	Inside cage (inside building) (mV)	Outside cage (outside building) (mV)
1	4.96	0.46	0.31
2	1.60	0.38	0.53
3	2.06	0.08	0.38
4	1.98	0.38	0.53
5	2.90	0.11	0.23
6	14.65	1.07	0.69
7	2.14	0.76	0.84
8	9.19	4.58	4.96
9	6.33	0.92	0.38
10	2.10	0.34	0.27
Min	4.79	0.91	0.91

VII. Conclusion

Faraday cage is a useful tool to block electromagnetic interference in biomedical signal such as ECG signal. This study is only focusing on removing the 50Hz power line noise in ECG signal. This is because power line noise is the most significant noise and it resides in the ECG signal itself that make it harder to be removed. Using notch filter to remove power line noise will eliminate not only 50Hz power line noise but also the ECG signal itself. The electromagnetic waves that can penetrate through the faraday cage depend on the size of holes and the wavelength of the electromagnetic waves. The size of holes must be much smaller than the wavelength of the electromagnetic wave. Only then the wave cannot penetrate through the holes of faraday cage. From the result of experiment, the frequency range that can penetrate through the faraday cage that has been built is from 0 Hz to 100 MHz. It could be concluded that 50 Hz power line noise could not penetrate through the faraday cage. So, there is no power line noise inside the faraday cage.

Acknowledgment

The authors would like to express our greatest gratitude to the Universiti Teknologi Malaysia and the Ministry of Science, Technology and Innovation under research Vote 79023 for supporting this study.

Authorized licensed use limited to: Universitatea Tehnica din Cluj-Napoca. Downloaded on February 20,2026 at 08:52:22 UTC from IEEE Xplore. Restrictions apply.

REFERENCES

[1] Jamaluddin, M. N. (2007). "*Real-Time Implementation of Twelve-Lead Automated ECG System",* Master Thesis, Universiti Teknologi Malaysia.

[2] Webster, J. G. (1998), *Medical Instrumentation: Application and Design*, 3rd edition, Wiley & Sons.

[3] Carr, J.J. and Brown, J. M. (2000). *Introduction to Biomedical Equipment and Technology*. 4th Edition. Upper Saddle River, New Jersey Prentice Hall.

[4] Hejjel, L. (2004). Suppression of Powerline Interference by Analog Notch Filtering in the ECG Signal for Heart Rate Variability Analysis: To Do or Not to Do? *Med. Sci. Monit.* Vol.10: 6-13

[5] Hejjel, L. and Kellenyi, L. (2005). The Corner Frequencies of the ECG Amplifier for the Heart Rate Variability Analysis. *Physiologocal Measurement Conference.* 26(1) 31-47.

[6] Bai, Y.W., Cheng, C.Y., Lu, C.K., Huang, C.H., Chen, Y.T. and Lin Y.N. (2003). Adjustable 60 Hz Noise Reduction and ECG Signal Amplification of a Remote Electrocardiogram System. *IEEE Instrumentation and Measurement Technology Conference.* 1: 197-202.

[7] Bai, Y.W., Chu, W.Y., Chen, C.Y., Lee, Y.T., Tsai, Y.C. and Tsai, C.H. (2004). Adjustable 60 Hz Noise Reduction by a Notch Filter for ECG Signals. *IEEE Instrumentation and Measurement Technology Conference.* 3: 1706-1711.

Authorized licensed use limited to: Universitatea Tehnica din Cluj-Napoca. Downloaded on February 20,2026 at 08:52:22 UTC from IEEE Xplore. Restrictions apply.