2024 2nd International Conference on Mechatronics, IoT and Industrial Informatics (ICMIII) | 979-8-3503-8663-9/24/$31.00 ©2024 IEEE | DOI: 10.1109/ICMIII62623.2024.00175

Research on Design Method of ECG Filter Based on Multisim 14

Yinping Chen
Wuhan Donghu University
Wuhan, China
43882611@qq.com

***Abstract*—Analog filters are an indispensable front-end noise reduction method in signal monitoring, control, and other fields. This paper uses suitable integrated operational amplifiers, resistances and capacitors to design an ECG (Electrocardiogram signal) filter, which can filter out the interference signals such as baseline drift, myocardial disturbance and 50 Hz frequency of the original ECG signal. The ECG signal of Multisim 14 Agilent function generator is used as a simulation signal source, and the designed circuit is simulated and tested. The simulation results confirmed the correctness and accuracy of the design, providing a reference for the design of high-performance complex analog filters.**

Keywords—ECG signal, analog filter, simulation, Multisim 14

I. Introduction

In the basic experimental teaching related to the design of analog filter, standard signals such as sinusoidal signals or square waves are often used as test sources for designed filter, which can easily lead students to stay at the theoretical level due to a lack of intuitive effects, making it difficult for them to feel the efficacy of filters. Multisim 14 is an electronic simulation software launched by National Instruments, Inc. It has powerful SPICE simulation and schematic capture, circuit analysis, simulation instrument testing, and other functions. Using the ECG signal built-in to the Agilent function generator in Multisim 14 as a signal source to test the performance of an analog ECG signal filter can provide a visual sense of the actual efficacy of the filter, thereby enhancing teaching effectiveness and exploring a new approach for basic experimental teaching.

II. Design of ECG filter

The frequency range of normal human electrocardiogram signals is 0.05-100Hz, with 90% of the spectral energy concentrated between 0.25-35Hz. When collecting ECG signals, it is easily affected by factors such as equipments and human activities. When people speak and breathe, the collected ECG data often contains low-frequency interference of about 0.1-0.25Hz. Under the control of the nervous system, muscle mechanical activity is accompanied by bioelectric activity, resulting in high-frequency interference with a frequency range of 20-5000Hz. Besides, when collecting ECG signals with electronic devices, there is often a narrow-band noise centered at 50Hz from the power line, which is strong enough to drown out the useful ECG signals. According to the spectral characteristics of ECG signals, the ECG filter is designed consisting of a low-pass filter, a high-pass filter, and a 50 Hz notch filter.

A. Design of low-pass filter

Excitation and contraction are the most basic functions of muscles, which are controlled by the nervous system and accompanied by mechanical and bioelectric activities. The curve of potential difference generated by these bioelectric activities over time is known as electromyogram. The frequency range of electromyographic signals is 20-5000Hz. To eliminate this effect, a low-pass filter can be used, as shown in Figure 1.

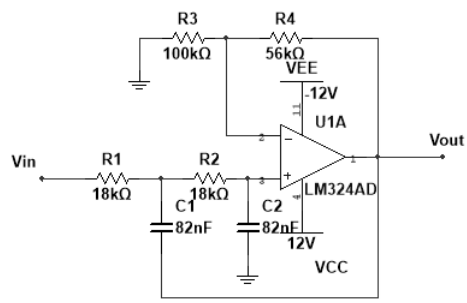

Fig. 1. Low-pass filter

Take R3=100kΩ and R4=56kΩ, the voltage gain in the passband is 1.56, and the quality factor Q=0.694, so that the filter has a relatively flat amplitude frequency characteristic. Set R1=R2=18 kΩ and C1=C2=82nF to make the filter cutoff frequency fL≈107.8HZ. Figure 2 shows the simulation results of the amplitude-frequency characteristics of the low-pass filter. From the amplitude-frequency characteristic diagram, it can be seen that the passband voltage gain is 3.856dB, and the frequency at -3dB is 105.667Hz, which means that the signal amplitude is amplified by 1.56 times. The simulation results show that the design ensures that the ECG signal can pass through the low-pass filter without distortion.

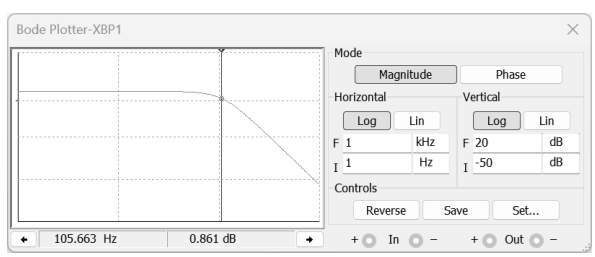

Fig. 2. Amplitude-frequency characteristics of low-pass filter

B. Design of high-pass filter

The breath-induced baseline drift can be thought of as a sinusoidal component added to the ECG at the rate of breathing. The amplitude and frequency of this sinusoidal component are changing. The amplitude of the ECG signal caused by breathing can change by up to 15%. The frequency of baseline drift is about 0.1 Hz to 0.25 Hz. To remove this

Authorized licensed use limited to: Universitatea Tehnica din Cluj-Napoca. Downloaded on February 26,2026 at 07:17:47 UTC from IEEE Xplore. Restrictions apply.

interference, a high-pass filter is designed, as shown in Figure 3.

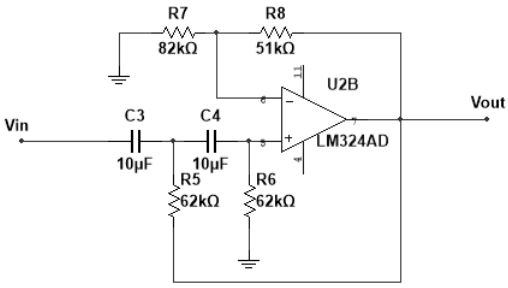

Fig. 3. High-pass filter

Take R7=82kΩ, R6=51kΩ, the passband voltage gain is 1.62, quality factor Q=0.724, the filter has relatively flat amplitude-frequency characteristics. Take R5=R6=62 kΩ and C3=C4=10uF to make the filter cutoff frequency fH≈0.25HZ. Figure 4 shows the simulation results of amplitude-frequency characteristics of the high-pass filter. According to the amplitude-frequency characteristic diagram, the frequency is 0.25Hz at -3dB, the passband voltage gain is 4.2dB , which means that the amplitude of the signal is amplified by 1.62 times. Simulation results show that the design ensures that the ECG signal can pass through the high-pass filter without distortion.

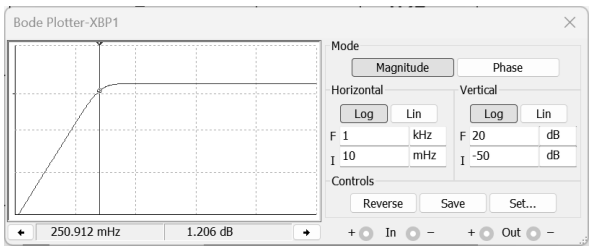

Fig. 4. Amplitude-frequency characteristics of high-pass filter

C. Design of 50Hz notch filter

Due to the ubiquity of power supply networks, power frequency interference at 50Hz is very common and is also the main source of interference in ECG signals. It is mainly introduced by capacitive coupling of the input wire of the human body and the measurement system, in the form of displacement current, which is strong enough to overwhelm useful ECG signals. To eliminate power frequency interference, a 50Hz trap filter is introduced, using a second-order bandstop filter with voltage followers, as shown in Figure 5.

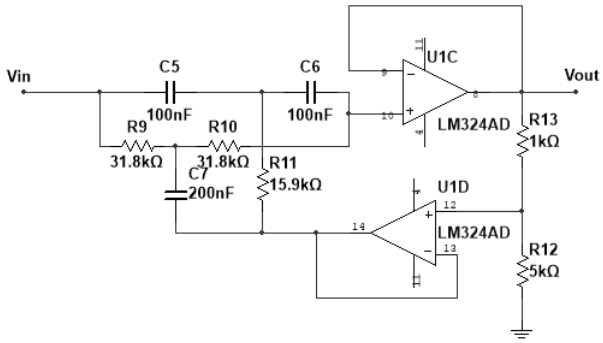

Fig. 5. 50Hz notch filter

Figure 6 shows the simulation results of amplitude-frequency characteristics of the 50Hz notch. According to the amplitude-frequency characteristic diagram, the waveform gain is about -40dB at the center frequency point of 50Hz, which can well filter out the power frequency interference. The design ensures that the ECG signal passes through the filter without distortion.

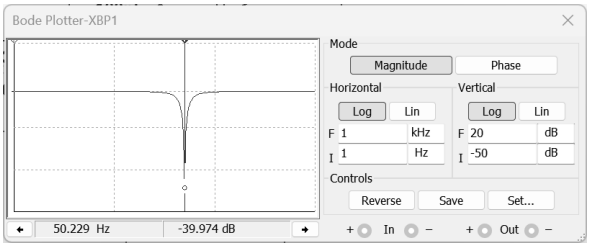

Fig. 6. Amplitude-frequency characteristics of notch filter

III. Simulation Validation

A. Construct ECG signal source

Using the built-in ECG signal CARDIAC of the Agilent function generator (shown in Figure 7) add interference as a signal source for filter simulation.

Fig. 7. Agilent function generator

Call the ECG signal built into the Agilent function generator in Multisim 14. This is done as follows: Click the shift+Arb key, Select CARDIAC signal through the > key，Set the frequency and amplitude of the ECG signal through the Freq and Ampl keys. In this paper, the amplified ECG signal is simulated, with a frequency of 2Hz and an amplitude of 1 Vpp. The waveform of the ECG signal can be seen with an oscilloscope as shown in Figure 8.

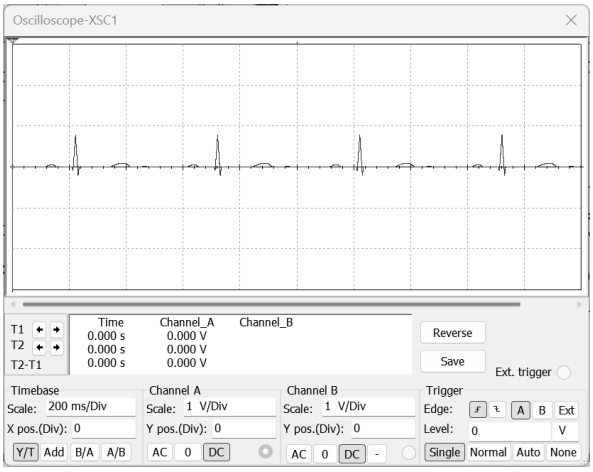

Fig. 8. ECG signal waveform

Authorized licensed use limited to: Universitatea Tehnica din Cluj-Napoca. Downloaded on February 26,2026 at 07:17:47 UTC from IEEE Xplore. Restrictions apply.

During the simulation, the Agilent function generator is connected with three analog signal sources, which simulate baseline drift interference caused by breathing, high-frequency myoelectric interference and 50Hz power frequency interference respectively. The baseline drift interference is set to 70mVrms and 0.25Hz, the EMG interference is set to 360mVrms and 1kHz, and the power frequency interference is set to 360mVrms and 50Hz. Figure 9 shows the waveform of the ECG signal after adding 360mVrms, 1kHz myoelectric interference, 70mVrms, 0.25Hz baseline drift interference caused by breathing and 360mVrms, 50Hz power frequency interference.

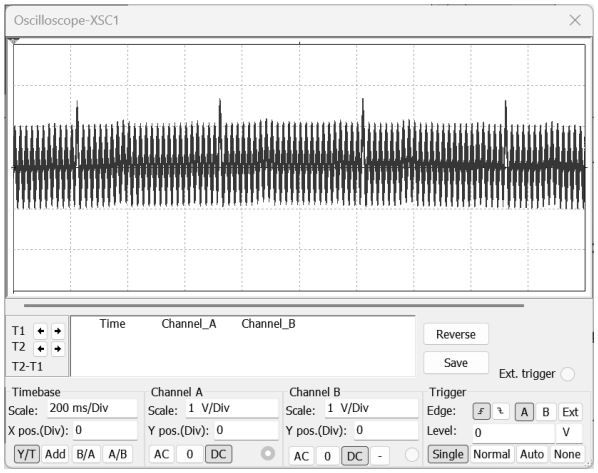

Fig. 9. Disturbed ECG waveform

B. Simulation results

The disturbed ECG signal is passed through a complete ECG signal filter composed of low-pass, high-pass and 50Hz notch, and the filtered waveform is shown in Figure 10. According to the simulation results, the filtered signal is basically the same as the original ECG signal, but there are still noise interference signals.

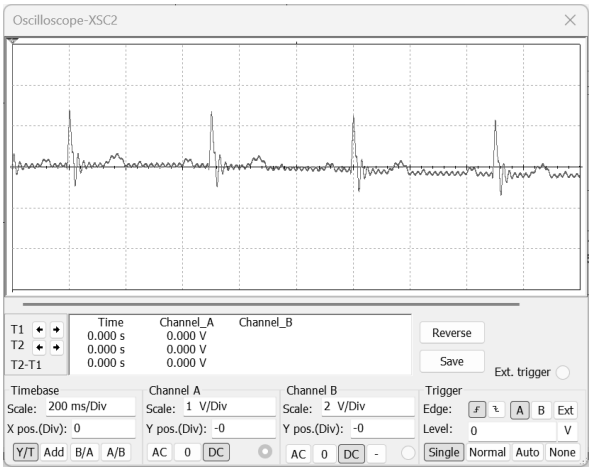

Fig. 10. Filtered ECG signal

The frequency value of the filter circuit mentioned above deviates a little from the theoretical value, resulting in bad filtering effect in practice. If the component is not actually available, but only refers to the theoretical value, the resistance parameter can be adjusted to obtain better filtering effect, as shown in Figure 11.

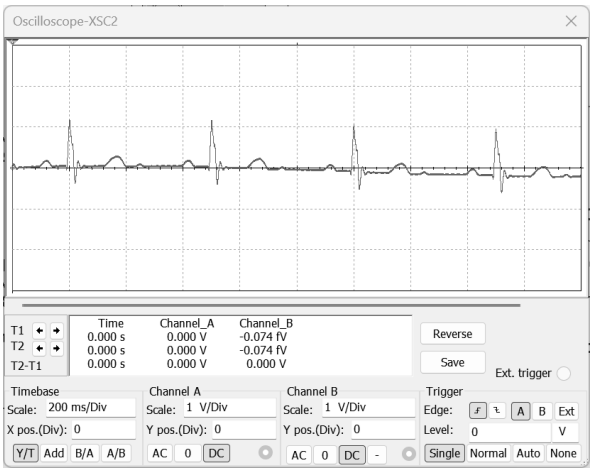

Fig. 11. Improved filtering effect

IV. Conclusion

This article proposes a method for constructing ECG signals based on Multisim 14, and verifies the design schemes of high-pass, low-pass, and 50 Hz notch filters. The simulation results show that the proposed method is simple and convenient, the design scheme is convenient and stable, the signal fidelity is high, and the filtering effect is excellent. This virtual experiment method combines design, simulation and experiment, and is simple and easy to implement. Applying this method to the filter experiment of electronic technology course can make up for the shortcomings of traditional verification experiment, deepen students' understanding and application of theoretical knowledge, improve students' comprehensive ability, cultivate students' thirst for knowledge and broaden their scope of knowledge.

Acknowledgments

2023 Teaching and Research Project of Wuhan Donghu University (Research on curriculum reform of engineering major in private colleges under the background of Engineering education professional certification)

References

[1] An Chen, Zhaoyong Hu and Siming Zeng, “Experimental Improvement of Simulated Electronic Technology Based on Engineering Certification Revolution and Practice,” Experimental Science and Technology, 2020, 18(5), pp. 125-129.

[2] Runqiang Wu, Zhongyao Tuo and Zeka Gong, “Experimental Teaching Design for Analog Filters,” Laboratory Science, 2024, 27(01),pp. 124-127.

[3] Zhao Huanyu, Li Tongliang, Yang Jian and Pang Chaoyi,“An error-bounded median filter for correcting ECG baseline wander,” Health Information Science and Systems, Volume 11, Issue 1. 2023. pp. 45-46.

[4] Huang Zhiwei, Huang Guoyu and Wang Lijun,“Electricity based on NI Multisim Computer simulation design and analysis of sub circuits ,” Beijing: Electronics Industrial Press, 2017.

Authorized licensed use limited to: Universitatea Tehnica din Cluj-Napoca. Downloaded on February 26,2026 at 07:17:47 UTC from IEEE Xplore. Restrictions apply.