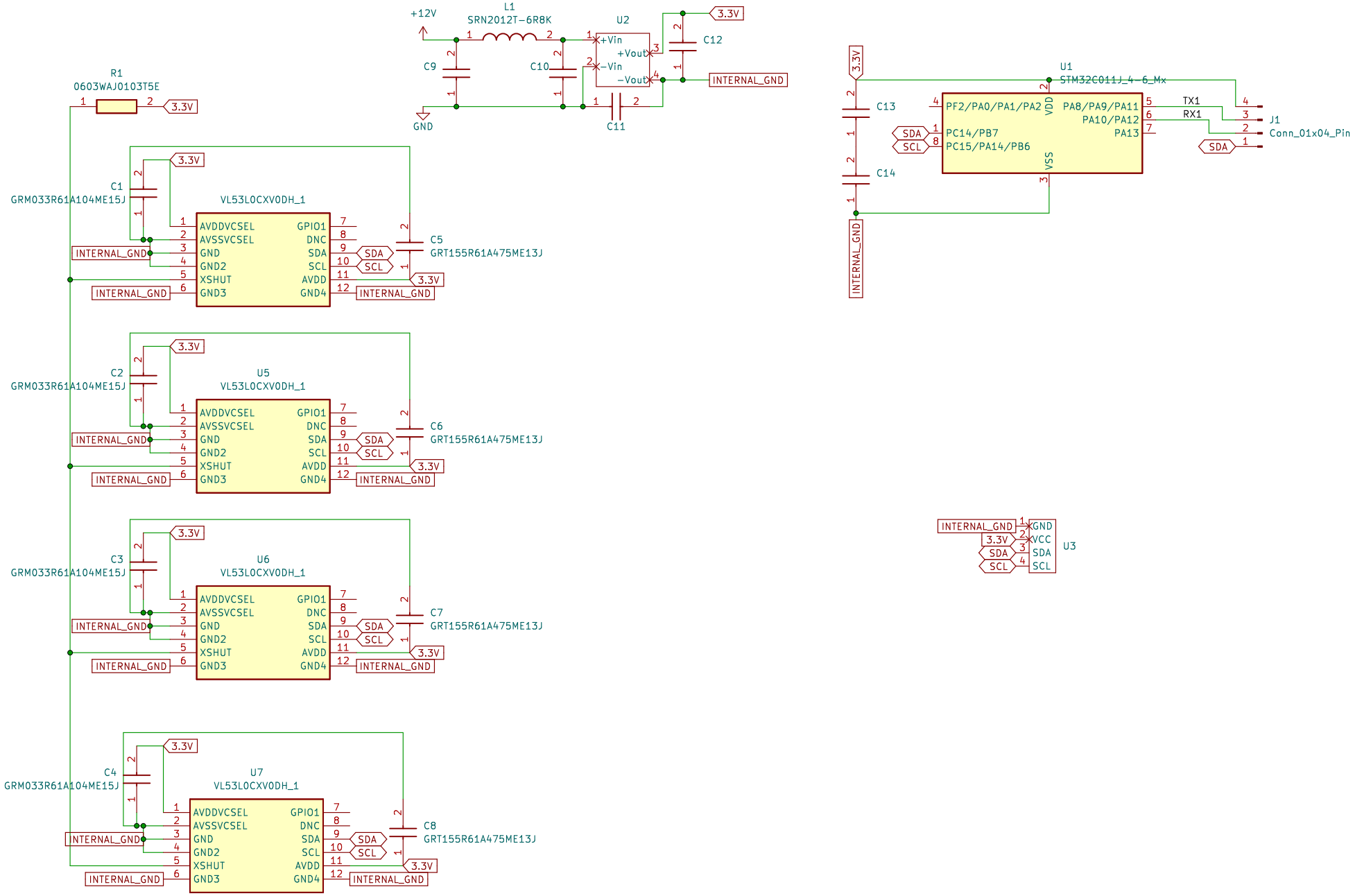
+12V
L1
SRN2012T-6R8K
U2
+Vin
+Vout
-Vin
-Vout
C9
C10
C11
C12
3.3V
INTERNAL_GND
GND
R1
0603WAJ0103T5E
C1
GRM033R61A104ME15J
VL53L0CXV0DH_1
AVDDVCSEL
AVSSVCSEL
GND
GND2
XSHUT
GND3
GPIO1
DNC
SDA
SCL
AVDD
GND4
C5
GRT155R61A475ME13J
C2
U5
C6
C3
U6
C7
C4
U7
C8
U1
STM32C011J4-6-Mx
PF2/PA0/PA1/PA2
PC14/PB7
PC15/PA14/PB6
VDD
VSS
PA8/PA9/PA11
PA10/PA12
PA13
TX1
RX1
J1
Conn_01x04_Pin
C13
C14
U3
KGND
KVCC
SDA
SCL