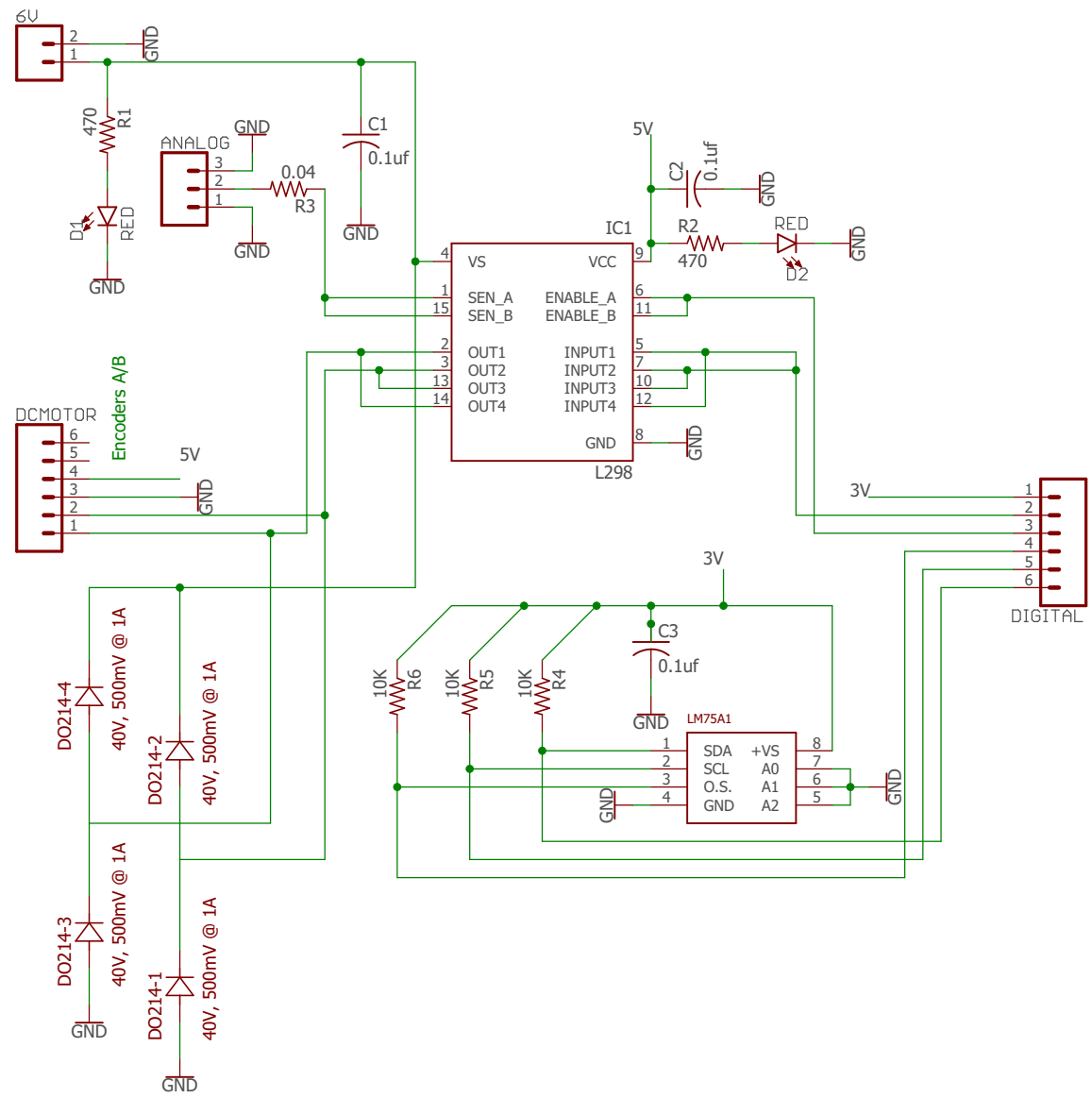

TITLE:	HW1_Justin Ngo_u0453732_MotorPCB
Document Number:	Lab Section#3
REV:	0
Date: 1/25/2017 1:16 PM	Sheet: 1/1