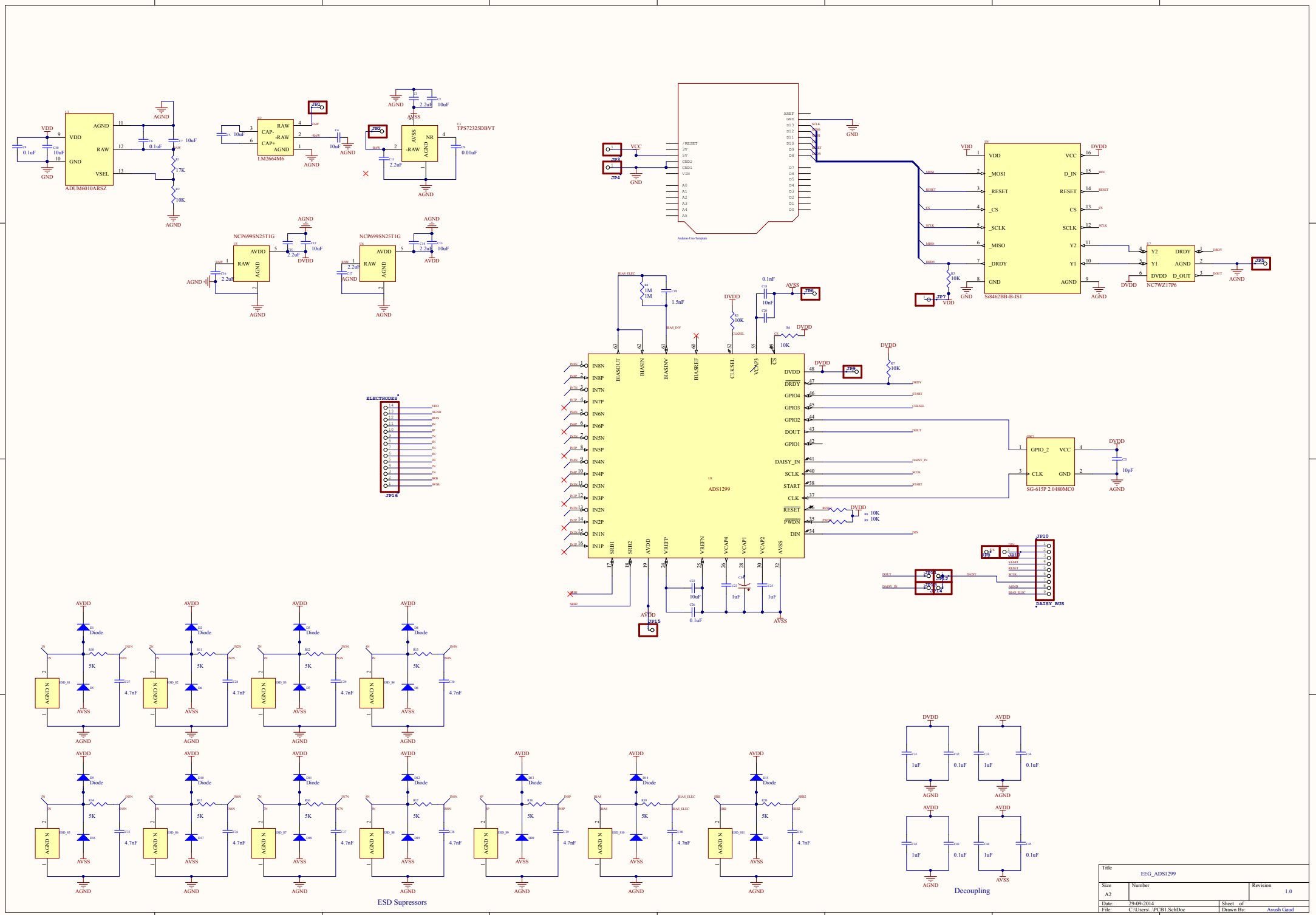
ADUM6010ARSZ
LM2664M6
TPS72325DBVT
NCP699SN25T1G
Arduino Uno Template
Si8462BB-B-IS1
NC7WZ17P6
ADS1299
SG-615P 2.0480MC0
ELECTRODES
JP16
DAISY_BUS
ESD Supressors
Decoupling
Title
EEG_ADS1299
Size
A2
Number
Revision
1.0
Date:
29-09-2014
Sheet of
File:
C:\Users\...\PCB1.SchDoc
Drawn By:
Ayush Gaud