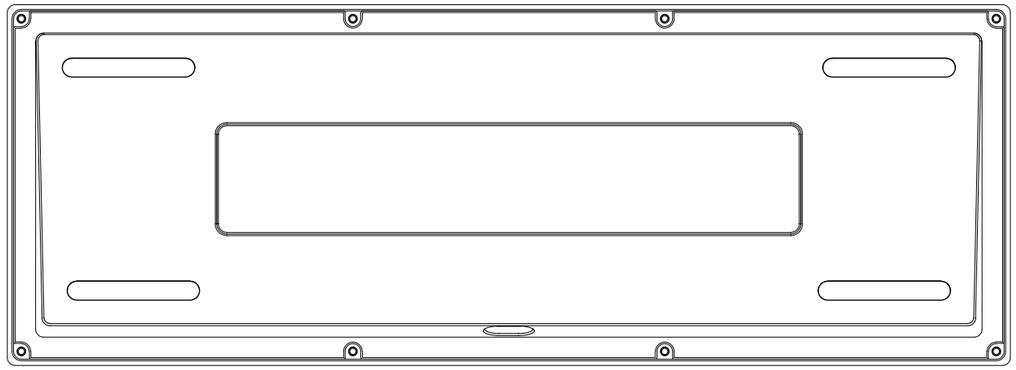

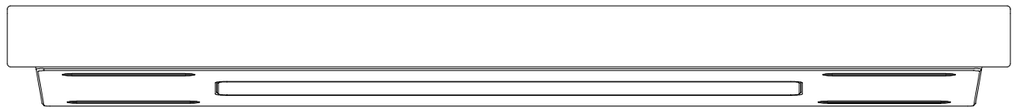

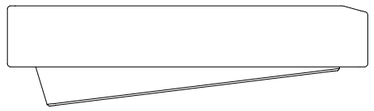

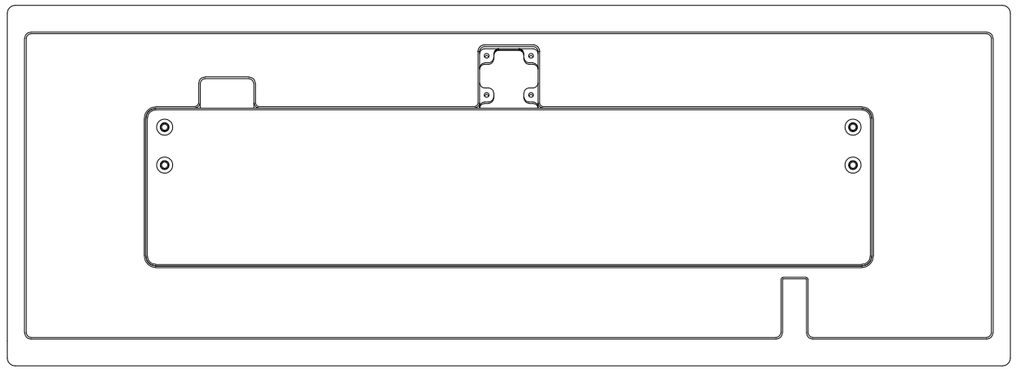

NOTES:

1. THIS DRAWING IS AN OVERVIEW, PLEASE REFER TO 3D MODEL FOR DETAILS
2. ALL UNITS ARE IN MM UNLESS SPECIFIED OTHERWISE
3. ALL TOLERANCES ARE ±0.125 MM UNLESS SPECIFIED OTHERWISE

Scale 1:2	Technical reference	Created by asf xcvb	Approved by
		Document type	Document status
		Title Genesis assembly	DWG No.
			Rev. / Date of issue / Sheet 1/1

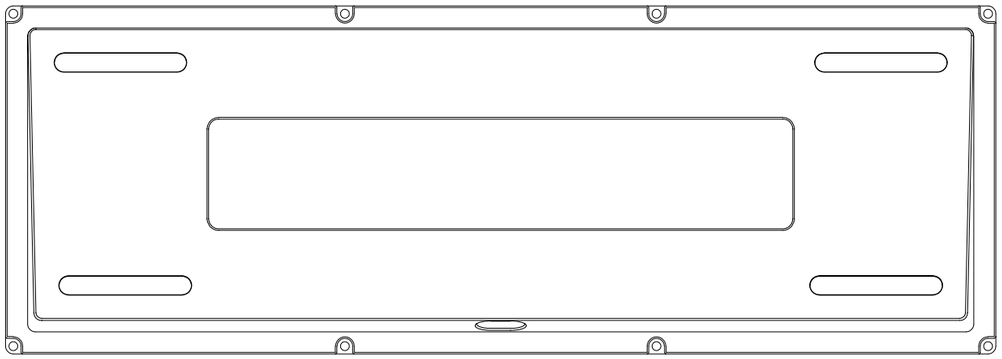

THREADED CALLOUTS

A: Ø2.1 ↧4
M2.5x0.45 ↧3

B: Ø1.6 ↧5
M2x0.4 ↧4

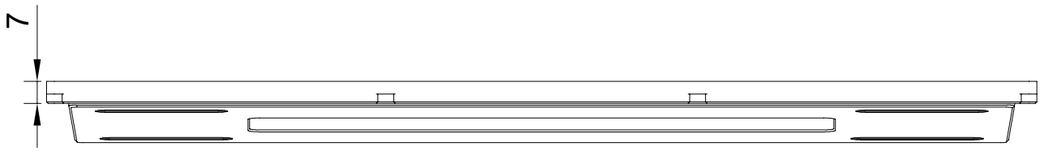

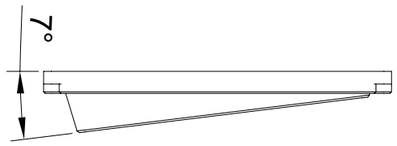

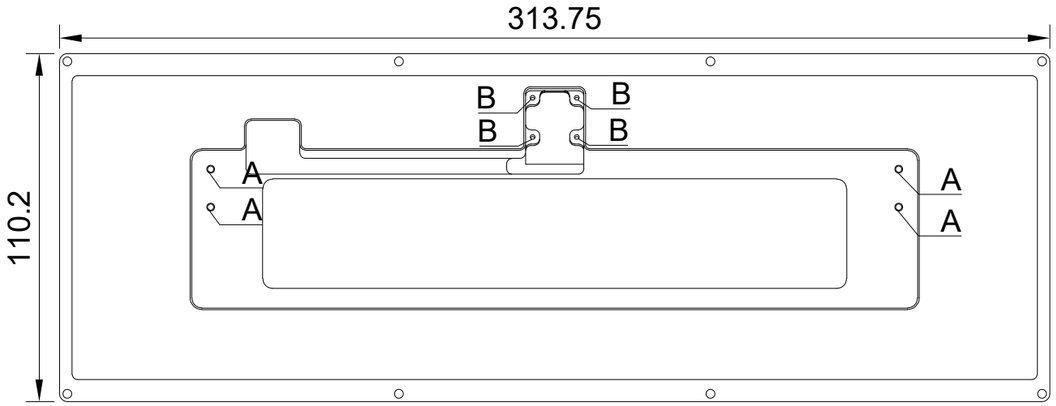

NOTES:

1. THIS DRAWING IS AN OVERVIEW, PLEASE REFER TO 3D MODEL FOR DETAILS
2. ALL UNITS ARE IN MM UNLESS SPECIFIED OTHERWISE
3. ALL TOLERANCES ARE ±0.125 MM UNLESS SPECIFIED OTHERWISE

Scale 1:2	Technical reference	Created by asf xcvb	Approved by
		Document type	Document status
		Title Genesis bottom	DWG No.
			Rev. / Date of issue / Sheet 1/1

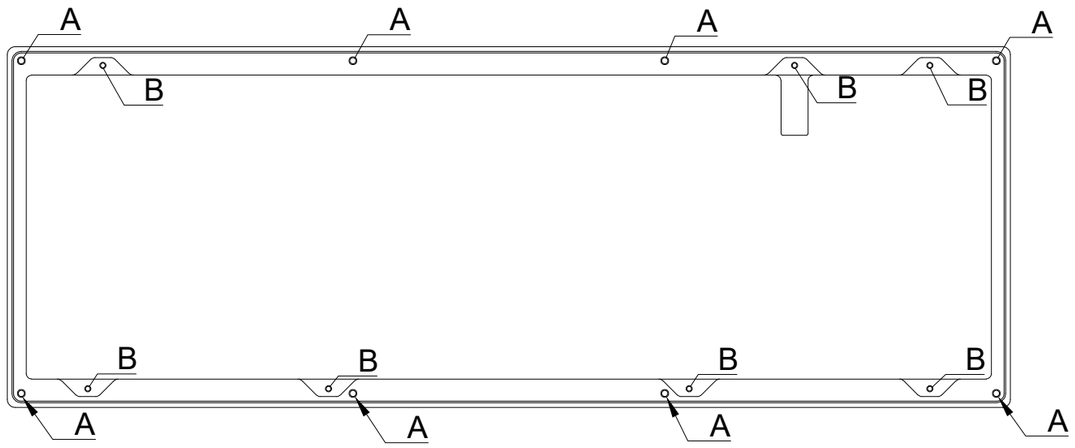

THREADED CALLOUTS

A: Ø2.1 ↧6
M2.5x0.45 ↧5

B: Ø1.6 ↧5
M2x0.4 ↧4

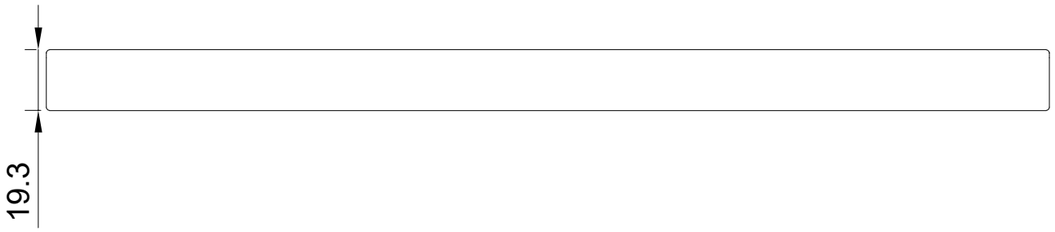

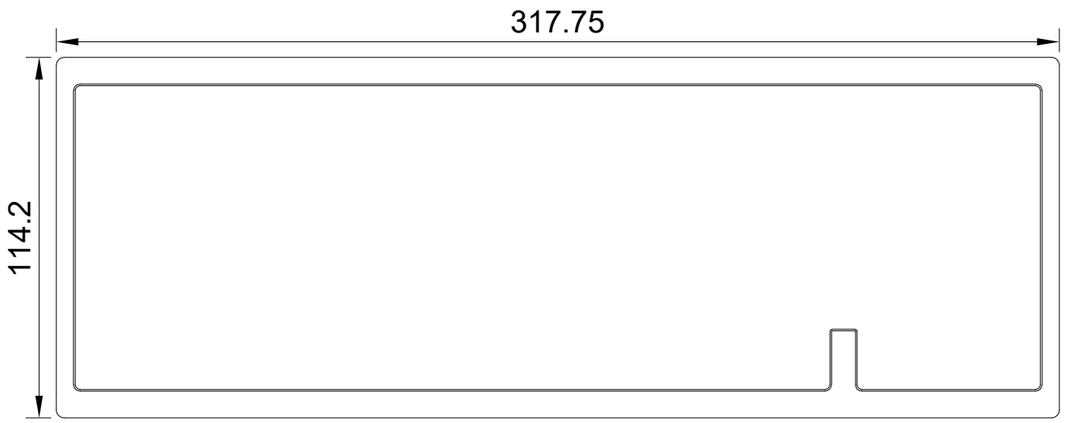

NOTES:

1. THIS DRAWING IS AN OVERVIEW, PLEASE REFER TO 3D MODEL FOR DETAILS
2. ALL UNITS ARE IN MM UNLESS SPECIFIED OTHERWISE
3. ALL TOLERANCES ARE ±0.125 MM UNLESS SPECIFIED OTHERWISE

Scale	Technical reference	Created by	Approved by	
1:2		asf xcvb		
		Document type	Document status	
		Title Genesis top	DWG No.	
			Rev. / Date of issue	Sheet 1/1