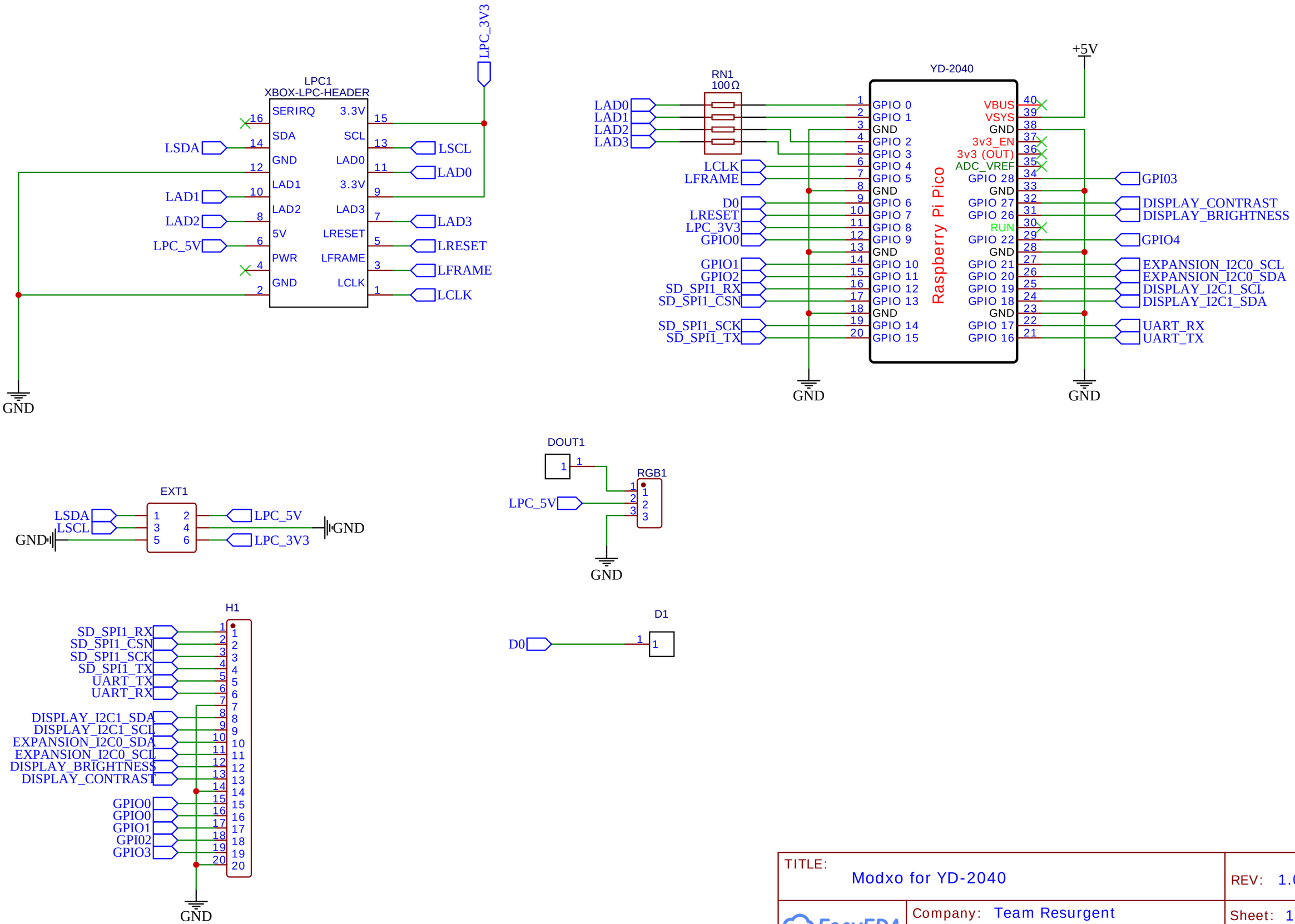

TITLE: Modxo for YD-2040	REV: 1.0
Company: Team Resurgent	Sheet: 1/1
Date: 2024-07-29 Drawn By: EqUiNoX	

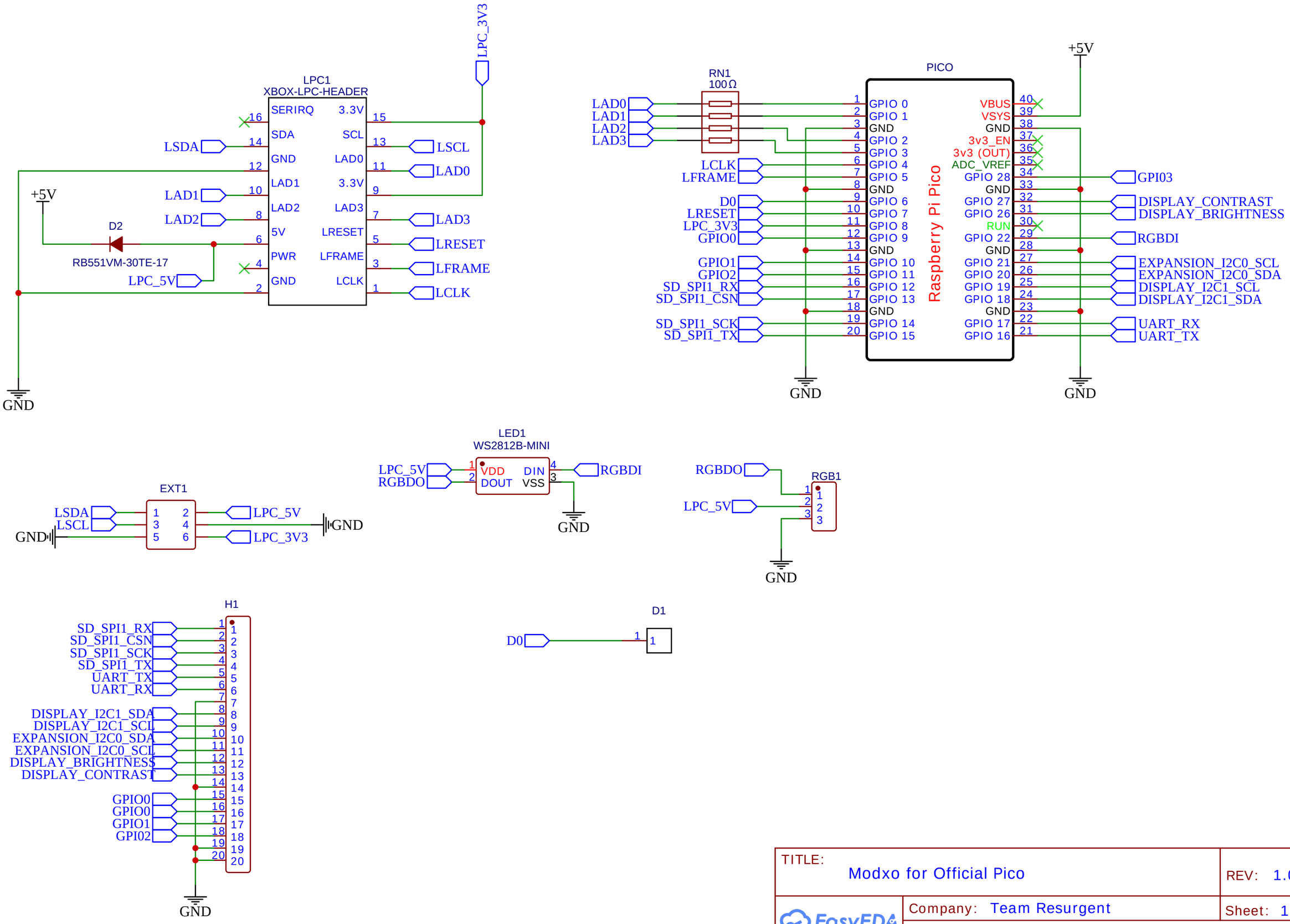

TITLE: Modxo for Official Pico	REV: 1.0
EasyEDA — Company: Team Resurgent	Sheet: 1/1
Date: 2024-07-29 Drawn By: EqUiNoX	