# Midterm Review — Full DSM Solution Walkthrough

In this review, we go step-by-step through a full midterm-style problem.

For each part:

- First, the **handwritten solution** (as it might appear during an exam)
- Then, the **clean, structured mathematical solution**

## Part III: Direct Stiffness Calculation

1. **(40 points)** Solve the indeterminate truss structure shown below using the Direct Stiffness Method, following the procedure presented in class. Clearly show all steps and ensure that units are handled consistently throughout.

**CAREFUL OF UNITS!**

- 0.981

a) (5 points) Using the given geometry, node numbering, and element connectivity, compute the element-level global stiffness matrices for both elements. Element 1 connects Node 1 → Node 2, and Element 2 connects Node 3 → Node 2.

b) (5 points) Assemble the global stiffness matrix by performing the scatter–add procedure based on mapping.

c) (5 points) Partition the global stiffness matrix into free and restrained degrees of freedom. Arrange each partition so that the DOFs are sequential.

d) (10 points) Solve for the unknown displacements at the free node. This will require solving a 2×2 linear system.

e) (5 points) Determine the reaction forces at the restrained nodes.

f) (5 points) Verify that global static equilibrium is satisfied.

g) (5 points) Compute the axial force in Element 2. Although this could be obtained from statics once e) is solved, determine the force using the backward-pass procedure discussed in class.

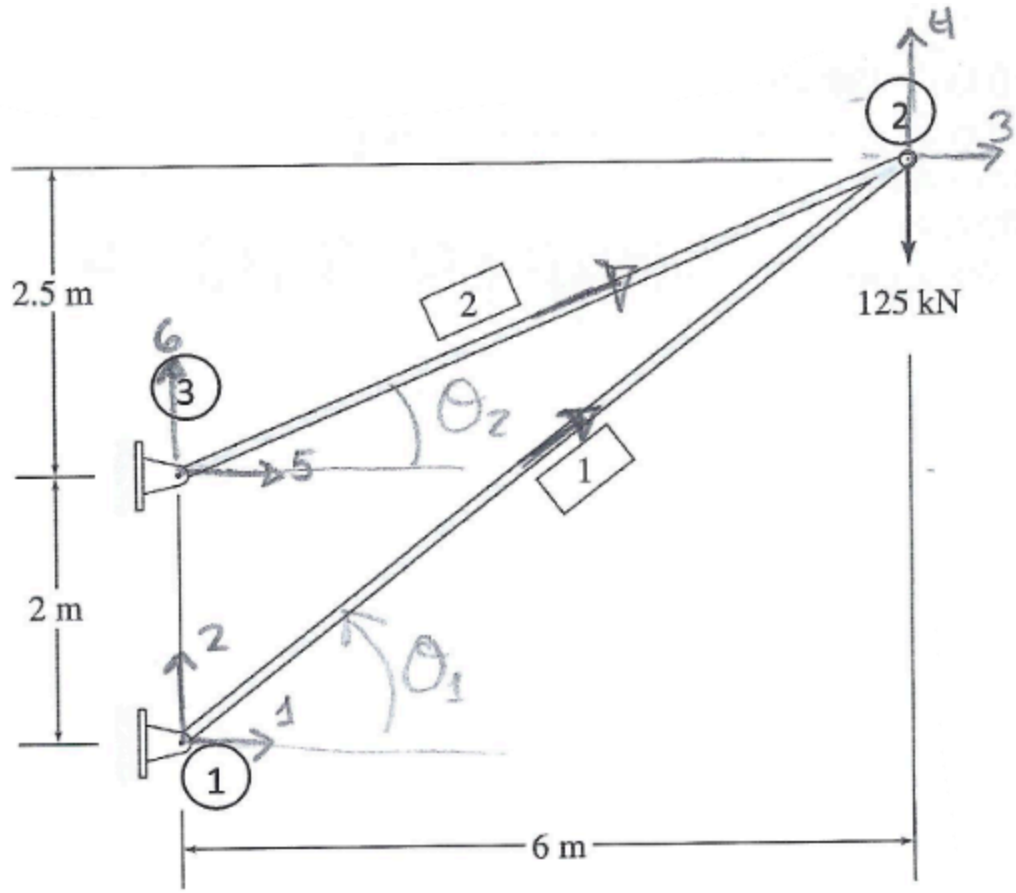


$EA$ = constant
$E$ = 200 GPa
$A$ = 5,000 mm$^2$

# (a) Element-Level Global Stiffness Matrices

Element 1: Node 1 → Node 2

Element 2: Node 3 → Node 2

$$\frac{EA}{L_1} = \frac{200 \times 5000}{7500} = 133.33\,\mathrm{kN/mm}$$

$$\frac{EA}{L_2} = \frac{200 \times 5000}{6500} = 153.85\,\mathrm{kN/mm}$$

# Handwritten Work

$$K_g^{(e)} = \frac{EA}{L}\begin{bmatrix} c^2 & cs & -c^2 & -cs \\ & s^2 & -cs & -s^2 \\ & & c^2 & cs \\ \text{sym} & & & s^2 \end{bmatrix} \text{ use this}$$

| Element | L (m) | $\theta$ | c | s |
|---|---|---|---|---|
| 1 | 7.5<br>7500mm | 36.87 | +0.8 | +0.6 |
| 2 | 6.5<br>6500mm | 22.61 | +0.9231 | +0.3846 |

$$\frac{EA}{L_1} = \frac{200\frac{kN}{mm^2}\cdot 5000mm^2}{7500mm} = 133.33\frac{kN}{mm}$$

$$\frac{EA}{L_2} = \frac{200\cdot 5000}{6500} = 153.85\frac{kN}{mm}$$

$$k_g^{(1)} = 133.33 \begin{bmatrix} 0.640 & 0.480 & -0.640 & -0.480 \\ & 0.360 & -0.480 & -0.360 \\ \text{sym} & & 0.640 & 0.480 \\ & & & 0.360 \end{bmatrix} = \begin{array}{c} \begin{array}{cccc} 1 & 2 & 3 & 4 \end{array} \\ \begin{bmatrix} 85.33 & 64.00 & -85.33 & -64.00 \\ & 48.00 & -64.00 & -48.00 \\ \text{sym} & & 85.33 & 64.00 \\ & & & 48.00 \end{bmatrix} \end{array} \begin{array}{c} 1 \\ 2 \\ 3 \\ 4 \end{array}$$

$$k_g^{(2)} = 153.85 \begin{bmatrix} 0.8521 & 0.3550 & -0.8521 & -0.3550 \\ & 0.1479 & -0.3550 & -0.1479 \\ & & 0.8521 & 0.3550 \\ \text{sym} & & & 0.1479 \end{bmatrix} = \begin{array}{c} \begin{array}{cccc} 5 & 6 & 3 & 4 \end{array} \\ \begin{bmatrix} 131.10 & 54.62 & -131.10 & -54.62 \\ & 22.75 & -54.62 & -22.75 \\ & & 131.10 & 54.62 \\ \text{sym} & & & 22.75 \end{bmatrix} \end{array} \begin{array}{c} 5 \\ 6 \\ 3 \\ 4 \end{array}$$

## Final Matrices

$$\mathbf{k}^{(1)} = \begin{bmatrix} 85.33 & 64.00 & -85.33 & -64.00 \\ 64.00 & 48.00 & -64.00 & -48.00 \\ -85.33 & -64.00 & 85.33 & 64.00 \\ -64.00 & -48.00 & 64.00 & 48.00 \end{bmatrix}$$

$$\mathbf{k}^{(2)} = \begin{bmatrix} 131.10 & 54.62 & -131.10 & -54.62 \\ 54.62 & 22.75 & -54.62 & -22.75 \\ -131.10 & -54.62 & 131.10 & 54.62 \\ -54.62 & -22.75 & 54.62 & 22.75 \end{bmatrix}$$

# (b) Global Assembly

## Handwritten Work

b)

| 1 | 2 | 3 | 4 | 5 | 6 | |
|---|---|---|---|---|---|---|
| 85.33 | 64 | -85.33 | -64 | 0 | 0 | 1 |
| 64 | 48 | -64 | -48 | 0 | 0 | 2 |
| -85.33 | -64 | 85.33 +131.1 = 216.43 | 64+54.62 = 118.62 | -131.10 | -54.62 | 3 |
| -64 | -48 | 64+54.62 = 118.62 | 48+22.75 = 70.75 | -54.62 | -22.75 | 4 |
| 0 | 0 | -131.10 | -54.62 | 131.10 | 54.62 | 5 |
| 0 | 0 | -54.62 | -22.75 | 54.62 | 22.75 | 6 |

## Final Global Matrix

$$\mathbf{K} = \begin{bmatrix} 85.33 & 64.00 & -85.33 & -64.00 & 0 & 0 \\ 64.00 & 48.00 & -64.00 & -48.00 & 0 & 0 \\ -85.33 & -64.00 & 216.43 & 118.62 & -131.10 & -54.62 \\ -64.00 & -48.00 & 118.62 & 70.75 & -54.62 & -22.75 \\ 0 & 0 & -131.10 & -54.62 & 131.10 & 54.62 \\ 0 & 0 & -54.62 & -22.75 & 54.62 & 22.75 \end{bmatrix}$$

# (c) Partition the Matrix

## Handwritten Work

c) DOF 3 & 4 are free, swap rows and columns 1 & 2 with 3 & 4

$$
\begin{array}{c}
\begin{array}{cccccc} 3 & 4 & 1 & 2 & 5 & 6 \end{array} \\
\left[\begin{array}{cc|cccc}
216.43 & 118.62 & -85.33 & -64 & -131.10 & -54.62 \\
118.62 & 70.75 & -64 & -48 & -54.62 & -22.75 \\
\hline
-85.33 & -64 & 85.33 & 64 & 0 & 0 \\
-64 & -48 & 64 & 48 & 0 & 0 \\
-131.10 & -54.62 & 0 & 0 & 131.10 & 54.62 \\
-54.62 & -22.75 & 0 & 0 & 54.62 & 22.75
\end{array}\right]
\end{array}
\begin{array}{c} 3 \\ 4 \\ 1 \\ 2 \\ 5 \\ 6 \end{array}
\qquad
\left[\begin{array}{c|c} k_{ff} & k_{fr} \\ \hline k_{rf} & k_{rr} \end{array}\right]
$$

$$
\mathbf{K} = \left[\begin{array}{cc|cccc}
216.43 & 118.62 & -85.33 & -64.00 & -131.10 & -54.62 \\
118.62 & 70.75 & -64.00 & -48.00 & -54.62 & -22.75 \\
\hline
-85.33 & -64.00 & 85.33 & 64.00 & 0 & 0 \\
-64.00 & -48.00 & 64.00 & 48.00 & 0 & 0 \\
-131.10 & -54.62 & 0 & 0 & 131.10 & 54.62 \\
-54.62 & -22.75 & 0 & 0 & 54.62 & 22.75
\end{array}\right]
$$

# (d) Solve for Unknown Displacements

## Handwritten Work

d) ① $216.43u_3 + 118.62u_4 = 0$ $\Leftarrow$ $k_{ff} \cdot u_f = f_f$

② $118.62u_3 + 70.75u_4 = -125$

① $u_3 = -0.5481\,u_4$

$u_3 = -0.5481(-21.80)$

$= 11.95$ mm

① → ② $118.62(-0.5481u_4) + 70.75u_4 = -125$

$u_4 = -21.80$ mm

$$
\begin{aligned}
&(1) \quad 216.43\,u_3 + 118.62\,u_4 = 0 \\
&(2) \quad 118.62\,u_3 + 70.75\,u_4 = -125
\end{aligned}
$$

# (e) Reaction Forces

## Handwritten Work

e) $\begin{bmatrix} -85.33 & -64 \\ -64 & -48 \\ -131.1 & -54.62 \\ -54.62 & -22.75 \end{bmatrix} \begin{Bmatrix} +11.95 \\ -21.80 \end{Bmatrix}$

$-85.33 \cdot 11.95 - 64 \cdot -21.80 = +375.5 \quad R_1$

$= -64 \cdot 11.95 - 48 - 21.80 = +281.6 \quad R_2$

$-131.1 \cdot 11.95 - 54.62 \cdot 21.80 = -375.9 \quad R_5$

$-54.62 \cdot 11.95 - 22.75 \cdot -21.80 = -156.8 \quad R_6$

$$R_1 = 375.5, \quad R_2 = 281.6$$

$$R_5 = -375.9, \quad R_6 = -156.8$$

# (f) Global Equilibrium Check

## Handwritten Work

f) $\uparrow + \Sigma F_y = 0 = +281.6 - 156.8 - 125 = -0.2 \approx 0$

$\xrightarrow{+} \Sigma F_x = 0 = 375.5 - 375.9 = -0.4 \approx 0$

$$\sum F_y = 281.6 - 156.8 - 125 \approx 0$$

$$\sum F_x = 375.5 - 375.9 \approx 0$$

Small residuals are due to rounding.

# (g) Backward Pass — Axial Force

## Handwritten Work

g) $\{u_e\} = \begin{Bmatrix} 0 \\ 0 \\ +11.95 \\ -21.80 \end{Bmatrix} \begin{matrix} 1 \\ 2 \\ 3 \\ 4 \end{matrix}$ $\quad \{u_e'\} = [T] \cdot \{u_e\}$

$$[T] = \begin{bmatrix} c & s & 0 & 0 \\ -s & c & 0 & 0 \\ 0 & 0 & c & s \\ 0 & 0 & -s & c \end{bmatrix}$$

this is for element #1

$$\{u_e'\} = \begin{bmatrix} 0.8 & 0.6 & 0 & 0 \\ -0.6 & 0.8 & 0 & 0 \\ 0 & 0 & 0.8 & 0.6 \\ 0 & 0 & -0.6 & 0.8 \end{bmatrix} \begin{Bmatrix} 0 \\ 0 \\ +11.95 \\ -21.80 \end{Bmatrix} = \begin{Bmatrix} 0 \\ 0 \\ -3.52 \\ -24.61 \end{Bmatrix}$$

local

$$\{f_e'\} = [K_e'] \cdot \{u_e'\} = \begin{bmatrix} 133.33 & 0 & -133.33 & 0 \\ 0 & 0 & 0 & 0 \\ -133.33 & 0 & 133.33 & 0 \\ 0 & 0 & 0 & 0 \end{bmatrix} \begin{Bmatrix} 0 \\ 0 \\ -3.52 \\ -24.61 \end{Bmatrix} = \begin{Bmatrix} +469.3 \\ 0 \\ -469.3 \\ 0 \end{Bmatrix}$$

$f_1' \rightarrow \quad \leftarrow f_3'$

compression makes sense!

$$\{f_e'\} = \begin{Bmatrix} 469.3 \\ 0 \\ -469.3 \\ 0 \end{Bmatrix}$$

Element is in compression.