Air Quality Monitoring

Microproject Report

Submitted by:
Brahmadath.S

Project Repository: Air Quality Monitoring

1. Introduction and Objectives

With rising urbanization and industrial activity, monitoring air quality has become a critical necessity for public health. Poor indoor air quality, often caused by the accumulation of Carbon Dioxide (CO_2), Ammonia (NH_3), Benzene, and Smoke, can lead to significant respiratory issues and reduced cognitive function.

This project aims to develop a low-cost, real-time Air Quality Monitoring System utilizing the NodeMCU (ESP8266) microcontroller and the MQ-135 Gas Sensor. The MQ-135 is specifically designed to detect a wide range of harmful gases in the atmosphere. By leveraging the built-in Wi-Fi capabilities of the NodeMCU, the system can transmit live sensor data to IoT platforms like Blynk, allowing users to monitor their environment remotely via a smartphone or web dashboard.

Objectives:

- **Continuous Air Quality Monitoring:** Accurately measure the concentration of various air pollutants such as Ammonia (NH_3), Alcohol, Benzene, Smoke, and Carbon Dioxide (CO_2) using the MQ-135 sensor.
- **IoT Integration:** Utilize the NodeMCU (ESP8266) for wireless data transmission to the Blynk IoT platform.
- **Remote Surveillance:** Enable real-time monitoring of air quality levels via a cloud-based dashboard on a mobile device or web interface.

2. Block Diagram and Explanation

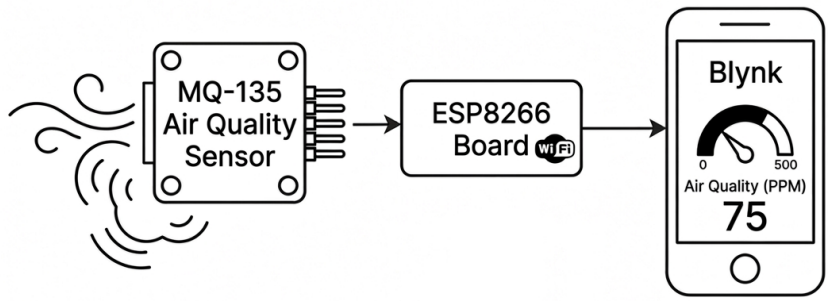

Figure 1: Block Diagram of Air Quality Monitoring System

The block diagram above illustrates the overall architecture of the Air Quality Monitoring System.Explanation: The soil moisture sensor detects the water content and sends an analog signal to the NodeMCU. The NodeMCU processes and transmits data to the Blynk cloud through Wi-Fi. 1 The Blynk app displays the moisture level on a gauge.

3. Circuit Diagram And Components

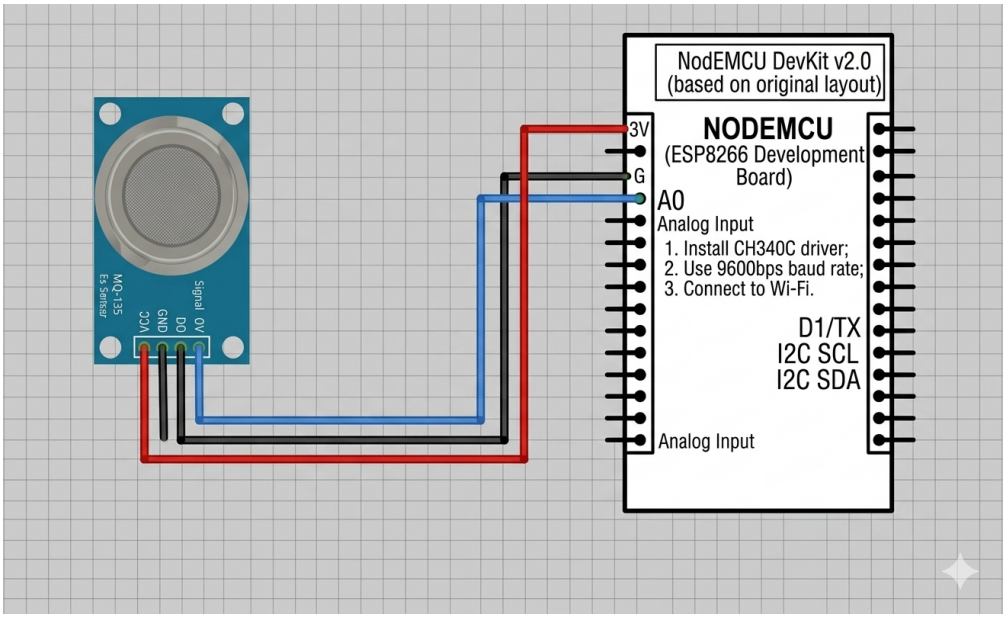

Figure 1: Circuit Diagram and Components

Components Required article [utf8]inputenc booktabs geometry a4paper, margin=1in

1. List of Components

- **Microcontroller:** NodeMCU (ESP8266) DevKit V2.0.
- **Gas Sensor:** MQ-135 Air Quality Sensor.
- **Connecting Wires:** Female-to-Female Jumper Wires (3 units).
- **Power Supply:** Micro-USB Cable (5V DC).

4. Code and Interfacing Logic

Table 1: MQ-135 Sensor to NodeMCU Pin Mapping

MQ-135 Pin	**NodeMCU Pin**	**Description**
A0 (Analog Out)	A0	Analog Signal Output
VCC	3V	Power Supply
GND	GND	Common Ground

Code Description

- Configures Wi-Fi and Blynk credentials to establish a stable cloud connection for remote monitoring.
- Utilizes the `A0` pin for analog data acquisition, with the MQ-135 sensor powered via the NodeMCU's **3V** and **GND** rails.
- Reads the analog output voltage from the sensor, which corresponds to the concentration of gases in the environment.
- Processes raw 10-bit analog signals and maps them into a user-friendly percentage scale (**0–100%**).
- Transmits real-time air quality data to the Blynk mobile application via **Virtual Pin V0**.

5. Working Model

Figure 2: Working Model

Conclusion

The IoT-based Air Quality Monitoring system was successfully implemented using the NodeMCU and MQ-135 sensor. By interfacing the sensor with the Blynk cloud platform, real-time air quality data was effectively monitored and visualized. The system demonstrated reliable performance in detecting gas concentration levels and successfully triggered automated alerts and relay actions when the air quality exceeded the defined 30% threshold. This project provides a cost-effective and scalable solution for localized environmental monitoring and automated air quality control.