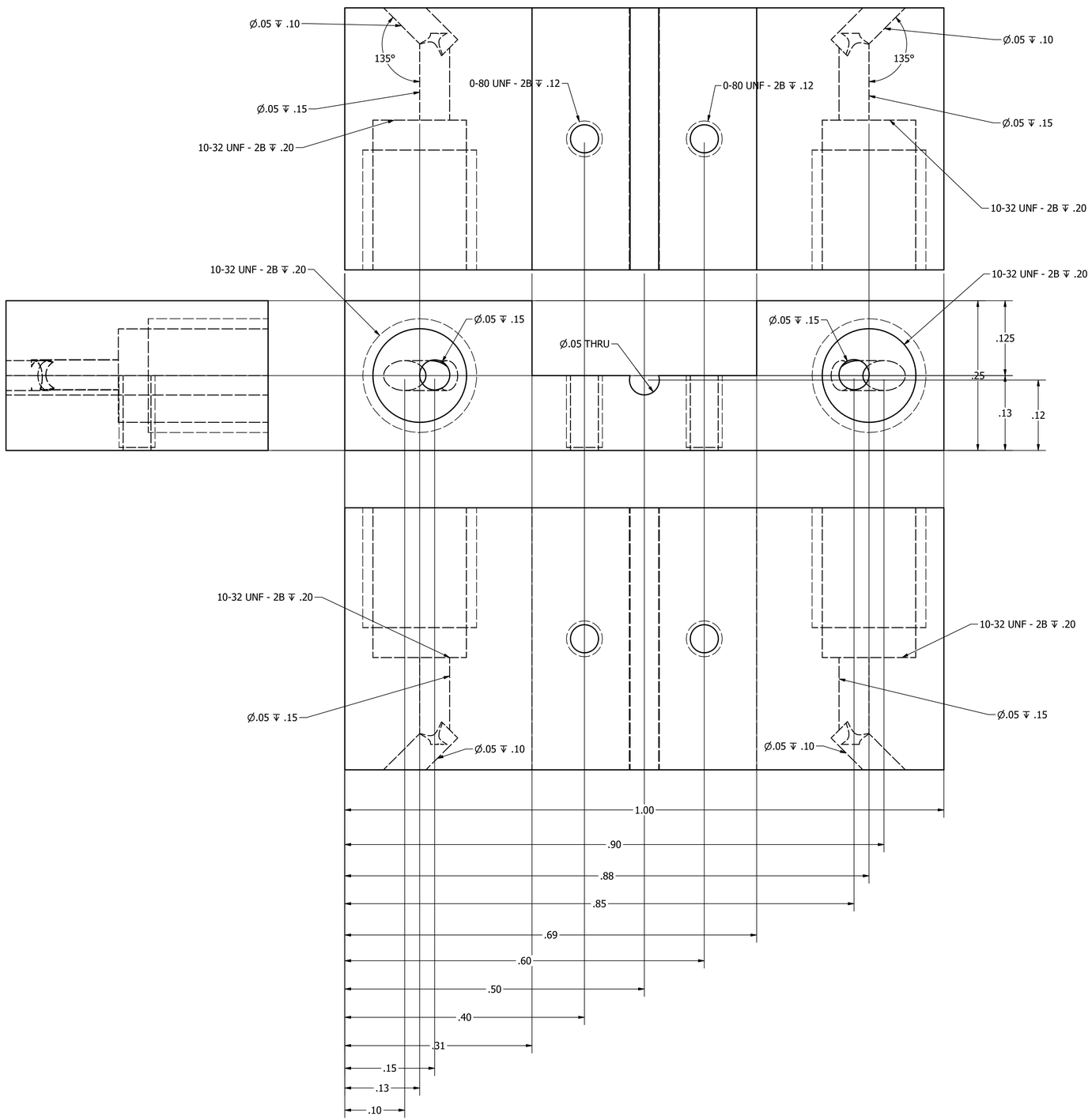

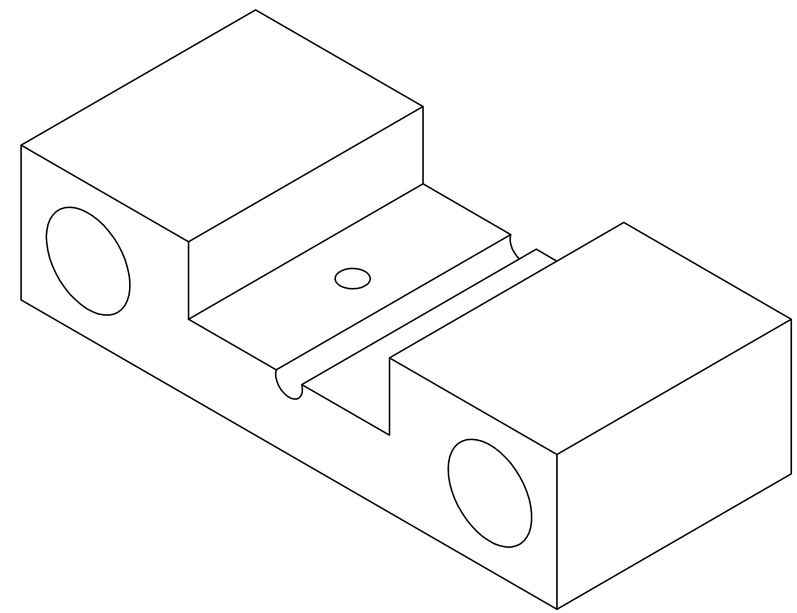

DRAWN Juan Luna	7/13/2021	BRAIN CoGS Princeton Neuroscience Institute
CHECKED		TITLE
QA		Air puffs delivery
MFG		
APPROVED		SIZE D / DWG NO mVR-ap-001 / REV 1
		SCALE 10 : 1 / SHEET 1 OF 1