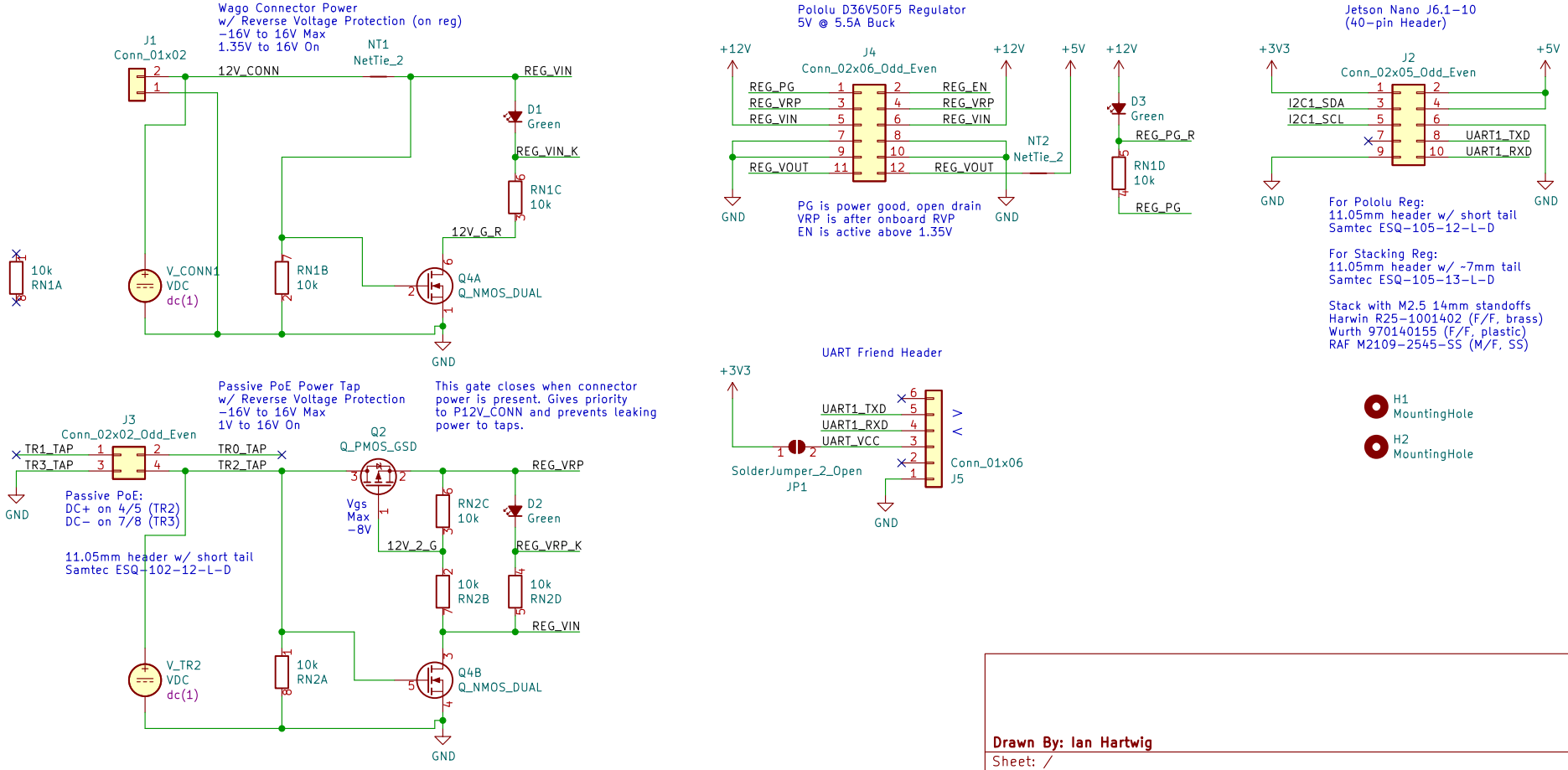

Drawn By: Ian Hartwig

Sheet: /

File: jetson−nano−ppoe.kicad_sch

Title: Jetson Nano PPoE

Size: A4	Date:	**Rev: R1**
KiCad E.D.A. kicad (6.0.5−0)		Id: 1/1