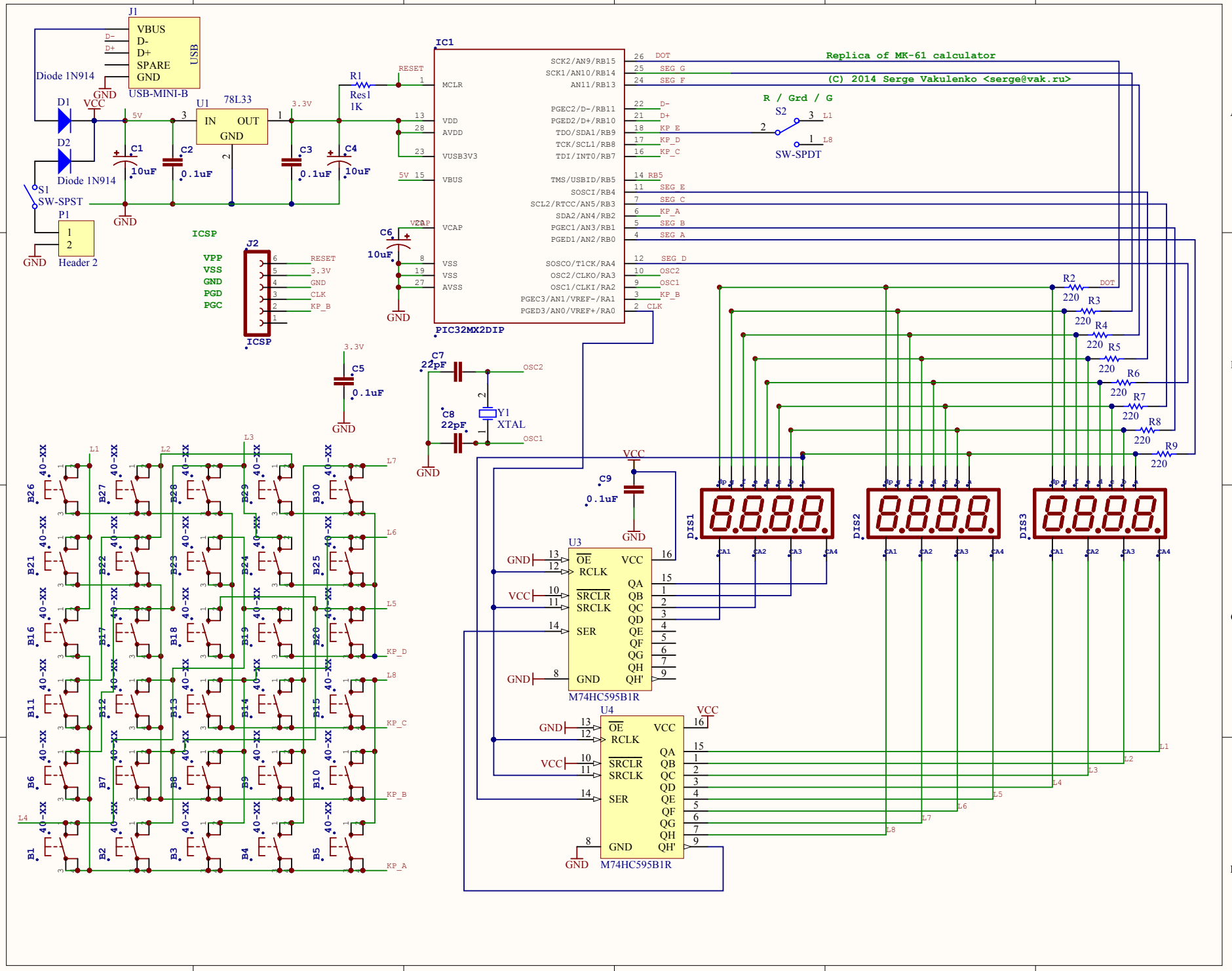
Replica of MK-61 calculator
(C) 2014 Serge Vakulenko <serge@vak.ru>
J1
VBUS
D-
D+
SPARE
GND
USB
USB-MINI-B
Diode 1N914
D1
D2
VCC
GND
U1
78L33
IN
OUT
3.3V
5V
C1
10uF
C2
0.1uF
C3
0.1uF
C4
10uF
S1
SW-SPST
P1
Header 2
R1
Res1
1K
RESET
IC1
MCLR
VDD
AVDD
VUSB3V3
VBUS
VCAP
VSS
AVSS
SCK2/AN9/RB15
SCK1/AN10/RB14
AN11/RB13
PGEC2/D-/RB11
PGED2/D+/RB10
TDO/SDA1/RB9
TCK/SCL1/RB8
TDI/INT0/RB7
TMS/USBID/RB5
SOSCI/RB4
SCL2/RTCC/AN5/RB3
SDA2/AN4/RB2
PGEC1/AN3/RB1
PGED1/AN2/RB0
SOSCO/T1CK/RA4
OSC2/CLKO/RA3
OSC1/CLKI/RA2
PGEC3/AN1/VREF-/RA1
PGED3/AN0/VREF+/RA0
DOT
SEG G
SEG F
D-
D+
KP_E
KP_D
KP_C
RB5
SEG E
SEG C
KP_A
SEG B
SEG A
SEG D
OSC2
OSC1
KP_B
CLK
PIC32MX2DIP
R / Grd / G
S2
SW-SPDT
L1
L8
ICSP
J2
VPP
VSS
GND
PGD
PGC
RESET
3.3V
GND
CLK
KP_B
C6
10uF
C5
0.1uF
C7
22pF
C8
22pF
Y1
XTAL
OSC2
OSC1
R2
R3
R4
R5
R6
R7
R8
R9
220
DIS1
DIS2
DIS3
CA1
CA2
CA3
CA4
C9
0.1uF
U3
U4
M74HC595B1R
OE
RCLK
SRCLR
SRCLK
SER
QA
QB
QC
QD
QE
QF
QG
QH
QH'
L1
L2
L3
L4
L5
L6
L7
L8
KP_D
KP_C
KP_B
KP_A
40-XX
B1
B2
B3
B4
B5
B6
B7
B8
B9
B10
B11
B12
B13
B14
B15
B16
B17
B18
B19
B20
B21
B22
B23
B24
B25
B26
B27
B28
B29
B30

Bottom Layer Top Overlay Keep-Out Layer

Top Layer

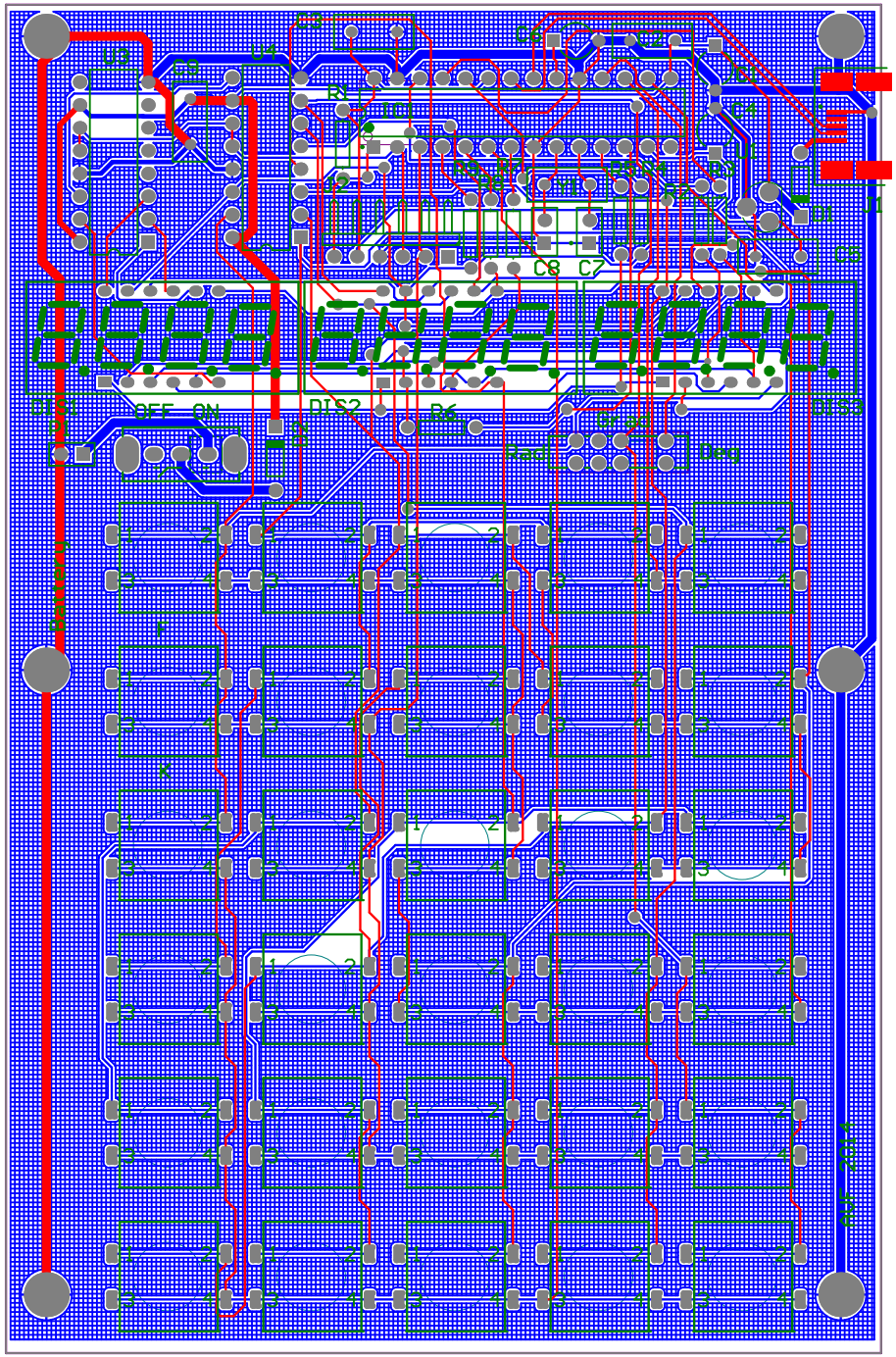

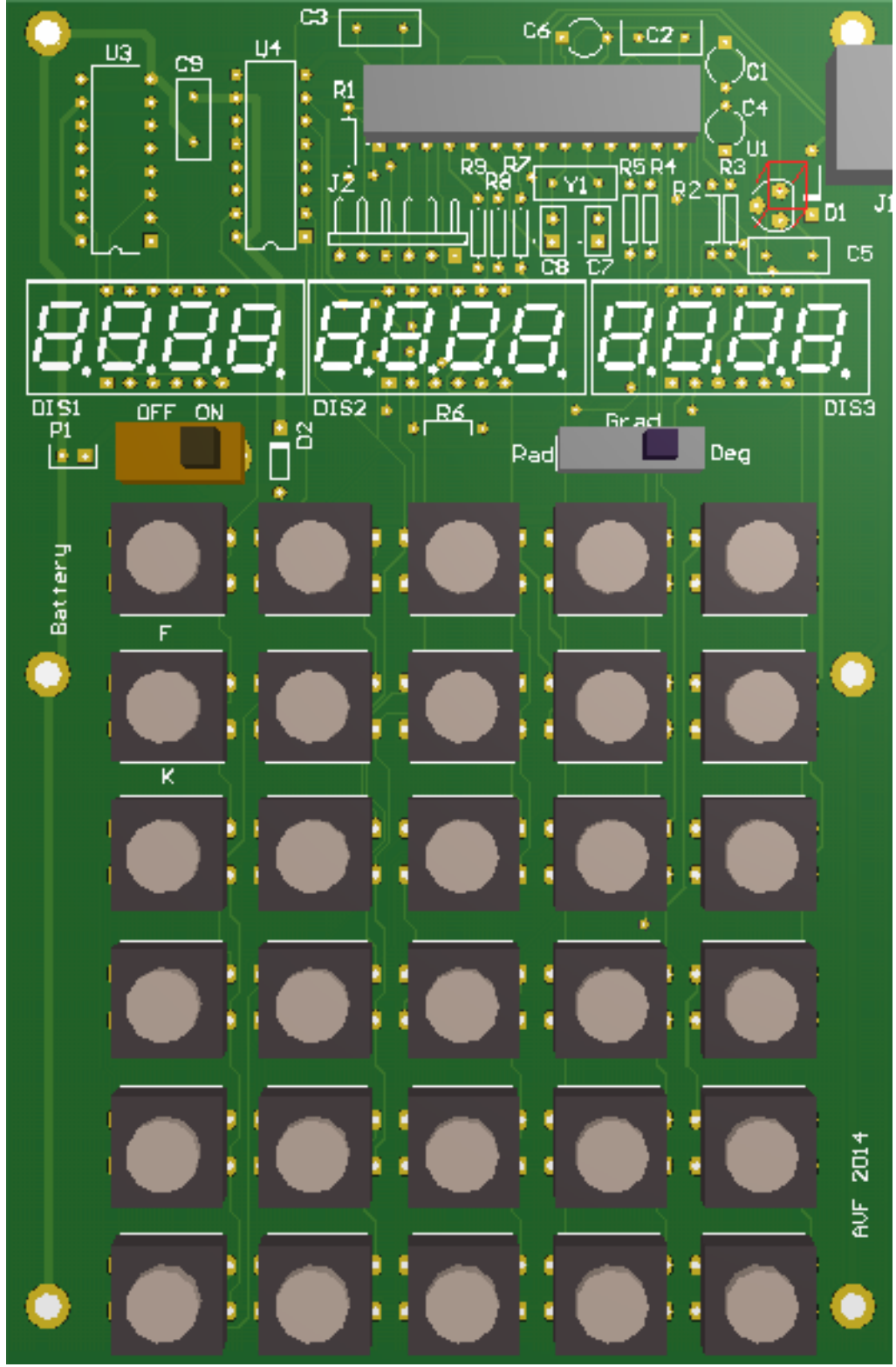
C3
C6
C2
U3
C9
U4
C1
R1
C4
U1
R9
R7
R5
R4
R3
J2
R8
Y1
R2
D1
J1
C8
C7
C5
DIS1
DIS2
DIS3
P1
OFF
ON
D2
R6
Grad
Rad
Deg
Battery
F
K
AVF 2014