ENGINEERING PORTFOLIO

MICHIANA PREMIER EVENT

RAVENTECH

19047-R0121

FACULTATEA DE INGINERIE DIN HUNEDOARA
RAVENTECH
19047 - RO121

APTIV

BRD
FIRST
NATIE
ALOHA

NATIE
BRD
DIVE
INTO THE
STRAIGHT
TUTTA
CRAIOVA

RAVENTECH

RAVENTECH

RAVENTECH - 19047 1 - Team Overview

About us

The RavenTech HD team was founded in 2018 under the name RobotY. In 2021, we rebranded as RavenTech HD due to a generational shift and our strong connection to our city, Hunedoara, located in the heart of Transylvania, Romania. The symbol of the city is the raven, which inspired our name.

Initially, our goal was to develop the highest-performing robot possible. However, as we gained experience, we realized that the mission of the *FIRST* program is to inspire and prepare young people to become the generation that will help build the future.

Team structure

The team is composed of 15 members, 5 mentors, 25 volunteers, and 5 peer mentors, organized into 4 departments:

Hardware: Bogdan, Robert, Rareș, Izabella
CAD: Andreea Z., Iulia, Alex M.
PR: Tudor, Maria, Alexandra, Andreea C.
Software: David, Andrei V., Andrei M., Ștefan

Mentors: Adrian, Mircea, Cristina, Sorin, Imre
Peer Mentors: Andrei Cristian, Răzvan, Marian, Radu

Team history

Over time, our team has continued to grow and evolve. Through our annual participation in the FIRST Tech Challenge competition, we have proudly achieved the following distinctions:

- Innovate Award I – Regionals 2019
- Inspire Award III – Regionals 2021
- Winning Alliance 2nd Pick – Regionals 2019
- Semifinalists at the National Competition in 2019 and 2021
- Innovate Award I – Regionals 2024
- Winning Alliance 1st Pick – Regionals 2024

Our values

Coopertition Innovation Empathy Respect
Gracious Professionalism Originality

Season stats

INSPIRE AWARD III
FINALIST ALLIANCE CAPTAIN
at Regionals

5000+	30	25+
working hours	sponsors & partners	team collaborations

Impact on the community

IMPACT: 270.000+ people

from events, appearances in articles, shows, and posts by important pages, and from social media posts. This season, we organized over 25 events and took part in another 30 events and competitions. We were featured in 20+ articles, shows, and posts by major editorial teams.

Strategic plan

Season goals:

- Field performance: we went through an iterative design and development process, resulting in a robot capable of efficiently completing the game tasks.
- Positive impact in the STEM community: we organized and participated in over 50 events that promote the *FIRST* values.

Sustainability:

- Long-term partnerships: Hunedoara City Hall, Hunedoara Faculty of Engineering, Klass CNC
- Preparing future generations: we coordinate 3 FIRST LEGO League teams.

SWOT Analysis

S Diversity, unity, well-equipped robotics hub.	**W** Small town, inexperienced members.
O Our partnerships and sponsors.	**T** Limited funding opportunities.

Strategy - 2

RAVENTECH - 19047

Tasks analysis

At the beginning of the season, we set out to develop a versatile robot, compatible with any alliance partner, to easily complete all game tasks. We went through multiple iterations of the robot's systems:

- intake: 8 iterations
- outtake: 3 iterations
- climb: 4 iterations
- lift: 4 iterations

We are compatible with alliance partners, having autonomous routines for both samples and specimens. To maximize our contribution in matches, during the endgame period we do a level 2 ascend.

Strategy evolution

At the first League Meet, we focused on scoring in the High Basket during both Autonomous and TeleOp, as it initially appeared to be the most straightforward approach. However, this often conflicted with our alliance partners' strategies, limiting effective collaboration. Also, our vertical slide-based climb system proved too slow, leading us to temporarily remove it.

As we gained experience, we refined our strategy to improve both performance and alliance compatibility. We enhanced our Autonomous mode to better handle samples and specimens and shifted focus to the more challenging task: scoring in the High Chamber.

Current strategy

We've significantly refined our TeleOp strategy. We shifted from bringing all samples to the human player in the first minute and scoring them in the second, to a more dynamic approach:

Now, we focus on collecting a few samples in the initial seconds of TeleOp. This is followed by successive high chamber-to-human player runs, where we simultaneously score and acquire new game elements. This strategy allows for continuous point accumulation and efficient element management throughout the period.

Robot capabilities

Autonomous: 61 points / 35 points

- 5 specimens + 1 sample/ 4 samples - 58/32 p.
- Observation Zone Parking - 3 p.

TeleOp: 203 points / 175 points

- 5 specimens + 1 sample/ 4 samples - auto
- 13 specimens/16 sampled- 130/128 p.
- Level 2 Ascend - 15 p.

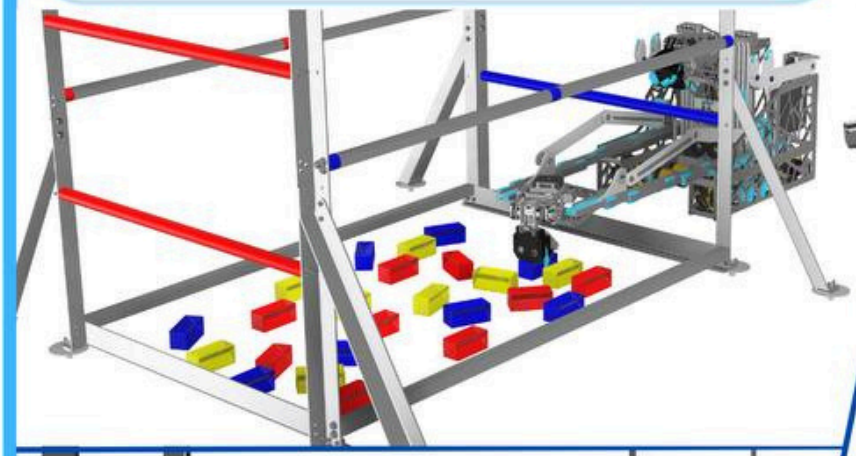

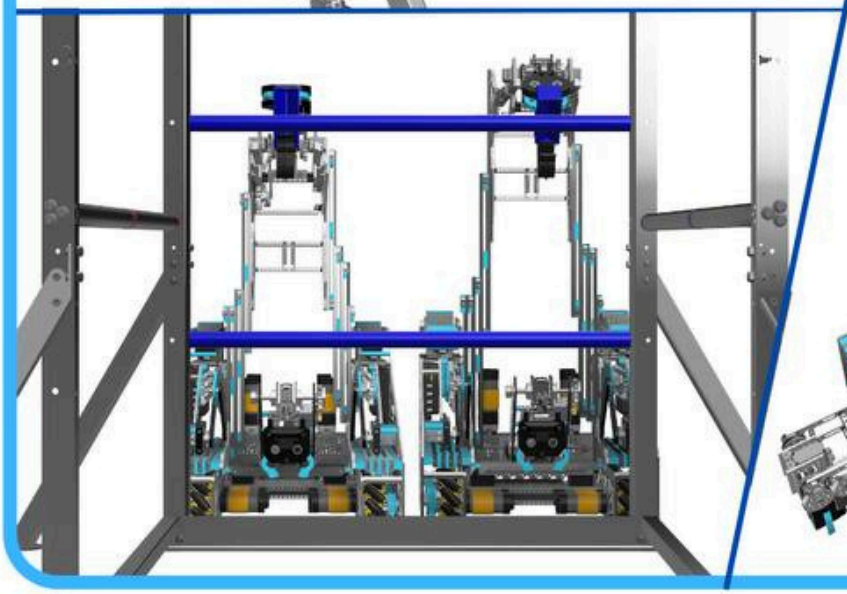

RAVENTECH - 19047 3 - Robot Overview

Outtake

The outtake system consists of an arm powered by two servomotors and a joint, allowing it to collect samples from the intake, place them in the Basket or on the Chamber, and also pick up specimens. At the end of the arm is a 3D-printed claw equipped with a component that ensures the specimen is always positioned optimally. The entire system is mounted on a linear support, enabling specimen placement from greater distances, which saves time and reduces the chassis's travel distance.

Lift

The vertical linear system underwent multiple iterations to achieve the desired balance of weight and speed, significantly reducing extension time. We designed custom components to ensure both strength and reliability.

Climb

For an efficient and fast Level 2 Ascend, we implemented a new hanging system. It uses two motors and self-locking hooks, mounted vertically at the back of the robot. The motors drive the hooks through 1:1 bevel gear sets ensuring a reliable and synchronized climb.

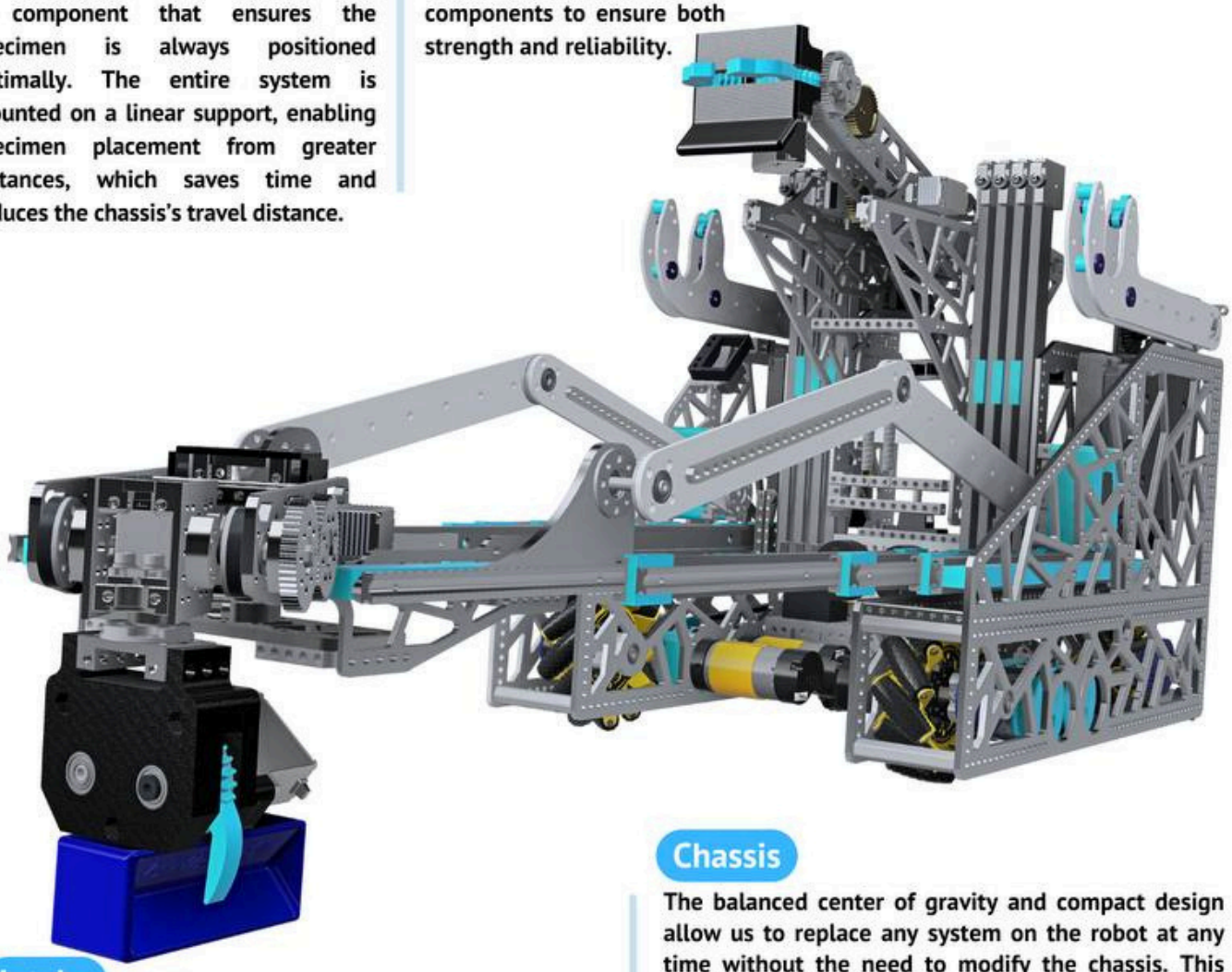

Intake

The intake was designed for the easiest and most efficient collection of samples from the submersible, maximizing its performance with each iteration. Precision is enhanced by the pivot, which allows game elements to be collected from any position on the field, during both autonomous and teleoperated periods, thus ensuring better robot control. We implemented a differential system to gain additional degrees of freedom for the robot's front arm. This is useful during both TeleOp and autonomous periods, allowing us to move the arm in any necessary direction with just two servo motors, while maintaining sufficient force for speed.

Chassis

The balanced center of gravity and compact design allow us to replace any system on the robot at any time without the need to modify the chassis. This facilitates easy maintenance, aided by multiple cutouts in the side panels and overall reduced weight.

Extendo

With a maximum length of 50cm, the linear extension system enables remote sample collection, significantly reducing collection time. Its minimalist design leaves space for other robot systems and simplifies maintenance. We opted against counter-springing or repeatedly tensioned string systems, which improves reliability.

Robot Overview - 4 RAVENTECH - 19047

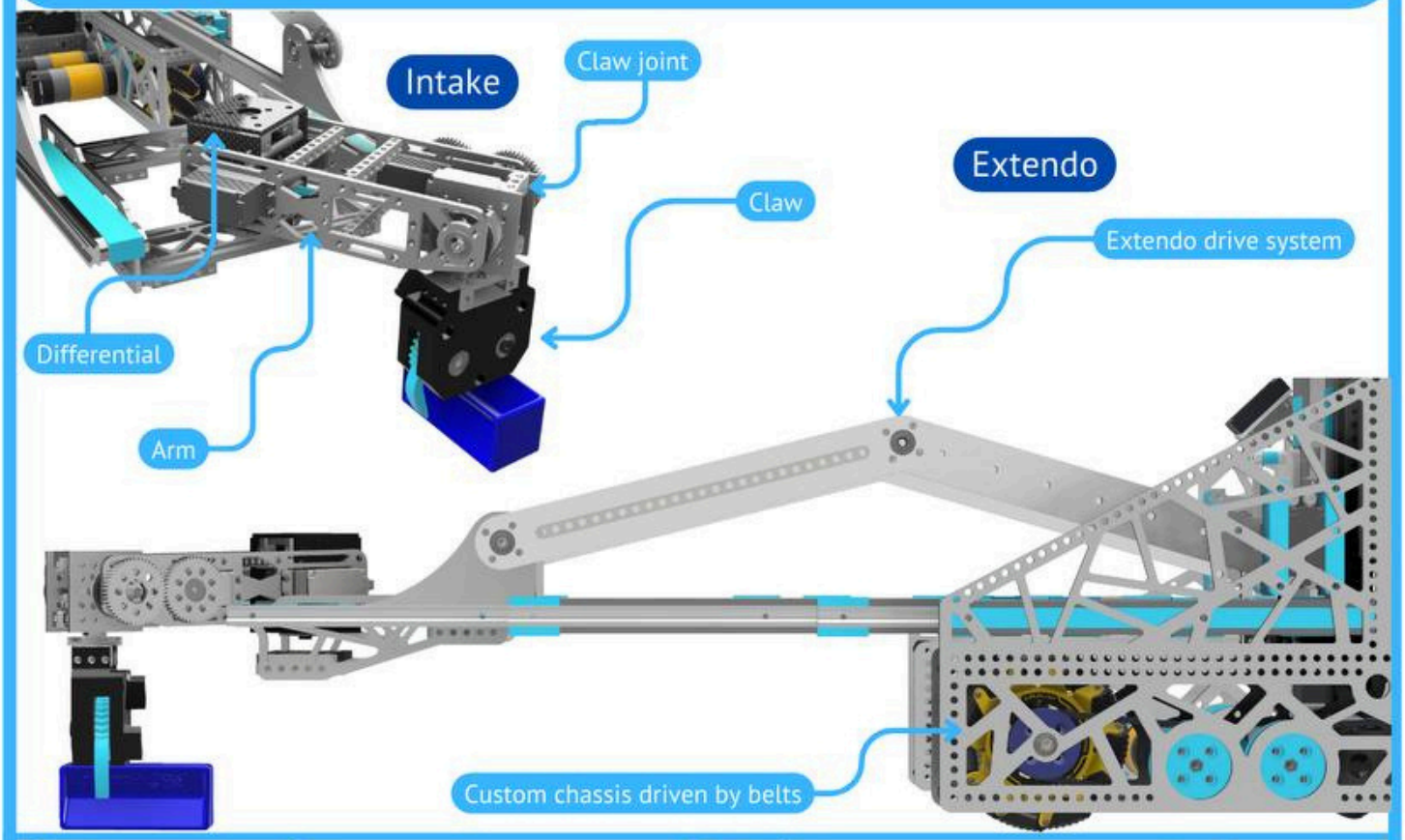

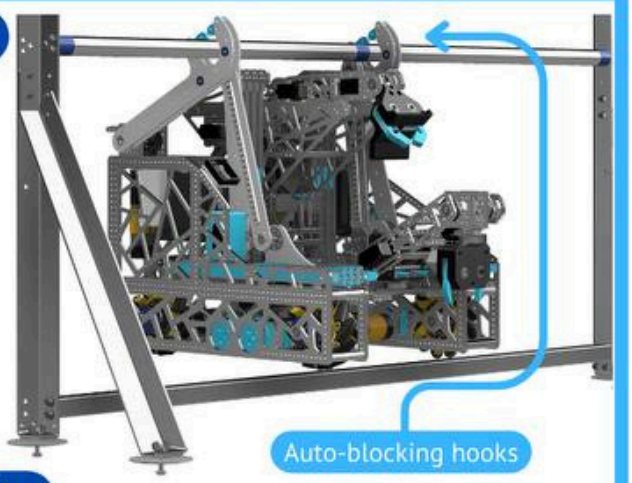

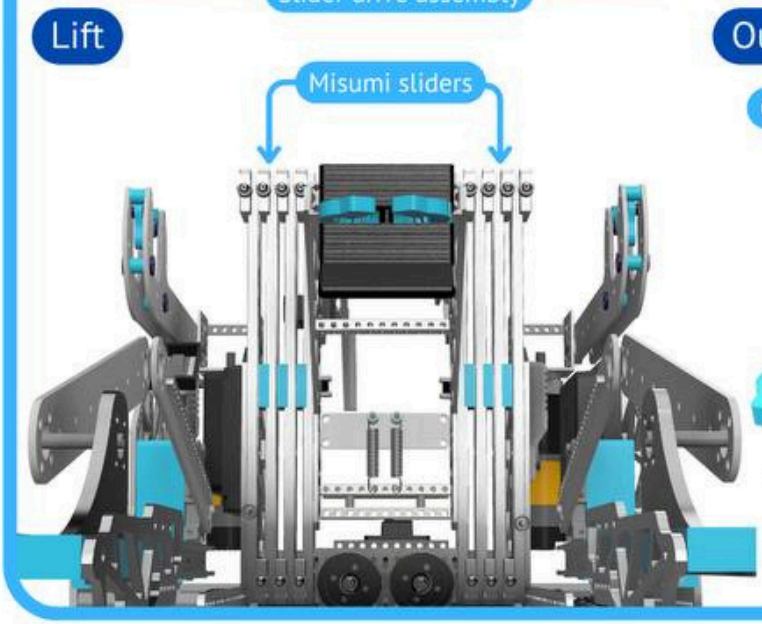

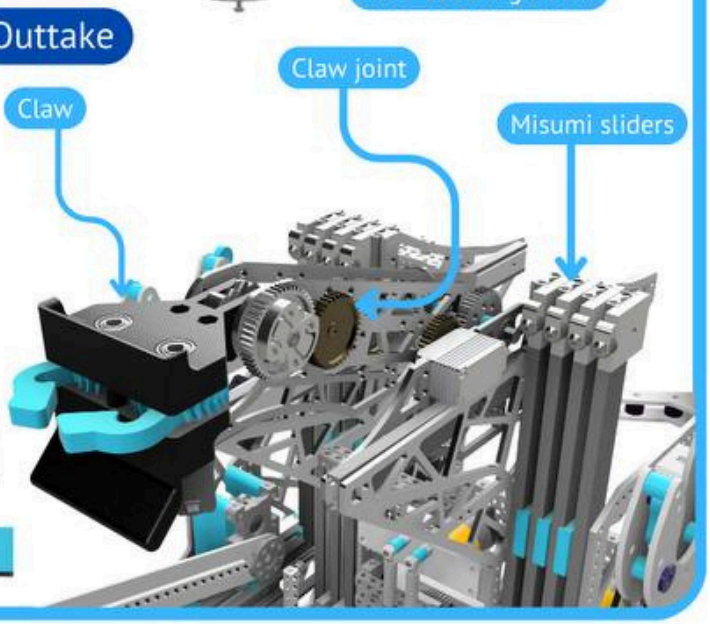

RAVENTECH - 19047 5 - Active Intake

Our initial strategy was based on using an active intake for rapid sample collection. Our goal was to create an efficient system for both collecting and transferring samples. We went through a series of iterations for this type of intake in order to achieve its maximum potential.

Iterative process

Version 1

Our first intake was a bucket-type system, which used a servomotor to pivot over the submersible bar. We used vertical flexible wheels, driven by a servomotor via a chain to collect samples. The laterally collected sample was then transferred from this active intake to the outtake. We included color sensors to detect the sample's type and the ramp included a step that locked the element into a fixed position for transfer.

Version 2

In the second iteration, we implemented a new approach to game element positioning for both the intake and transfer systems. We decided to modify the sample's orientation so it would be picked up and transferred along its length. This change aimed to improve the efficiency of the transfer to the outtake.

Version 3

The intake system was built from three main components: the ramp, the gripping spacer, and the intake cover. We replaced the vertical flexible wheels with horizontal tubing wheels, reducing the system's dimensions.
The intake cover included two servomotors responsible for driving the tubing wheels. We mounted the cover with spacers, increasing visibility inside the intake, a crucial aspect during matches that allowed drivers to better monitor game element capture.

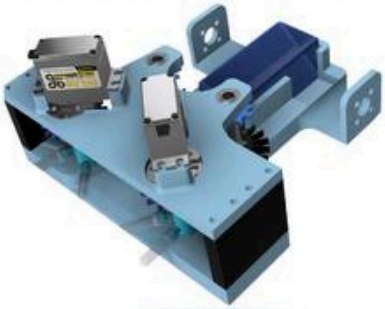

Version 1

- ✓ Low precision requirement for sample collection.
- ✓ Sensor-driven automation: color sensors automated the collection process.
- ✓ Secure positioning: A fixed step stabilized the game element, optimizing outtake transfer.

- ✗ Difficult sample side collection.
- ✗ Inefficient transfer system.
- ✗ Flexible wheels applied too much pressure, jamming game elements.
- ✗ Large model dimensions led to excessively long print times, slowing down prototyping.

Version 2

- ✓ Reduced multi-element pickup errors: improved precision.
- ✓ Optimized transfer system positioning: the new positioning of the sample boosted transfer efficiency.

- ✗ Lack of maneuverability because of the large dimensions.
- ✗ Large model dimensions led to excessively long print times, slowing down prototyping.
- ✗ Reduced visibility of the game elements, making it harder for drivers to monitor collection.

Version 3

- ✓ Optimal visibility for monitoring game element capture during matches.
- ✓ Compact design: it provides space for other systems on the robot and facilitates collection from smaller spaces.

- ✗ Frontal width issues: the intake's excessive front width could hinder game element acquisition, reducing the system's efficiency in certain situations.

Final conclusions

While our early iterations focused on an active intake for speed, its limitations became clear during testing, ultimately leading us to concentrate on designing a claw intake. Despite being fast in some situations, the large dimensions of the active intake that led to a lack of precision and the inability to collect samples from smaller spaces convinced us to start experimenting with another intake concept.

Claw Intake - 6

RAVENTECH - 19047

While designing our claw intake iterations, we retained the advantages of previous versions (especially the speed) while actively working to improve our lacking areas, especially in precision and reducing overall dimensions.

Iterative process

Version 1

To collect samples from the submarine, regardless of their positioning, we adopted a claw intake system. It consisted of a claw equipped with a rotating mechanism, allowing us to pick up samples from any position using the sample-shaped grippers. The claw was attached to an arm which, via a chain, maintained a position parallel to the ground. This feature provided increased control and precision, even in challenging conditions.

Sample collection and transfer time: 4.0 s

Version 2

For the second iteration of our intake, we added a new articulation that facilitated a direct and fast transfer between the claw intake and the claw outtake. This significantly improved the precision, control, and reliability of the transfer, ultimately reducing the time needed for each operation.

2.8 s

Version 3

Our team opted to integrate an AXON Max+ servomotor and furthermore rebuilt the intake arm. To position the arm precisely on the crossbar's center, we utilized two custom 3D-printed components. For maximum strength, we applied a double print layer and flexible polycarbonate to both sides of the arm.

2.2 s

Version 1

- ✓ High precision for sample collection.
- ✓ Reduced servomotor usage: less servomotors mean a lighter, simpler and power efficient system.
- ✗ Slow and inconsistent intake-outtake transfer.

Version 2

- ✓ Optimized intake-outtake transfer, meaning a quicker and more reliable process.
- ✗ Increased weight.
- ✗ Used 2 servomotors.

Version 3

- ✓ Quick transfer.
- ✓ Used a single servomotor for the articulation.
- ✓ Reduced weight.
- ✗ Reduced mobility while collecting.
- ✗ Required chassis movement to collect.

After competing at the West Romania League Tournament, we recognized a critical need for additional degrees of freedom in our intake system. This realization led us to implement a differential intake system.

Version 4

- ✓ Fast sample collection.
- ✓ Improved mobility.
- ✗ Less intuitive programming.

We implemented a differential system driven by two AXON Mini+ servomotors using three 1:1 ratio bevel gears. For a robust and solid construction, we assembled the entire differential within a custom structure made from carbon fiber.

Sample collection and transfer time: 1.9 s

Current version

While keeping the advantages of version 4, we improved the intake system by redesigning the claw grippers. We now have a powerful hold that pushes the sample into the claw case. This way, we boost the stability of the game element within the intake and ensure a very precise transfer.

Sample collection and transfer time: 1.3 s

- ✓ The grippers easily separate samples leading to more effective collection.
- ✗ Less intuitive programming.

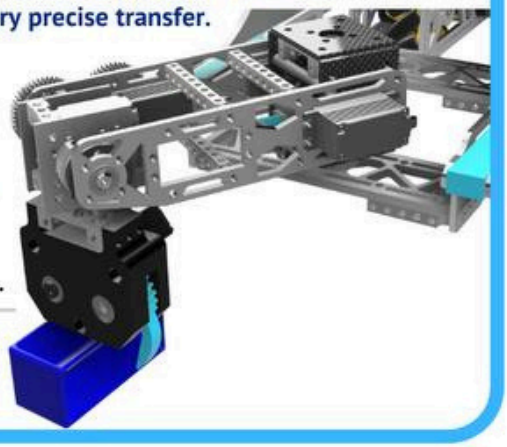

RAVENTECH - 19047

7 - Extendo

Iterative process

Version 1

For more efficient and faster collection of game elements from the submersible, we chose a linear extension system composed of four Misumi segments on each side, connected by custom printed parts. The sliders are mounted on the sides of the robot, not exceeding a total width of 6.4 cm including spacers.

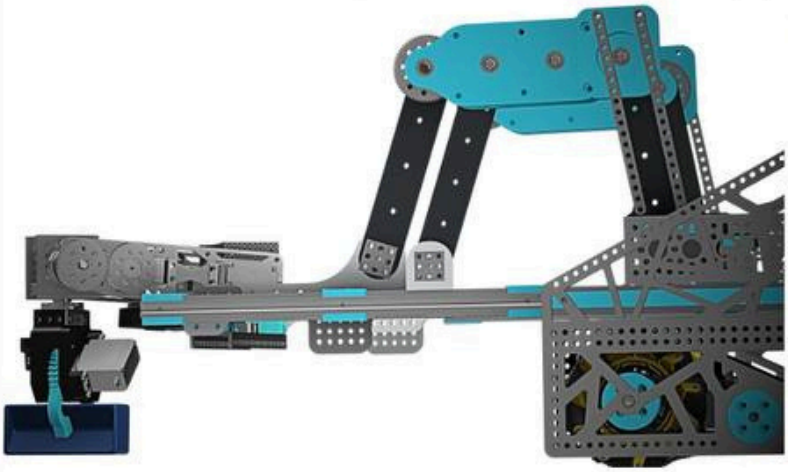

The sliders were mounted on the sides of the robot, not exceeding a total width of 6.4 cm including the spacers. They were driven by AXON Max+ servomotors installed on both sides of the chassis. This high-power servo was chosen to ensure fast and efficient extension without the risk of jams or loss of force during movement.

The mechanism consists of four gears attached to two printed plates measuring 20 cm in length and 7 cm in width. The plates are positioned 16 cm above the initial level of the sliders.

✓ Compact system.

✗ Increased weight.

✗ Difficult-to-perform maintenance.

Current version

After the national competition, we chose a new extension mechanism for the outtake arm that is lighter and easier to maintain. The system consists of two flexible polycarbonate plates (3 mm thick, 27.5 cm and 23.5 cm long), CNC-cut. The lower ends are fixed to the sliders using a custom polycarbonate piece selected for durability and rapid prototyping. At the top, two 2 mm pattern spacers and a 5 mm spacer between the plates reduce friction. For added stability, we installed two 27-hole beams between the spacers to reinforce the structure.

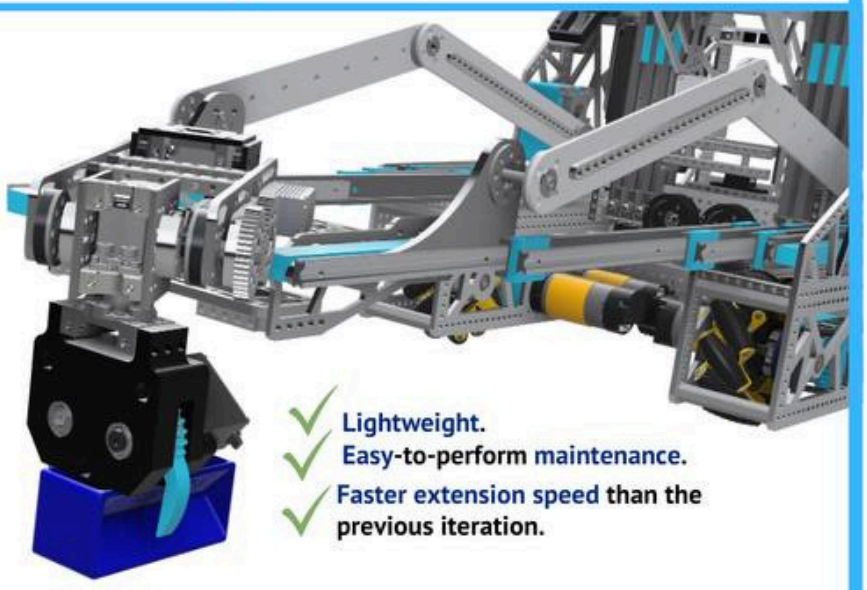

✓ Lightweight.

✓ Easy-to-perform maintenance.

✓ Faster extension speed than the previous iteration.

Physical calculations

According to the manufacturer's specifications, at 6 V and 4 A, the servo takes 0.115 seconds to rotate 60°. Since our servo needs to rotate 90°, we multiply the required time by a factor of 1.5, resulting in a new time of 0.1725 seconds for the motion. However, considering the effort exerted by the servo under load, we double the time needed to complete the movement. Therefore, the average linear speed of the extendo is:

$$v_m = \frac{0.51m\,(extension)}{0.34s} = 1.5\frac{m}{s}$$

The calculations were made at 100% of the servo motor's power, but since we use it at only 60% of its capacity, the time required to cover a 90° angle increases by approximately 0.15 s. Therefore, the average speed becomes:

$$v_m = \frac{0.51m}{0.49s} \approx 1\frac{m}{s}$$

Lift - 8

RAVENTECH - 19047

Iterative process

Version 1

The first iteration used two goBILDA Viper sliders, each 336 mm long with 3 segments, featuring a pivoting system. For driving the pivot mechanism, we chose two goBILDA Yellow Jacket motors running at 30 RPM, connected via bevel gears with a 1:1 ratio. These motors were linked to an 8 mm hexagonal shaft, 21 cm long, on which were mounted the aluminum plates.

- ✓ Heavy-duty sliders suitable for climbing mechanisms.
- ✗ Drastically shifted the robot's center of gravity during pivoting, reducing stability.
- ✗ Insufficient extension distance in front of the chassis.

Version 2

To increase the speed of the sliders, we replaced the three Viper segments with four Misumi slider segments driven by 435 RPM motors, chosen for their lighter weight. Unfortunately, the 435 RPM motors proved too slow for our strategy, so we needed a different solution.
We implemented a system that doubled the motor speed, achieving the desired velocity and improved efficiency.

- ✓ High motor RPM.
- ✗ Reduced torque.

Version 3

After changing the hanging system, we also modified the slider drive system. We used four 1150 RPM motors with a 2:1 gear ratio, resulting in an effective speed of 575 RPM. To connect the motors to the main shaft, we used four sets of bevel gears with a 2:1 ratio, and four sets of miter gears to transfer motion from the shaft to the motors.
For increased stability and durability, we replaced the 3D-printed parts between the sliders with aluminum components.

- ✓ Increased torque.
- ✓ Fast hanging.
- ✗ Power inefficiency: four motors were used.
- ✗ Still not enough speed.

Current version

We concluded that higher slider speed would be beneficial during both Autonomous and TeleOp periods. Therefore, we abandoned the hanging system, which required higher torque and limited speed. The sliders have the same number of segments, but now only 2 of the 4 motors are used, keeping the same gear ratio.

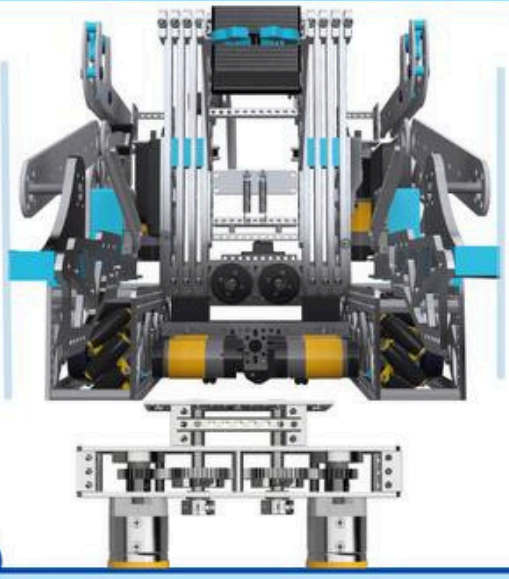

The motors are mounted in a housing made from custom flexible polycarbonate parts. We switched to a single-sided string system to reduce friction and improve efficiency. For easier cable management, we added two beams tensioned with a spring that fold without exceeding the maximum dimensions.

- ✓ High motor RPM.
- ✗ A need for a separate hanging system.

Physical calculations

To find the speed of the sliders driven by a 1150 RPM motor, we first calculate the number of rotations per second as follows: $RPS = \frac{1150rpm}{60s} = 19.1rps$

The diameter of the spool is: $d = 3,4cm = 0.034m$

Its circumference is: $\pi D = 3,14 \times 0.034m = 0.106m$

The linear speed is: $v = rps \times \pi D = 19.1rps \times 0.106m \approx 2\frac{m}{s}$

To find the speed of the sliders driven by 1150 RPM motors reduced to 575 RPM, we take the speed calculated for the 1150 RPM motors and divide it by two. This gives us a slider speed of: $1\frac{m}{s}$

RAVENTECH - 19047

9 - Outtake

Iterative process

Version 1

Our robot used a custom 3D-printed arm for collecting game elements from the transfer tray and placing them into the Basket or Chamber. For durability, this arm was reinforced with a double layer of 3 mm flexible polycarbonate. It was powered by two AXON Mini+ servomotors, allowing it to reach optimal positions for both picking up samples from the transfer system and acquiring specimens from the Observation Zone. Samples and specimens were precisely controlled by a claw, which featured an articulation point for optimal positioning when picking up elements from the transfer tray.

✓ Easy-to-perform maintenance.

✗ Low scoring speed.

✗ Minimal forward extension.

The lack of scoring speed made us adopt another design concept, therefore we implemented a linear extension system at the top of the sliders. This change significantly minimizes the time required to place specimens on the High Chamber.

Version 2

Our second outtake system included two Misumi sliders, driven by an AGFRC 45 kg servomotor via two beams, extending up to 30 cm in front of the robot. These sliders were mounted on custom 3D-printed parts.

Atop the sliders, an articulated arm held a fixed claw angled at 15°, enabling direct intake-outtake transfer. Post-testing and considering robot weight shifts, we added an articulation to the outtake claw for more efficient transfer positioning.

✓ Increased forward extension.

✗ Difficult-to-perform maintenance.

✗ Occupies significant space.

Current version

We significantly compacted the outtake system by reducing spacers and relocating the extension mechanism from above to underneath the sliders. We also eliminated one of the two extension segments, reducing the slider's forward extension from 30 cm to 18 cm. The revised extension mechanism now features two aluminum beams (9 cm and 12 cm, 5 mm thick).

The previous outtake arm, made from polycarbonate and a 3D-printed layer, was replaced with a single 3 mm thick aluminum plate for increased durability.

The gear system was updated to improve lifting torque. Instead of the old 1:1 ratio, the new setup uses a 40-tooth gear on the servo and a 48-tooth gear on the arm, resulting in a 5:6 ratio.

The claw was improved with a new component for consistent specimen alignment, ensuring accurate gripping. Its joint gear ratio was also changed from 1:1 to 5:6, further enhancing its performance.

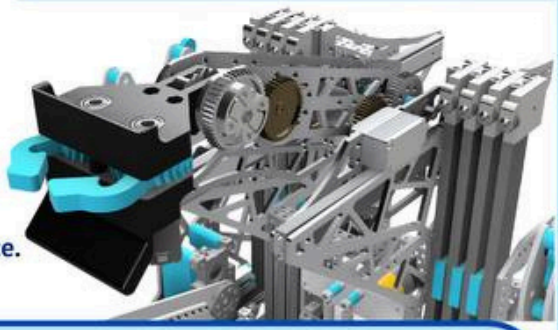

✓ Space-saving design.

✗ Difficult-to-perform maintenance.

✗ Decreased forward extension.

Physical calculations

We calculated the minimum torque required to move the arm and chose a 33 kgfcm servo for the arm joint.

$M_{minim} = F \times x = 3.5N \times 0.2m = 0.7Nm$ $\quad M_{servo} = 2.4Nm$

The calculations were based on 100% power, but we operate at only 60%. $\Rightarrow M_{servo} = 2.4Nm \times 60\% = 1.4Nm$

Since we have a gear ratio of 5:6, we obtain a total torque equal to: $1.4Nm \times \frac{6}{5} = 1.6Nm$

For all three iterations, we used the 45 kg AGFRC servo for extending the linear outtake. According to the manufacturers, at 6V and 4A, the servo takes 0.115 s to rotate 60°. Since our application requires a 120° rotation, we double the time, resulting in 0.23 s. Considering the load, we double the time again, accounting for the effort required by the servo. Average speed of the linear system at the top of the sliders: $v_m = \frac{0.18m\,(extension)}{0.46s} \approx 0.4\frac{m}{s}$

The calculation is made at 100% of the servo motor's power, but we are using only 60%, so the time for a 120° angle increases by 0.2 s, and the average speed becomes: $v_m = \frac{0.18m}{0.66s} = 0.27\frac{m}{s}$

Climb - 10

RAVENTECH - 19047

Iterative process

Version 1

For the first hanging system, we designed a simple mechanism using two hooks made from double-layered 3 mm flexible polycarbonate. The high torque of the 312 RPM goBILDA Yellow Jacket motors enabled a Level 2 Ascend. However, we had to abandon this approach due to the slow speed of the sliders. *Climbing time:* 3 s.

✓ High climbing speed.

✗ Insufficient speed for scoring in the High Basket.

Version 2

The main component of the hanging system consisted of two 312 RPM motors driving a goBILDA worm gearbox with a 28:1 ratio, connected to two hooks made from double-layered 3 mm flexible polycarbonate.
To ensure the system can withstand the climb, we calculated the robot's weight to be 181 N. Since the system uses four hooks, we divided the weight by 4, resulting in 45.25 N—the force tested in Fusion for each hook.

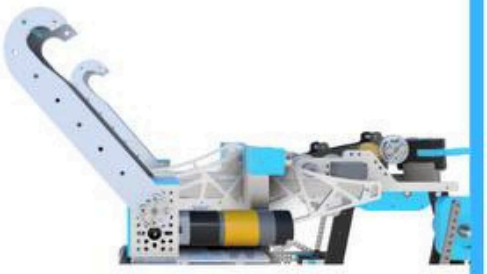

Climbing time: 7 s

✓ High torque.
✓ No need to power the motors to stay suspended.

✗ Slow climbing.

Version 3

To achieve an efficient and fast Level 2 Ascend, we implemented a hanging system on the second version of the lift system. The four motors driving them provided enough torque and speed to complete the climb quickly. Aluminum hooks ensured a secure grip, guiding the bar toward the robot's center of gravity, located 20 cm from the back of the chassis. *Climbing time:* 2.5 s.

✓ Rapid ascent.
✓ Hooking point positioned close to the center of gravity.

✗ Four motors were used.

Current version

The new hanging system uses two 30 RPM Yellow Jacket motors with 8 mm shafts and self-locking hooks. Mounted vertically at the back of the robot, the motors drive the hooks via 1:1 bevel gear sets. A mechanical stopper behind the gear assembly ensures stability, as the motors operate independently.
Each hook consists of two 3 mm flexible polycarbonate plates, reinforced with 1 cm 3D-printed spacers. At the tips, elastic 3D-printed parts—tensioned with NinjaFlex filament—allow the hooks to flex backward during climbing. This enables the hanging bar to slide in, after which the elastic elements snap back to lock the hooks in place.
Climbing time: 2.1 s.

✓ Rapid ascent.
✓ High torque.

✗ Occupies more space.

Physical calculations

The torque of a 30 RPM motor: $M_{stall} = 250kgcm = 24.5Nm$
Since the system is duplicated on both sides of the robot, the total torque is:

$$M_{total} = 24.5Nm \times 2 = 49Nm$$

The weight of the robot is approximately 163 N, calculated as follows: $G = m \times g = 16.7kg \times 9.8\frac{m}{s^2} = 163N$

The center of gravity of the robot is located 14.5 cm (0.145 m) from the axis of the motor used for climbing. Thus, the minimum torque required to lift the robot is: $M_{necessary} = G \times d = 163N \times 0.145m = 23.6Nm$

RAVENTECH - 19047

11 - Chassis

Chassis overview

This season, we opted for a parallel plate drivetrain chassis with belt transmission.

The design of the chassis side panels was chosen for both its strength and its ability to reduce weight. The cutouts in the panels are essential for easy maintenance, allowing screws to be tightened or loosened directly through the panel. To ensure the panels' efficiency, we ran simulations to identify weak and strong points. Before finalizing the design, we also tested how the cutouts affected the robot's overall weight.

Through these changes, we successfully reduced the weight by approximately 1.5 kg.

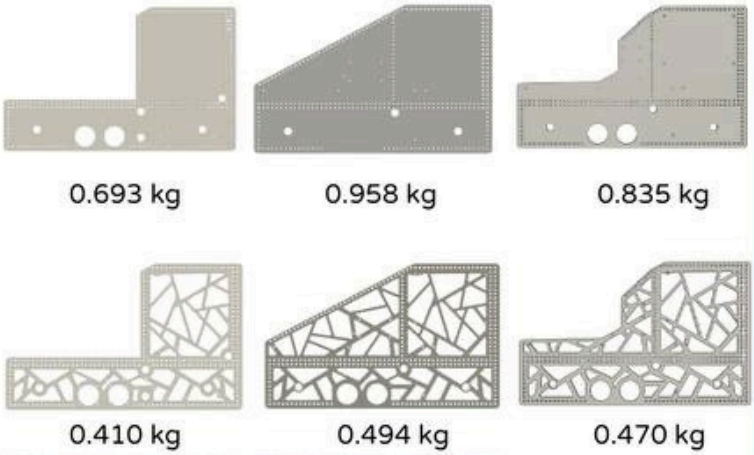

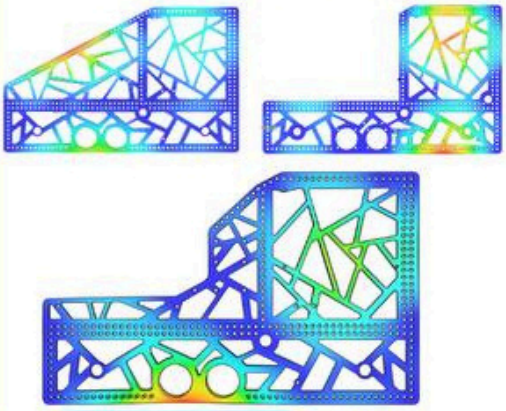

The advantages of a custom chassis

After the nationals, we decided to improve our chassis while keeping the advantages of the previous version:

- space efficiency;
- design flexibility;
- low weight;
- an optimal center of gravity due to the strategic placement of the motors and battery;
- a dedicated and secure space for mounting the electronics (REV Control Hub and Expansion Hub);
- a secure mounting point for the linear extension system;

Improvements

a) Reducing the dimensions

We decided to keep the chassis' length but reduced its width. The chassis now has the width of a 7-hole goBILDA channel.

b) Lateral panels

Another improvement made to the chassis was the modification of the side panels. Both panels now feature a new mounting system for the servo motors that drive the new extendo mechanism. Additionally, the right-side panel of the chassis now has a cutout that allows the intake arm to place game elements in the observation zone .

c) Speed increase

To further improve the chassis' speed, we modified the motors and the pulley ratio. We switched to 435 RPM motors and adjusted the ratio to 1:1.

d) Odometry pods replacement

After reducing the chassis dimensions, we had to replace the odometry pods as well. We switched from the Swingarm Odometry Pod to the 4-Bar Odometry Pod because they are smaller and easier to implement on a narrower chassis.

Physical calculations

The chassis is powered by four goBILDA motors running at 435 RPM, with a 1:1 gear ratio.
The torque of each goBILDA motor is 18.7 kgf·cm (1.83 Nm).
Since the gear ratio is 1:1, the torque at the wheels is the same as the motor torque.

$$\varphi = 30^\circ \qquad \mu = tan(30^\circ) = \frac{\sqrt{3}}{3} = 0.56$$

$$a_{max} = \mu \times g = 0.56 \times 9.8\frac{m}{s^2} = 5.4\frac{m}{s^2}$$

φ - The angle at which the wheel began to slip on the mat, obtained from measurements

The maximum power (P_{max}) of a motor is approximately 29 W, but the actual maximum power can also be calculated as the product of the maximum speed (v_{max}) and the maximum static friction force (Ff_{max}), considering that we have 4 motors:

$$\Rightarrow 4 \times P_{max} = F_{fmax} \times v_{max} \Rightarrow v_{max} = \frac{4 \times P_{max}}{F_f} = \frac{4 \times P_{max}}{\mu \times m \times g} = \frac{4 \times 29W}{0.56 \times 16.7kg \times 9.8\frac{m}{s^2}} \simeq 1.26\frac{m}{s}$$

Software - 12

RAVENTECH - 19047

TeleOp

To ensure rapid and consistent cycles, we've integrated key improvements. We leverage multi-threading to allow for simultaneous robot movements by running two program threads in parallel. Our automated processes further enhance cycle precision. Crucially, a touch sensor is used for slide retraction, giving us precise feedback and preventing motor strain that could otherwise occur from the PID.

```
if (gamepad2.left_stick_y != 0.0) {
    s.slider1.setPower(gamepad2.left_stick_y);
    s.slider2.setPower(gamepad2.left_stick_y);
    s.slider3.setPower(gamepad2.left_stick_y);
    s.slider4.setPower(gamepad2.left_stick_y);
    pid = true;
} else {
    if (pid) {
        pid = false;
        pidSlider.setSetpoint(s.slider1.getCurrentPosition());
    }
    if (s.touch_slider.isPressed()) {
        pidSlider.setSetpoint(0);
        s.slider1.setPower(0);
        s.slider2.setPower(0);
        s.slider3.setPower(0);
        s.slider4.setPower(0);
    } else {
        pidResultS = pidSlider.performPID(s.slider1.getCurrentPosition());
        s.slider1.setPower(pidResultS);
        s.slider2.setPower(pidResultS);
        s.slider3.setPower(pidResultS);
        s.slider4.setPower(pidResultS);
    }
```

```
if (gamepad2.a){
    s.ghearaOut.setPosition(p.ghearа_out_inchis);
    s.ghearaIn.setPosition(p.ghearа_in_deschis);
    timer2.reset();
    timp2 = true;
}
if (timer2.milliseconds()>=150 && timp2){
    s.brat_dr.setPosition(p.brat_dr_extindere);
    s.brat_st.setPosition(p.brat_st_extindere);
    s.incheietura.setPosition(p.incheiatura_luare);
    timp2 = false;
```

PID

We employ a PID Controller on the two motors driving the slide system to hold their position while the robot places specimens and samples. This controller works by precisely adjusting motor power, ensuring the slides remain at their target position and minimizing error from the reference.

We tuned these values manually using the FTC Dashboard, which allowed us to graphically monitor the error and fine-tune the coefficients in real-time during TeleOp.

$$u(t) = K_p e(t) + K_i \int_0^t e(\tau)d\tau + K_d \frac{d}{dt}e(t)$$

The PID algorithm relies on three main coefficients:

- P (Proportional) – This is directly proportional to the system's error and needs to be calibrated to minimize oscillations.
- I (Integral) – This is proportional to the sum of errors accumulated over time, allowing the system to overcome obstacles like static friction.
- D (Derivative) – This is proportional to the rate of change of the error and helps prevent sudden system reactions to rapid modifications.

By combining these three components, the PID Controller ensures precise and stable control of the slides.

Autonomous

The Pedro Pathing localizer is a tool we use to precisely determine our robot's position and orientation on the field. This system excels at translating the robot's sensor-measured movements from its own perspective into a fixed global coordinate system. A key benefit of its three-wheel localizer is its typical use of three unpowered "odometry" wheels, each with an encoder. These wheels are strategically placed to accurately measure movement in various directions: forward, lateral (side-to-side), and rotational. This setup gives us highly accurate and reliable localization, which is crucial for successful robot navigation and task execution.

We chose to use the Pedro Pathing Visualizer as our go-to tool for designing and fine-tuning our autonomous robot movements.

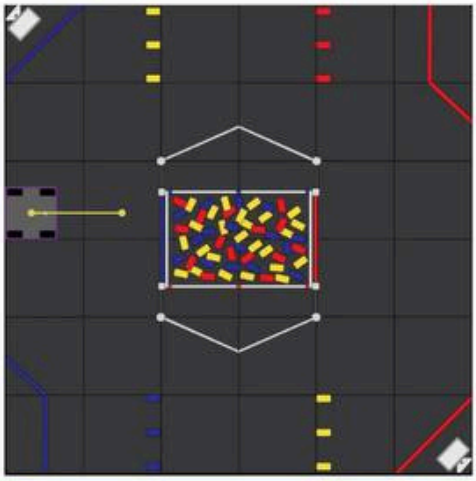

RAVENTECH - 19047

13 - Software

Bezier Curves in Pedro Pathing

For defining the smooth, executable movements the robot needs to follow, Pedro Pathing utilizes Bezier curves. These curves are mathematical constructs that provide a flexible and efficient way to define continuous paths between specified waypoints.

Instead of just connecting points with straight lines, Bezier curves generate smooth, aesthetically pleasing, and kinematically feasible trajectories. The robot's control system uses data from its three-wheel localizer to determine its current position, then calculates the necessary motor commands to follow the path defined by the Bezier curve.

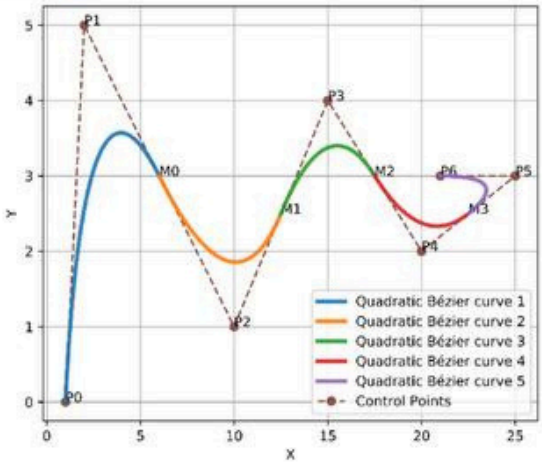

Detection overview

We use a Limelight 3A camera, mounted on the extendo, for detecting game elements. To detect them, we experimented with various pipeline configurations, but decided to stick with Python SnapScript pipelines. These give us the ability to write our own code for processing the image captured by the Limelight

Development Process / Problem Solving

- We chose Python SnapScript as our pipeline type because it offers customizable configuration.
- We developed three pipelines that detect objects based on color.
- We improved the algorithm to separate the contour of the elements.
- We implemented an algorithm for positioning the system based on Tx, Ty, and Ta using trigonometry.

Encountered Problems

- With the first pipeline iteration, the camera couldn't separate elements, leading to positioning errors when we tried to collect from the submersible during the autonomous period.
- Positioning errors of the differential system occurred after detection was performed.

Contour Separation Algorithm

This algorithm involves detecting contours from the final mask. Contours represent the boundaries of objects, and the algorithm identifies and filters out those that are too small to be relevant. The remaining contours are processed to simplify them. Where necessary, complex contours are approximated to become simpler polygons, typically triangles or quadrilaterals. These simpler shapes are important because they help identify the geometric characteristics of objects, such as corners or sides.

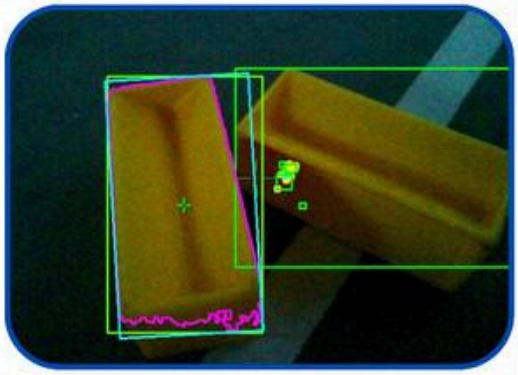

Multithreading

To control the system during trajectories, we use multi-threading. This helps us optimize cycles, saving a significant amount of time.
Essentially, whenever we want a system action to occur simultaneously with a trajectory, we start a separate thread from the chassis. We also tried the alternative offered by the RoadRunner library—namely, displacement markers and temporal markers—but we weren't satisfied with the results, so we stuck with threads.

```
new Thread(()->{
    retragere();
    s.kdf( t: 900);
    transfer();
    slidere();
}).start();
```

Outreach - 14

RAVENTECH - 19047

Introduction

Our greatest passion is the STEM field, and we aim to promote it locally, nationally, and internationally. Through the events we organize and our social media campaigns, we strive to inspire our community, encourage innovation, and support the development of the technological future.

Impact in the *FIRST* community

Hunedoara Dual Meet

Hunedoara Dual Meet by RavenTech & RobotX includes two League Meets co-hosted with our sister team, allowing teams to test new systems and strategies. With the support of our partner, Hunedoara City Hall, the matches were live-streamed in the heart of our city.

Medieval Robotics Day at Corvin Castle

We organized the 7th edition of Medieval Robotics Day at Corvin Castle in Hunedoara—an iconic location that offered a spectacular historical setting for 8 robotics teams and hundreds of science enthusiasts .

Mentoring 4 *FIRST* teams

We mentor the *FIRST* LEGO League teams Robomoon, Alphabot, and Corvina Lego. This is also our second season mentoring the *FIRST* Tech Challenge team Afton Robotics from Hațeg, Romania.

FTC & FLL Competition Manuals translation

We translated this season's FTC and FLL manuals into Romanian to improve information accessibility for teams in Romania and the Republic of Moldova, supporting their participation in these competitions.

Impact in the scientific community

RavenTech on the ISS

Our project, which determines the ISS's real-time position and speed ran on the International Space Station as part of the AstroPi competition. This project was later implemented on a drone, an innovation that won a gold medal at the National Scientific Creativity Olympiad.

European Researcher's Night

We co-organized the European Researchers' Night together with the Faculty of Engineering in Hunedoara. At the event, we presented our robots, showcased 3D modeling techniques, and gave out personalized keychains.

Galactic Gathering

Our team, together with members of the Romanian Space Initiative, organized a conference where we presented our project that ran on the ISS this season.

RAVENTECH - 19047

15 - Outreach

Community Impact

The referee robot - Romanian Cup quarterfinal

The robot built by our team members signaled the start of the Romanian Cup quarterfinal match in front of over 12,000 spectators.

High Level Conference at Corvin Castle

We met representatives from the UN, WHO, Romanian government ministers, and officials from several EU member states at the "High Level Conference on Children, Youth and Family Policies".

3D Modelling courses for local students

We organized several 3D modeling course sessions for 60 middle school students in our town. They learned how to design basic models and gained hands-on experience using Onshape.

Other organized events

- Open Doors event on June 1st in our hub
- Treasure Hunt for students in our school
- Meeting with the FTC Justice Team
- Visit of a delegation from China to the Faculty of Enginnering Hunedoara
- Visit of former students from our high school, a delegation from China, our school's teachers, and the Robomoon team to our headquarters
- Visits to rural areas, to the Theoretical High Schools in Crișcior and Teliuc
- Restoration of the Govăjdia Blast Furnace

Events we took part in

- "Anton Saimac" Science Contest
- INVENTCOR Invention Fair 2024 & 2025
- Educational Opportunities Fair 2024 & 2025
- Robotics Camp in Beclean
- Night of the Libraries
- Job Fair 2024
- Tech Day
- Christmas Fair
- Donate Blood, Be a Hero! Campaign
- 3 League Meets
- Partnership with FTC Teams from the Jiu Valley, RO
- Electric Car Meet

Our journey to Michiana Premier Event

Our participation in the Michiana Premier Events was one of the most incredible opportunities our team has received. The invitation marked the beginning of a journey to secure the resources needed to make the trip possible. We are deeply grateful for the support from our community, which motivates us to continue giving back. Thank you to our sponsors and partners, to the media for helping promote our cause, and to every community member who supported us along the way!

Business Plan

Strategy

Each season, we strive to grow our visibility and impact within the community. This year, our performance in the FIRST Tech Challenge and the invitation to the Michiana Premier Event significantly boosted our credibility and strengthened community support.

As a result, we welcomed 22 new sponsors, and our budget increased by $34,000 compared to last season.

We maintain strong relationships with our partners and sponsors through regular meetings and visits—for example, at KLASS CNC, a partner who provides us with custom aluminum components.

Key partners include Hunedoara City Hall, the Faculty of Engineering in Hunedoara, and KLASS CNC.

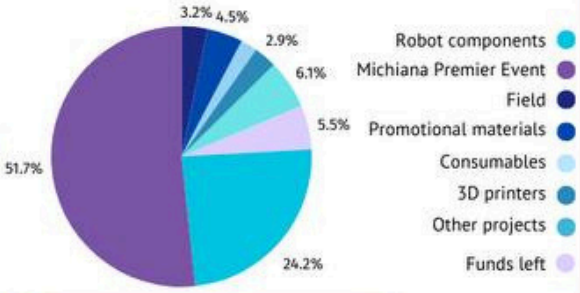

Total budget: 57.300 $

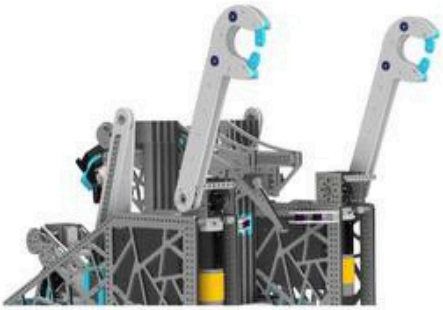

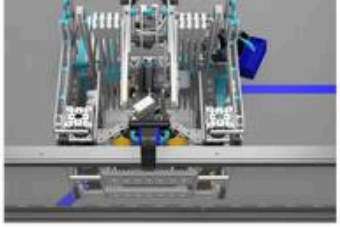

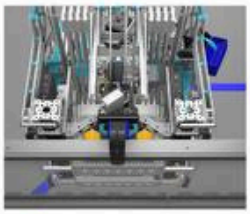

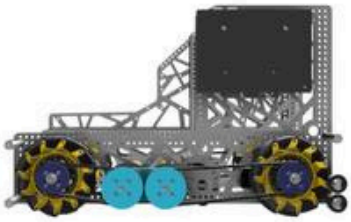

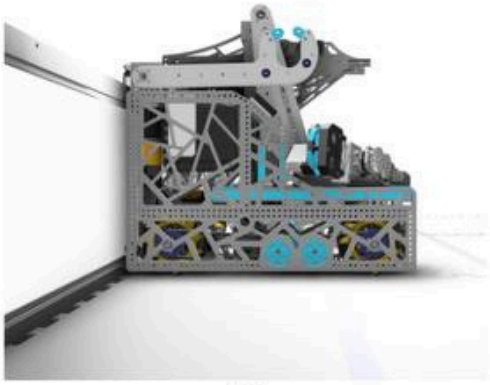

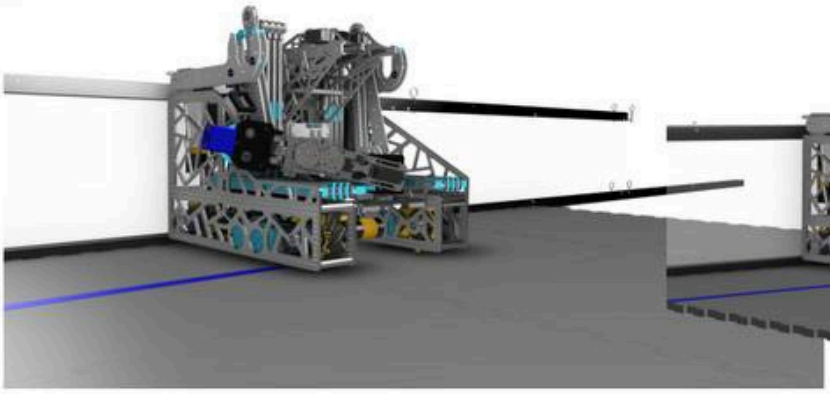

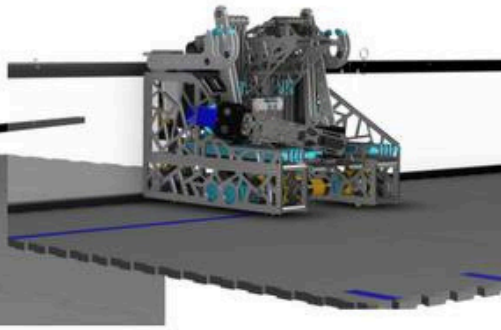

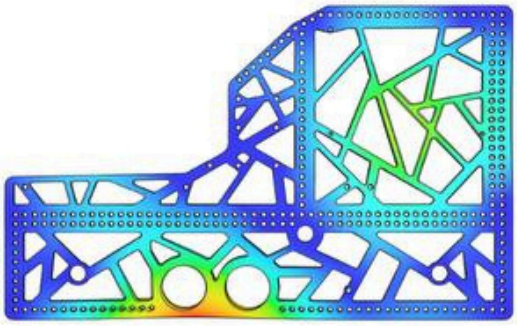

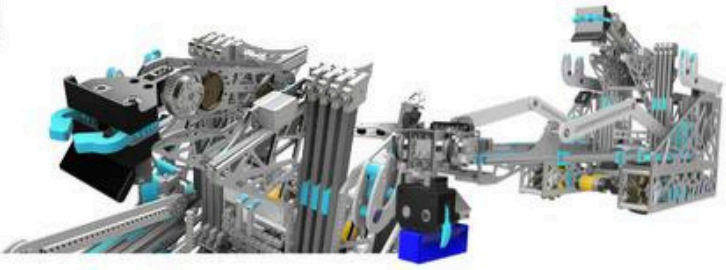

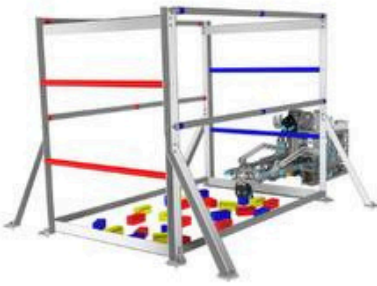

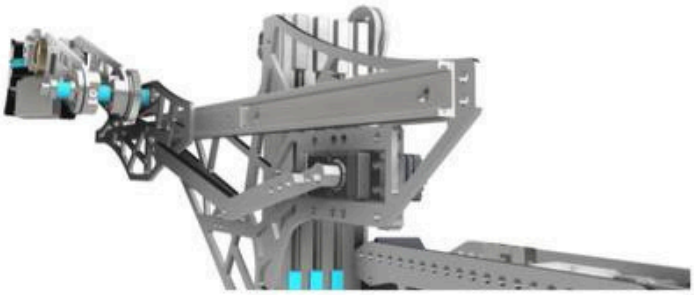

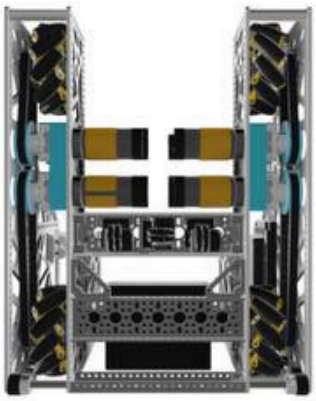

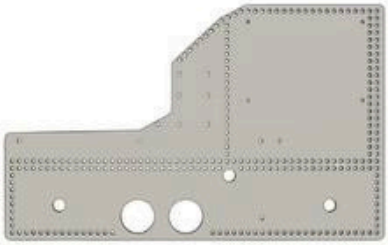

0.835 kg

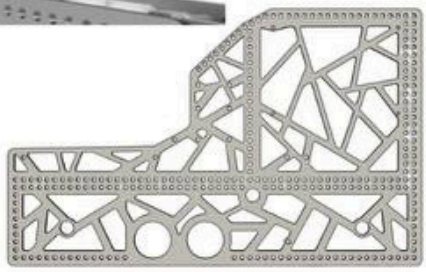

0.470 kg

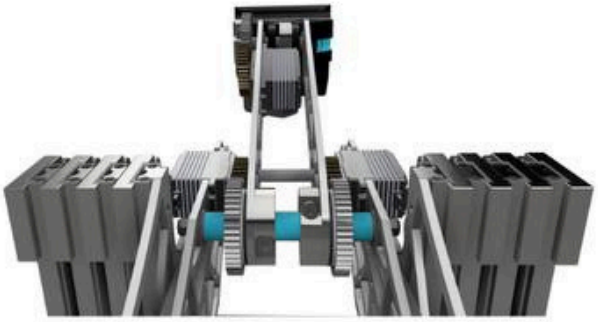

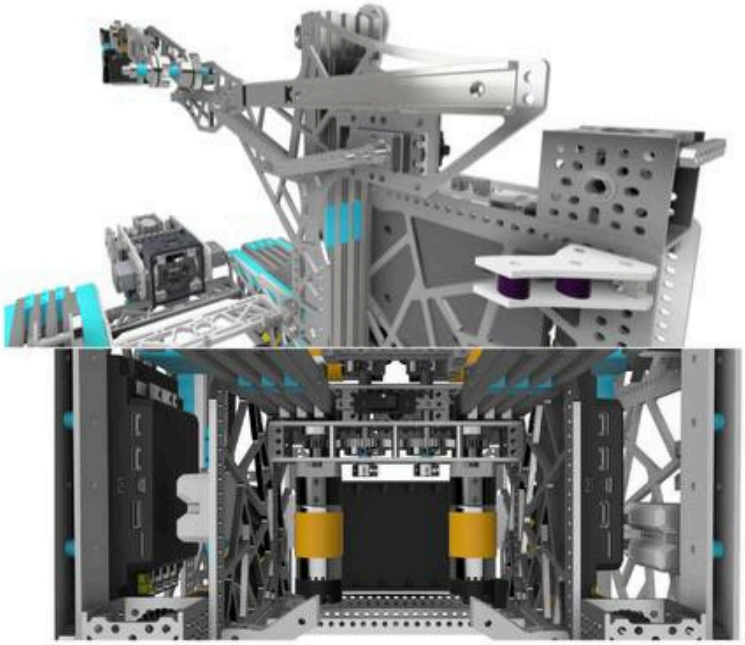

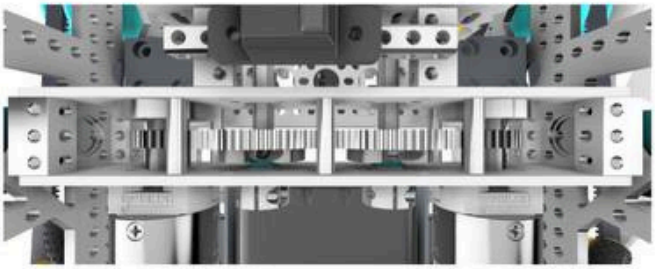

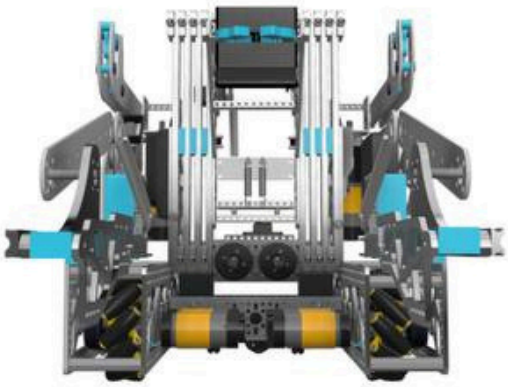

RAVENTECH