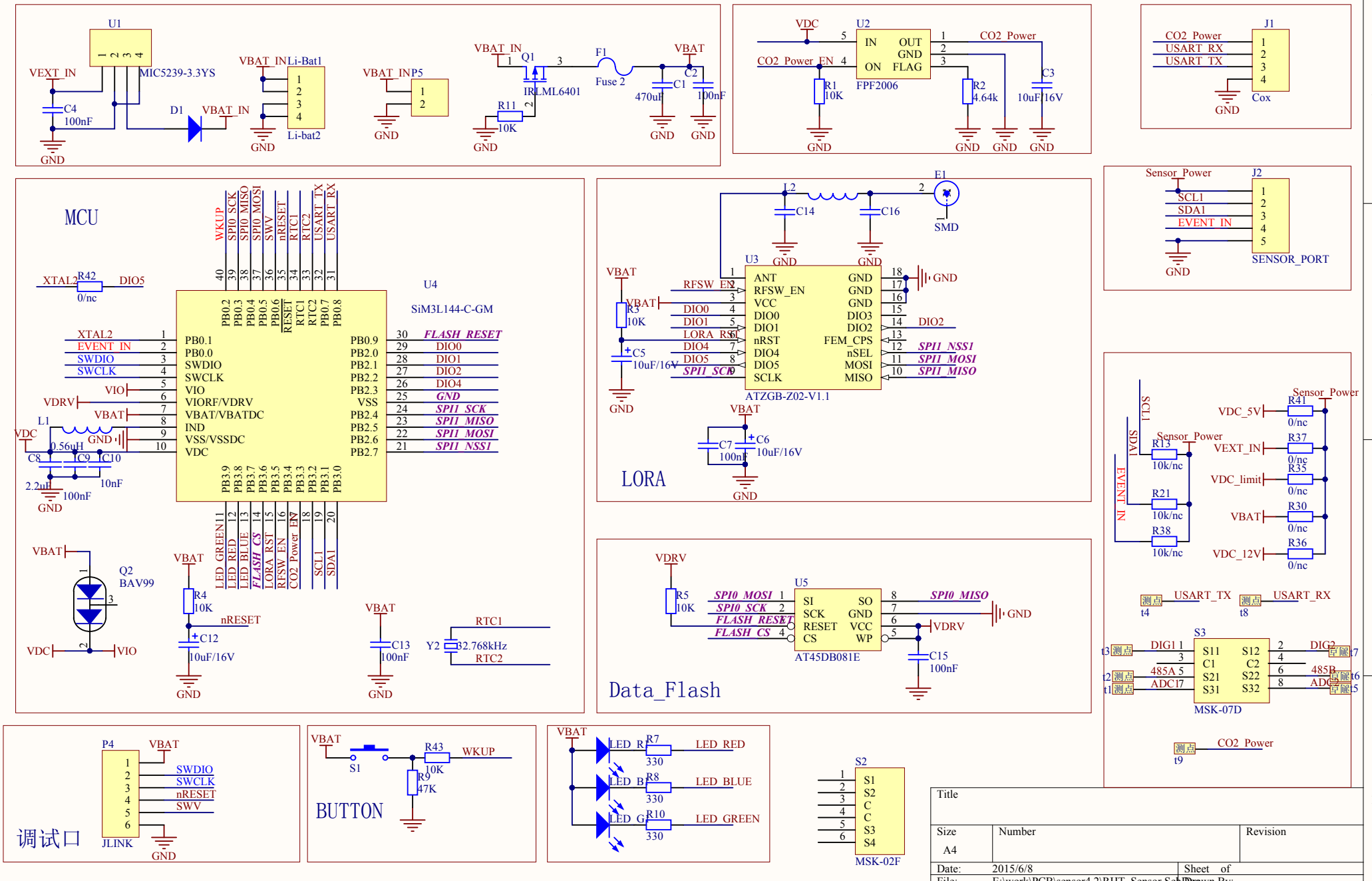
U1
MIC5239-3.3YS
VEXT_IN
C4
100nF
D1
VBAT_IN
Li-Bat1
Li-bat2
P5
GND
Q1
IRLML6401
R11
10K
F1
Fuse 2
VBAT
C1
470uF
C2
100nF
U2
FPF2006
IN
OUT
GND
ON
FLAG
VDC
CO2_Power_EN
R1
10K
R2
4.64k
C3
10uF/16V
CO2_Power
J1
USART_RX
USART_TX
Cox
MCU
U4
SiM3L144-C-GM
XTAL2
R42
0/nc
DIO5
EVENT_IN
SWDIO
SWCLK
VIO
VDRV
L1
0.56uH
C8
2.2uF
C9
100nF
C10
10nF
WKUP
SPI0_SCK
SPI0_MISO
SPI0_MOSI
SWV
nRESET
RTC1
RTC2
USART_TX
USART_RX
FLASH_RESET
DIO0
DIO1
DIO2
DIO4
SPI1_SCK
SPI1_MISO
SPI1_MOSI
SPI1_NSS1
LED_GREEN
LED_RED
LED_BLUE
FLASH_CS
LORA_RST
RFSW_EN
CO2_Power_EN
SCL1
SDA1
Q2
BAV99
R4
10K
C12
10uF/16V
C13
100nF
Y2
32.768kHz
LORA
U3
ATZGB-Z02-V1.1
ANT
RFSW_EN
VCC
DIO0
DIO1
nRST
DIO4
DIO5
SCLK
GND
DIO3
DIO2
FEM_CPS
nSEL
MOSI
MISO
L2
C14
C16
E1
SMD
R3
10K
C5
10uF/16V
C6
10uF/16V
C7
100nF
Data_Flash
U5
AT45DB081E
SI
SCK
RESET
CS
SO
WP
R5
10K
C15
100nF
Sensor_Power
J2
SENSOR_PORT
R41
R37
R35
R30
R36
R13
10k/nc
R21
R38
VDC_5V
VEXT_IN
VDC_limit
VBAT
VDC_12V
0/nc
USART_TX
USART_RX
S3
MSK-07D
DIG1
DIG2
485A
ADC1
485B
ADC2
CO2_Power
P4
JLINK
SWDIO
SWCLK
nRESET
SWV
调试口
BUTTON
S1
R43
10K
R9
47K
LED_R
LED_B
LED_G
R7
R8
R10
330
LED_RED
LED_BLUE
LED_GREEN
S2
MSK-02F
Title
Size
A4
Number
Revision
Date: 2015/6/8
Sheet of
File: E:\work\PCB\sensor4.2\RHT_Sensor.SchDoc
Drawn By: