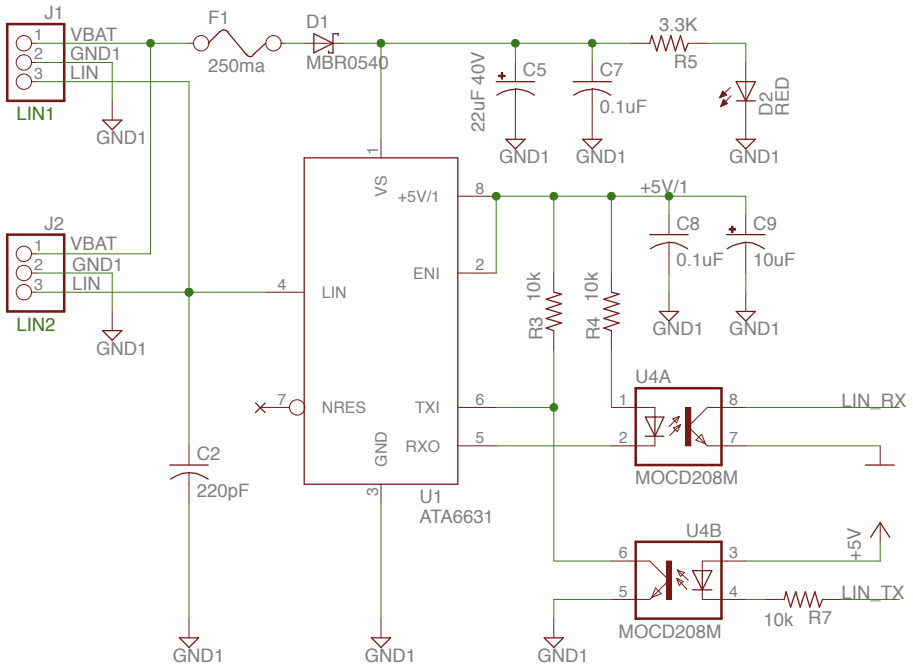

Isolated LINBUS Interface

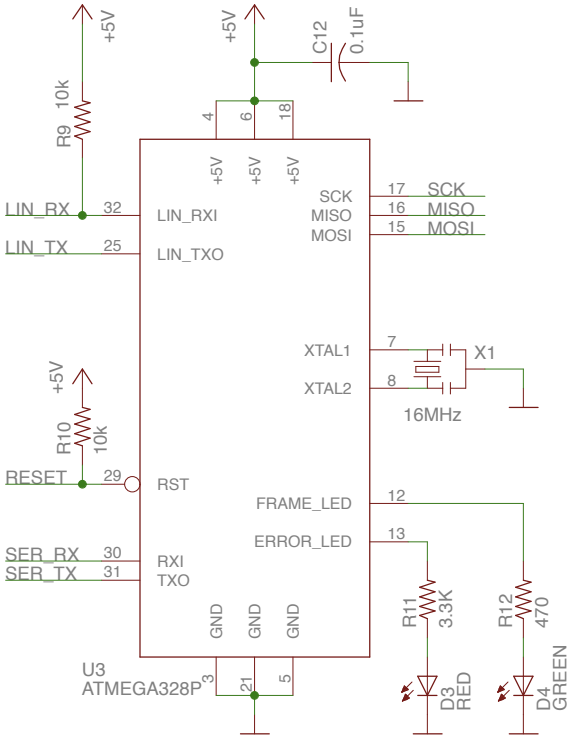

MCU

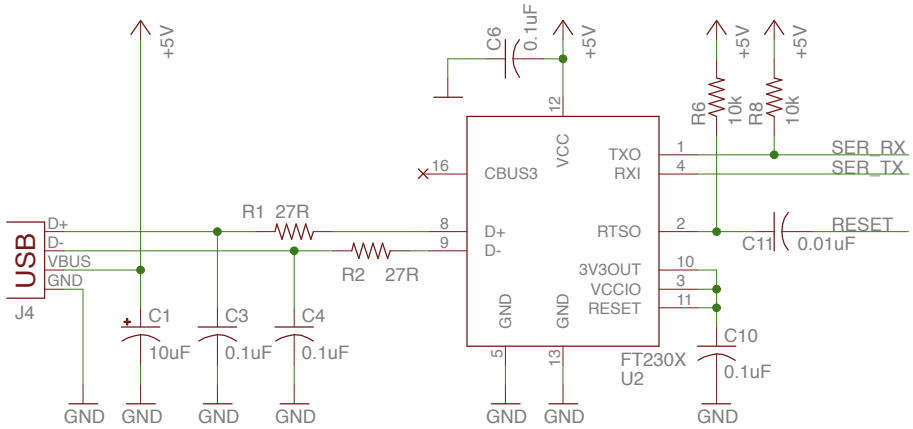

USB/Serial

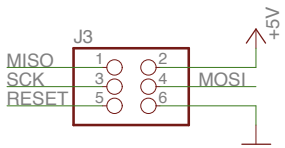

ICSP

DESIGN NOT VERIFIED YET

TITLE: analyzer	
Document Number:	REV:
Date: 2/4/14 9:54 PM	Sheet: 1/1