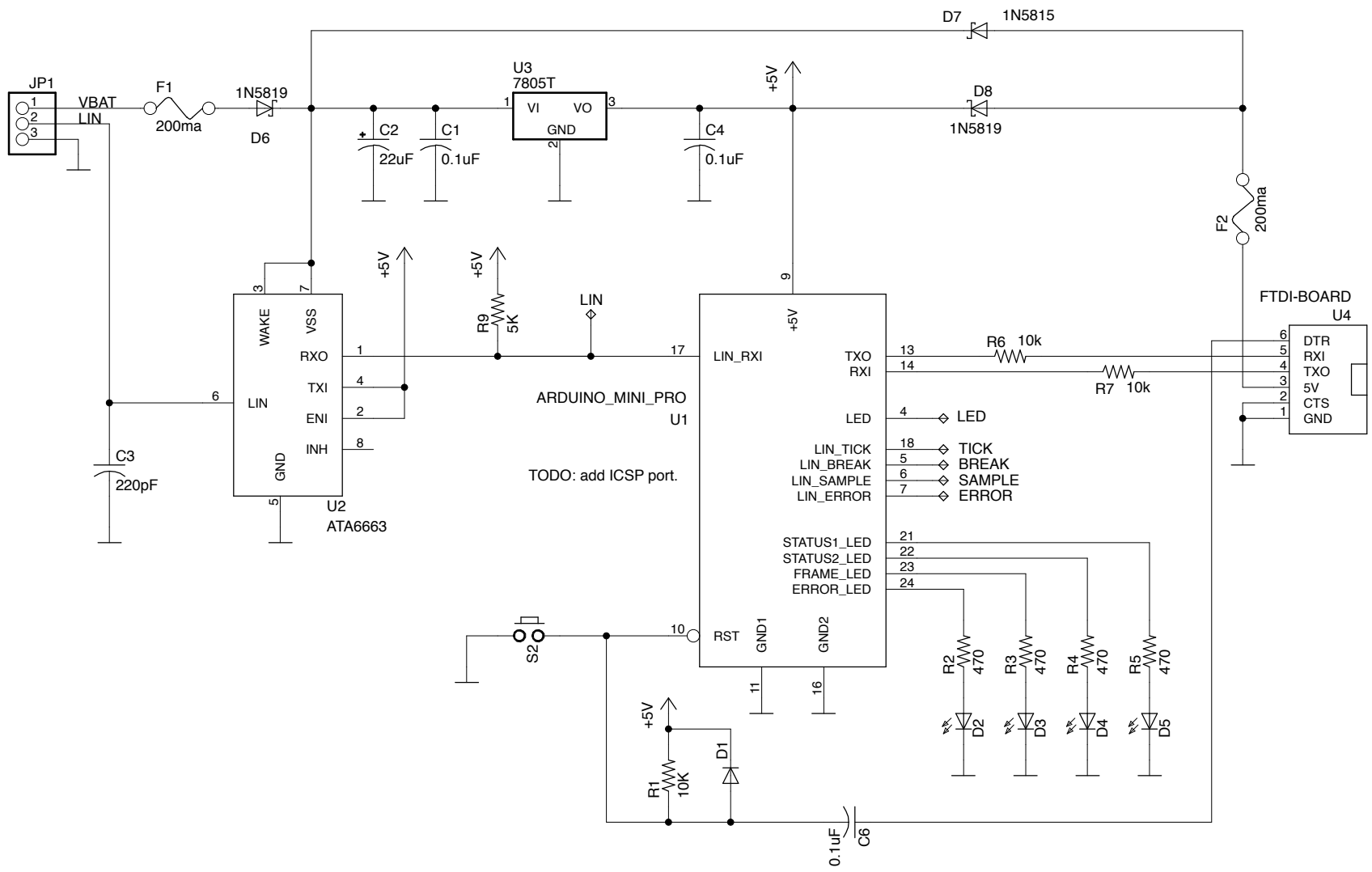

TITLE: proto

Document Number:

REV:

Date: 1/4/14 7:58 PM

Sheet: 1/1