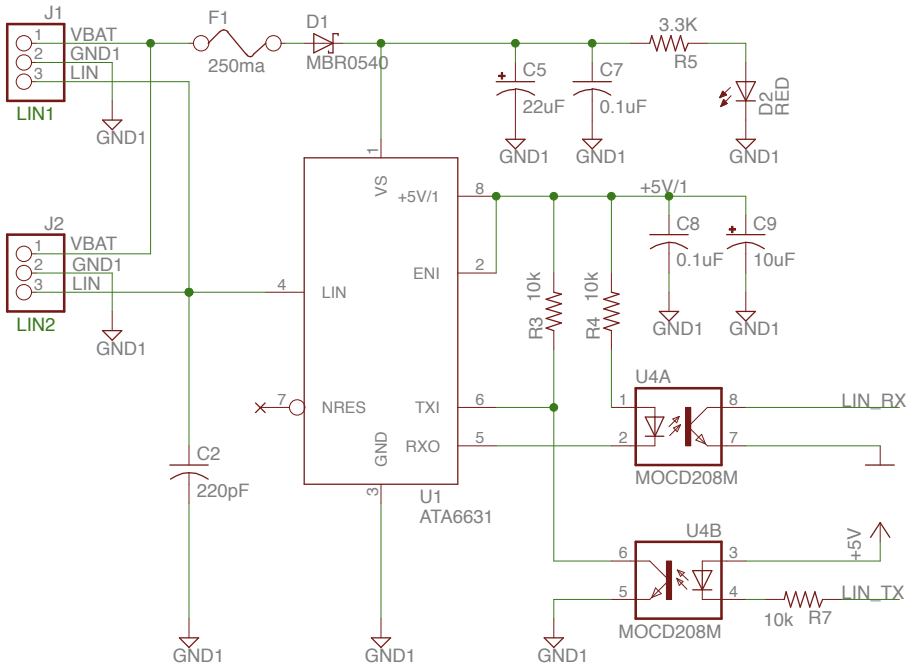

LINBUS Interface

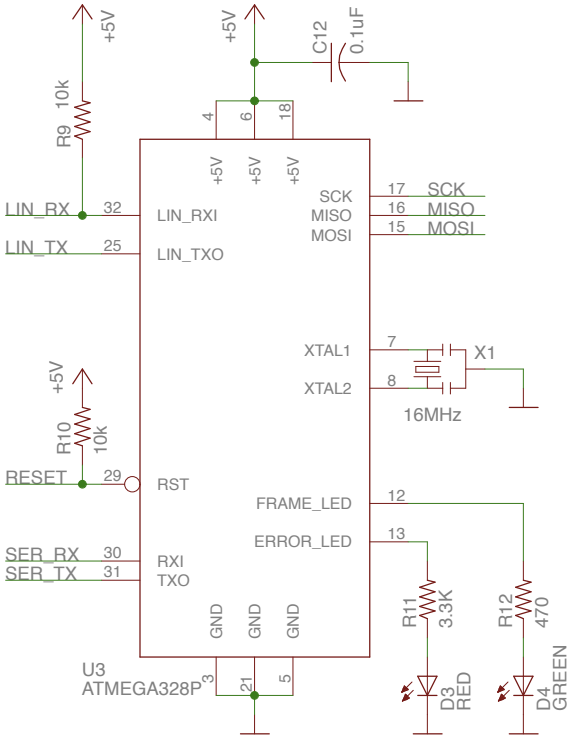

MCU

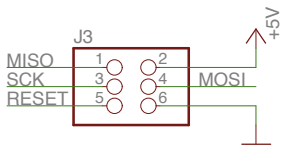

ICSP

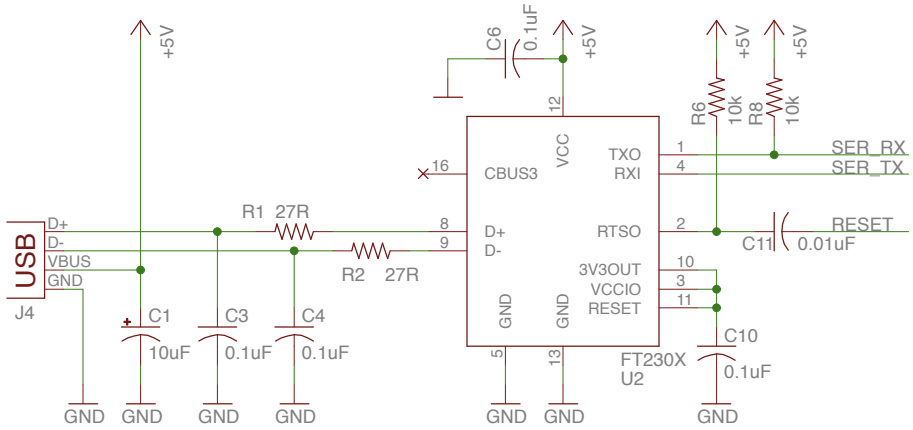

USB/Serial

DESIGN NOT VERIFIED YET

TITLE: analyzer

Document Number:

REV:

Date: 2/4/14 12:43 PM

Sheet: 1/1