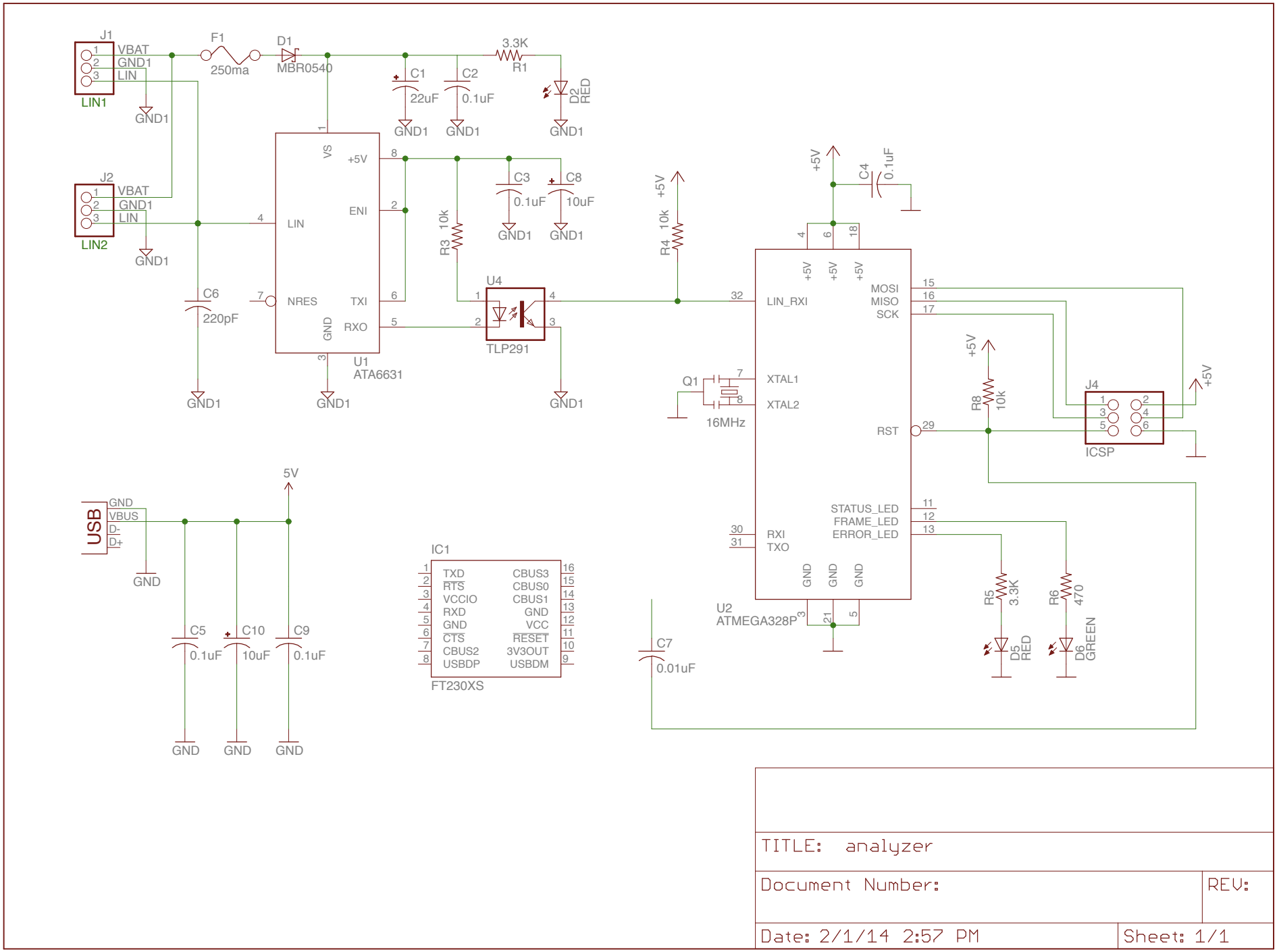

TITLE: analyzer

Document Number:

REV:

Date: 2/1/14 2:57 PM

Sheet: 1/1