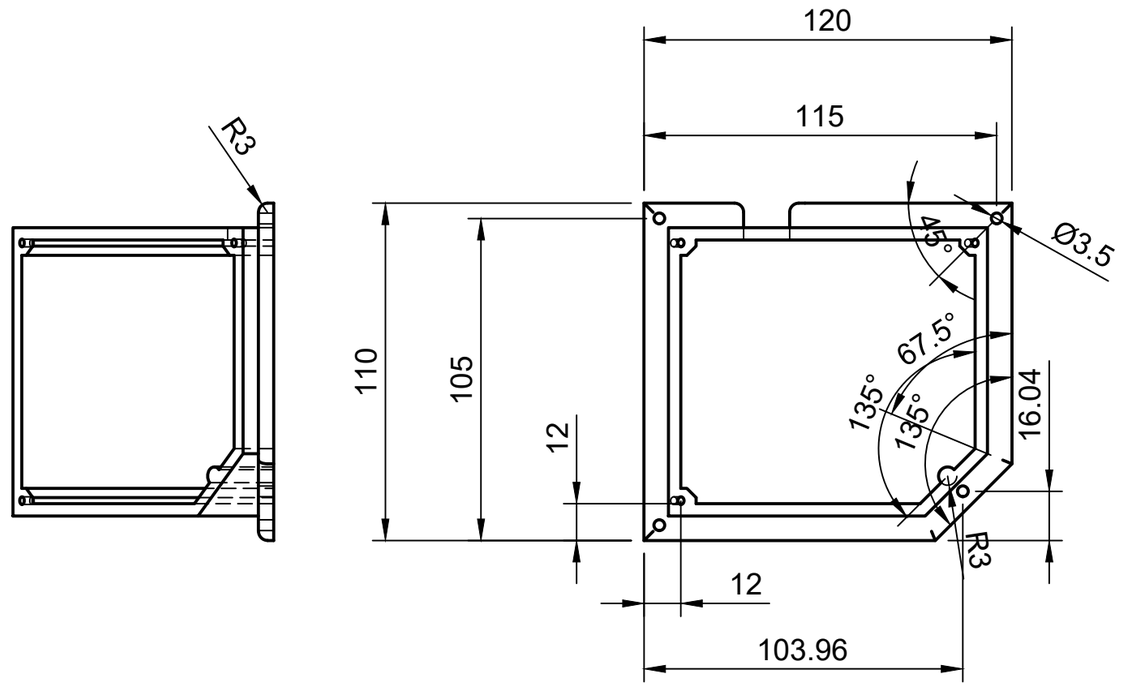

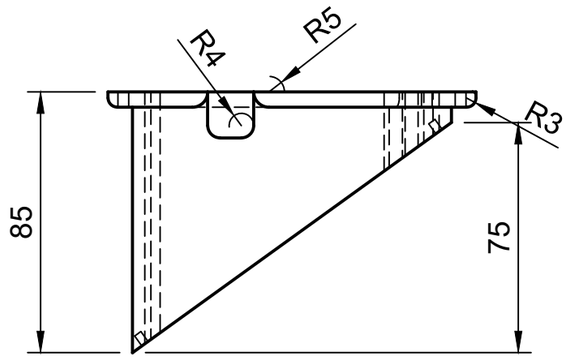

Dept.	Technical reference	Created by Saul Bringas 04/09/2025	Approved by
		Document type	Document status
		Title ScreenEnclosure	DWG No.
			Rev. / Date of issue / Sheet 1/1