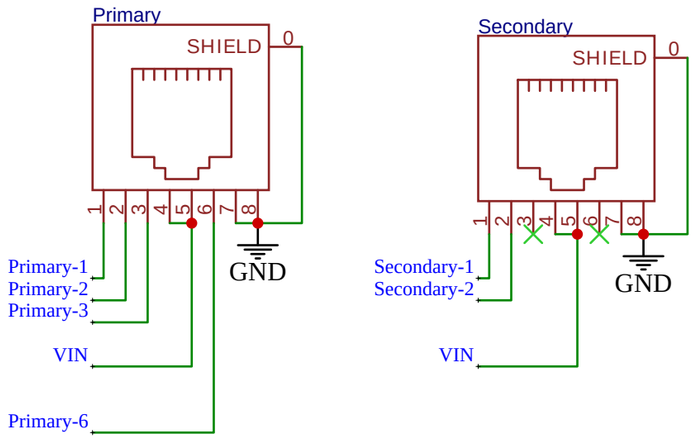

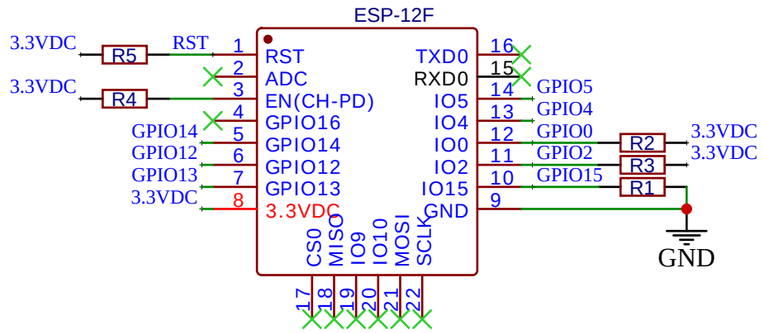

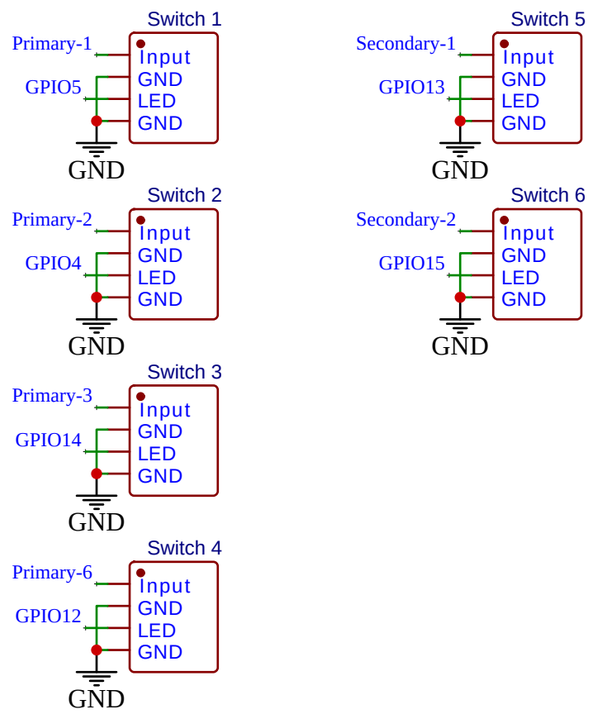

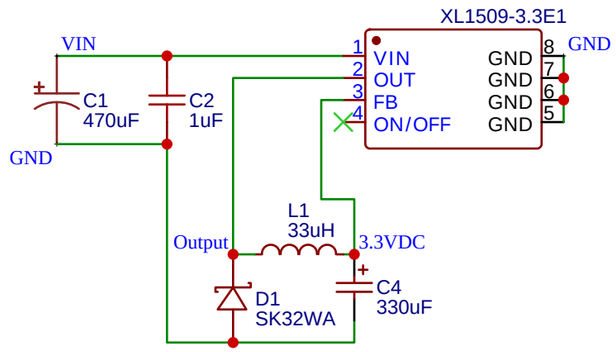

TITLE: Project FireFly NodeMCU v3 Lightswitch	REV: 3.0
Company: P5 Software, LLC	Sheet: 1/1
Date: 2020-09-26 Drawn By: BAH	