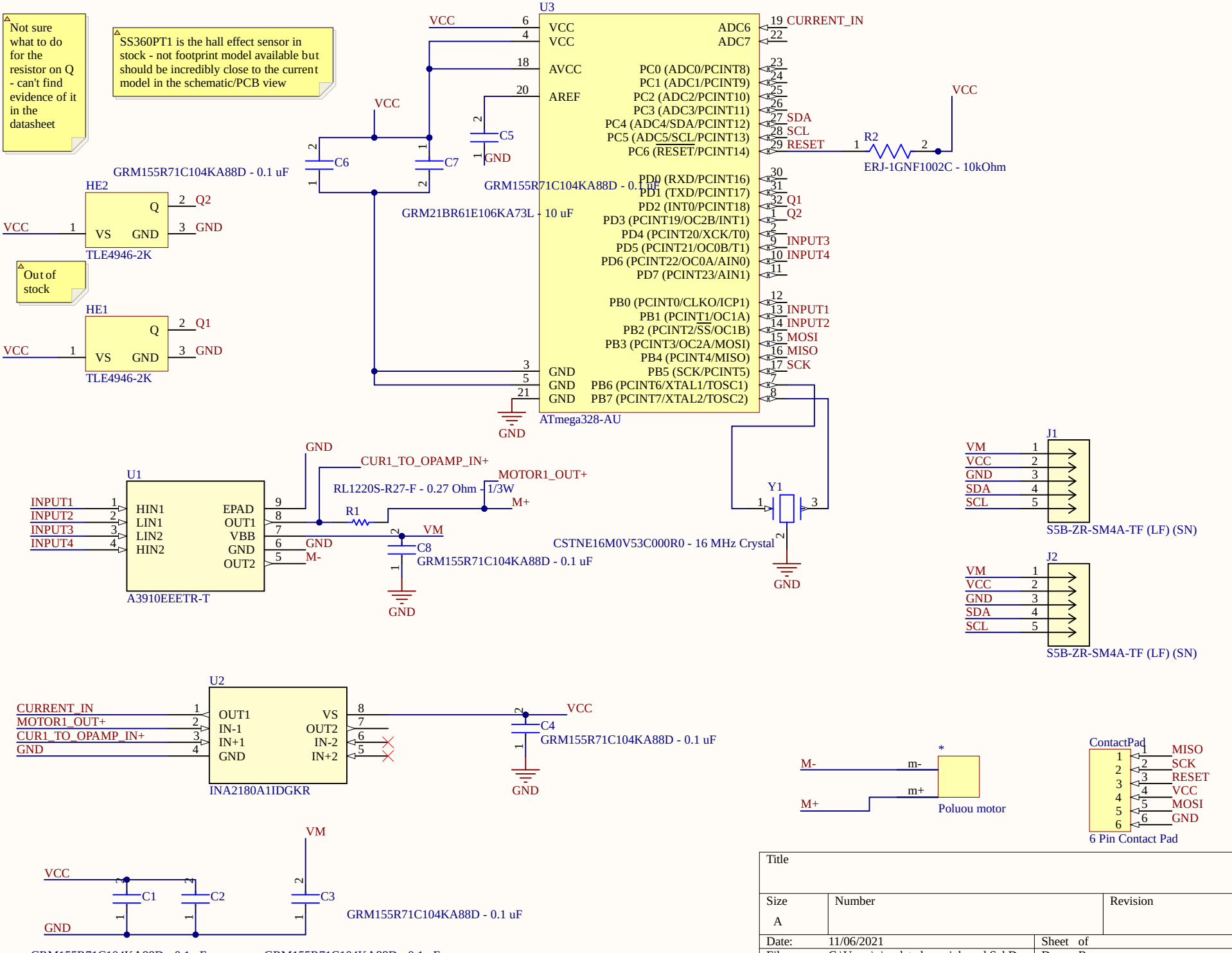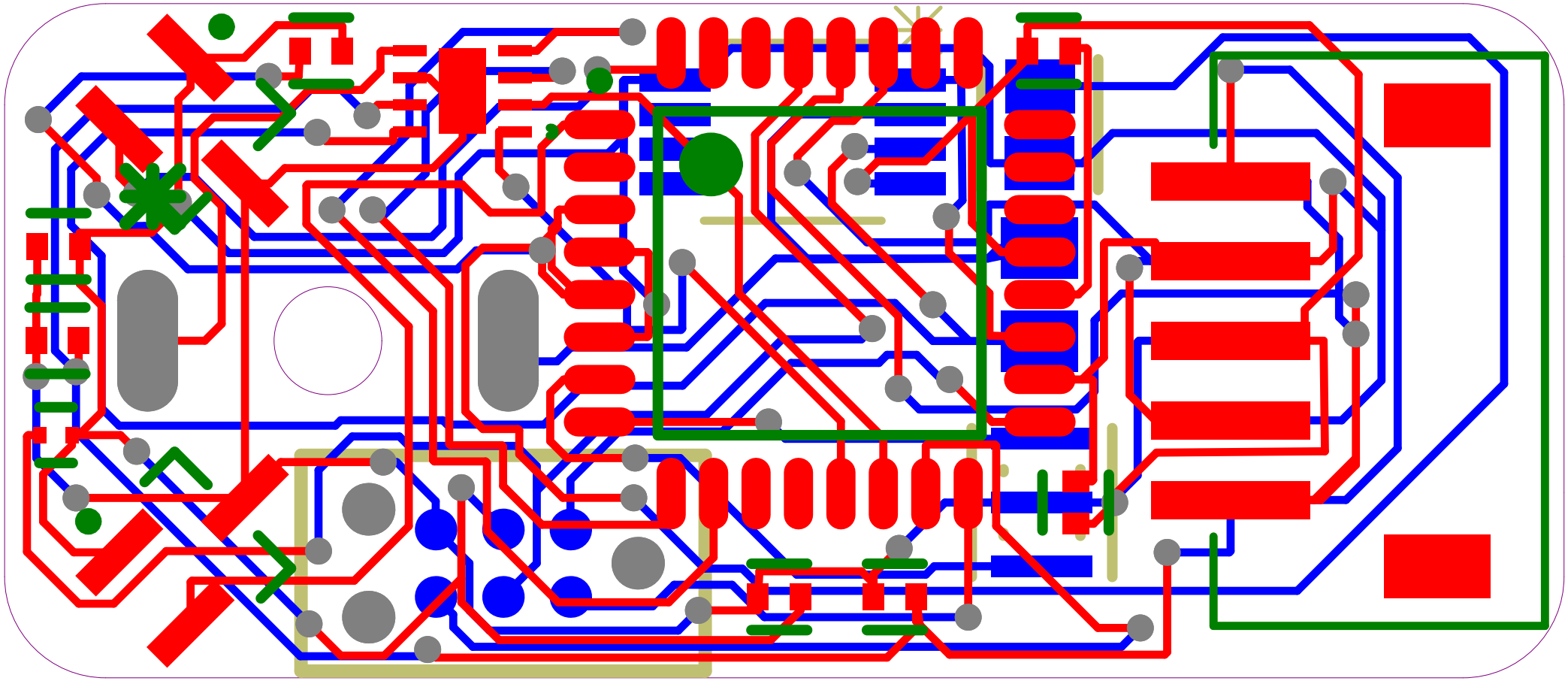
Not sure what to do for the resistor on Q - can't find evidence of it in the datasheet
SS360PT1 is the hall effect sensor in stock - not footprint model available but should be incredibly close to the current model in the schematic/PCB view
Out of stock
U3
ATmega328-AU
VCC
GND
CURRENT_IN
SDA
SCL
RESET
Q1
Q2
INPUT3
INPUT4
INPUT1
INPUT2
MOSI
MISO
SCK
R2
ERJ-1GNF1002C - 10kOhm
C5
C6
C7
GRM155R71C104KA88D - 0.1 uF
GRM21BR61E106KA73L - 10 uF
HE2
HE1
TLE4946-2K
Q
VS
U1
A3910EEETR-T
HIN1
LIN1
LIN2
HIN2
EPAD
OUT1
VBB
OUT2
CUR1_TO_OPAMP_IN+
MOTOR1_OUT+
RL1220S-R27-F - 0.27 Ohm - 1/3W
R1
M+
M-
VM
C8
Y1
CSTNE16M0V53C000R0 - 16 MHz Crystal
J1
J2
S5B-ZR-SM4A-TF (LF) (SN)
U2
INA2180A1IDGKR
IN-1
IN+1
IN+2
C4
C1
C2
C3
Poluou motor
ContactPad
6 Pin Contact Pad
Title
Size
A
Number
Revision
Date: 11/06/2021
Sheet of
File: C:\Users\..\updated_sami_board.SchDoc
Drawn By: