PROTOTYPING AREA

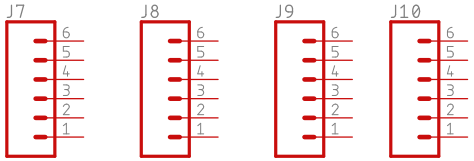

POWER RAILS

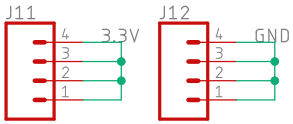

BUTTONS

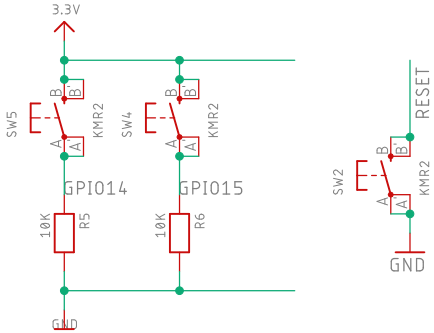

IO

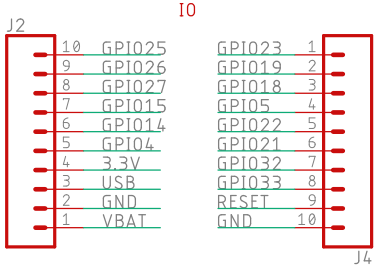

IO

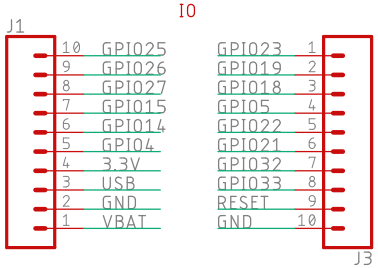

open hardware

TinyPICO™

A Tiny Mighty ESP32 Development Board

Title: Proto Shield	Rev: 1
02/05/2019	Unexpected Maker
Sheet: 1	unexpectedmaker.com