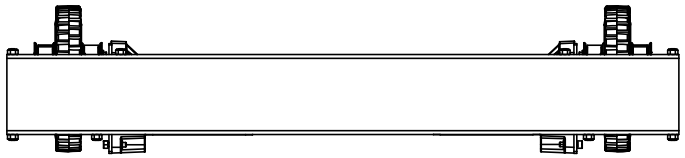

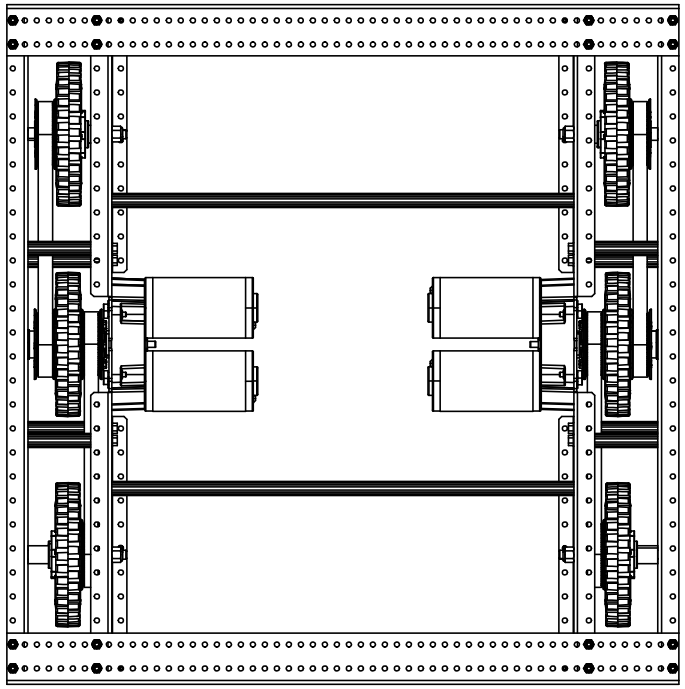

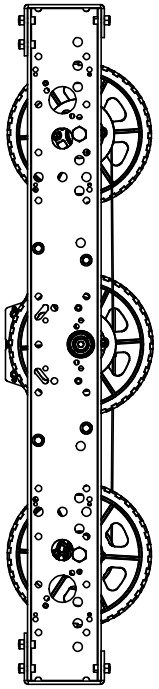

		UNLESS OTHERWISE SPECIFIED:		NAME	DATE
		DIMENSIONS ARE IN INCHES	DRAWN		
		TOLERANCES:	CHECKED		
		FRACTIONAL ±			
		ANGULAR: MACH ± BEND ±	ENG APPR.		
		TWO PLACE DECIMAL ±	MFG APPR.		
		THREE PLACE DECIMAL ±	Q.A.		
		INTERPRET GEOMETRIC TOLERANCING PER:	COMMENTS:		
		MATERIAL			
		FINISH			
NEXT ASSY	USED ON				
APPLICATION		DO NOT SCALE DRAWING			

TITLE:
Square Chassis

SIZE	DWG. NO.	REV
E	1	1

SCALE: 1:2 WEIGHT: SHEET 1 OF 3

PROPRIETARY AND CONFIDENTIAL
THE INFORMATION CONTAINED IN THIS DRAWING IS THE SOLE PROPERTY OF <INSERT COMPANY NAME HERE>. ANY REPRODUCTION IN PART OR AS A WHOLE WITHOUT THE WRITTEN PERMISSION OF <INSERT COMPANY NAME HERE> IS PROHIBITED.

SOLIDWORKS Educational Product. For Instructional Use Only.

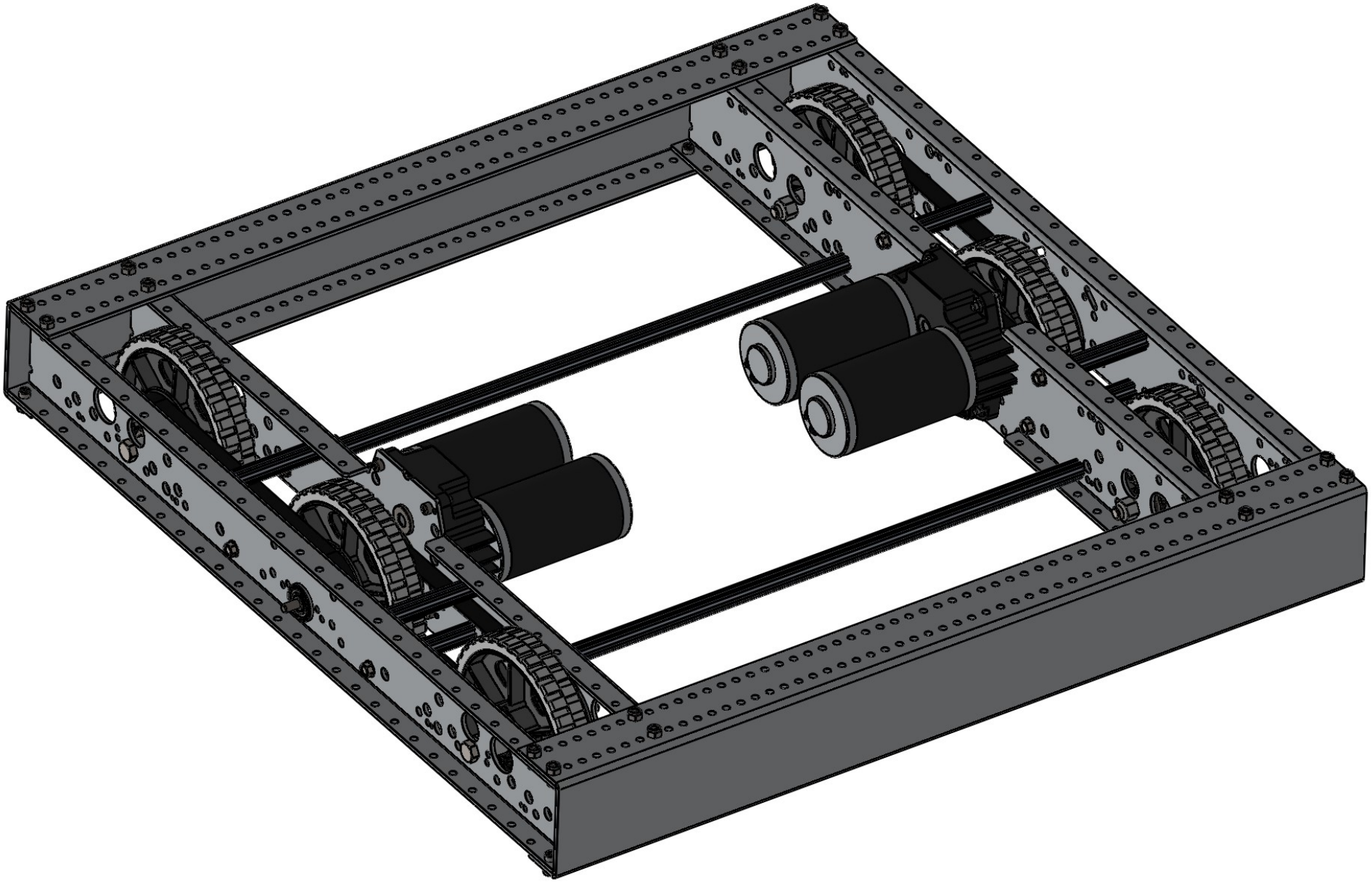

		UNLESS OTHERWISE SPECIFIED:		NAME	DATE
		DIMENSIONS ARE IN INCHES	DRAWN		
		TOLERANCES:	CHECKED		
		FRACTIONAL ±			
		ANGULAR: MACH ± BEND ±	ENG APPR.		
		TWO PLACE DECIMAL ±	MFG APPR.		
		THREE PLACE DECIMAL ±	Q.A.		
		INTERPRET GEOMETRIC TOLERANCING PER:	COMMENTS:		
		MATERIAL			
		FINISH			
NEXT ASSY	USED ON				
APPLICATION		DO NOT SCALE DRAWING			

TITLE:
Square Chassis Isometric

SIZE	DWG. NO.	REV
E	2	1

SCALE: 1:1 WEIGHT: SHEET 2 OF 3

PROPRIETARY AND CONFIDENTIAL:
THE INFORMATION CONTAINED IN THIS DRAWING IS THE SOLE PROPERTY OF <INSERT COMPANY NAME HERE>. ANY REPRODUCTION IN PART OR AS A WHOLE WITHOUT THE WRITTEN PERMISSION OF <INSERT COMPANY NAME HERE> IS PROHIBITED.

SOLIDWORKS Educational Product. For Instructional Use Only.

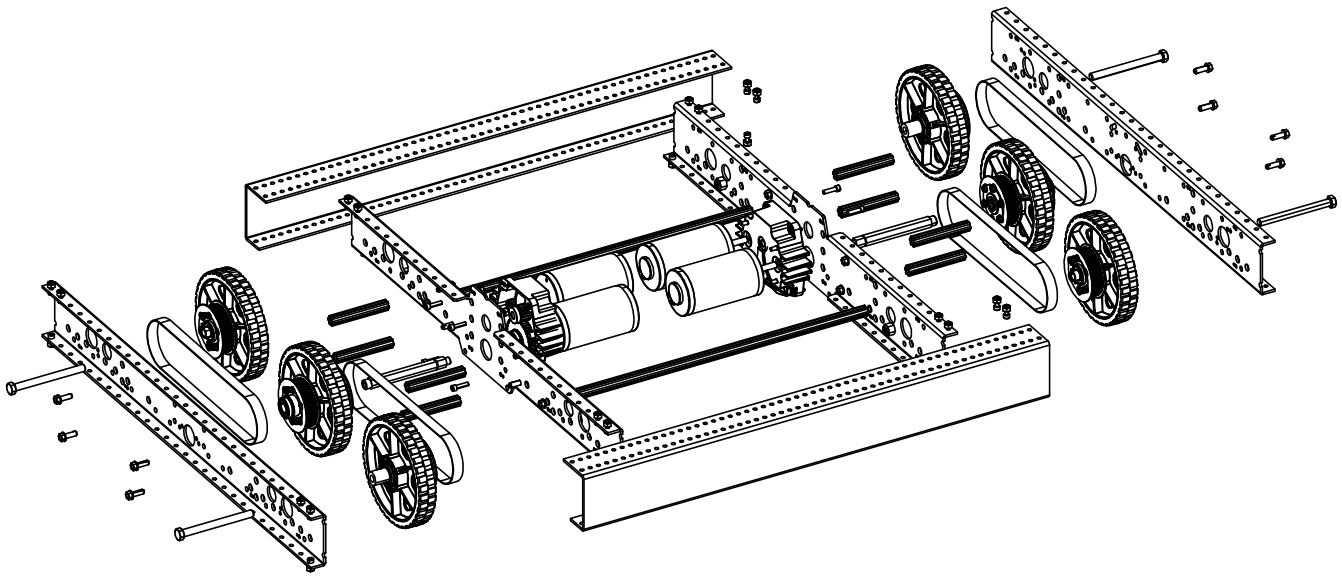

ITEM NO.	PART NUMBER	QTY.
1	10-32x0500_shcs_HX-SHCS 0.19-32x1.375x1-C.step	24
2	10-32 Nylock Nut 1_90631A411.step	32
3	am-3920 AM14U Family End Plate_Square Configuration.step	2
4	am-3922a AM14U5 Inside Plate_Square Configuration.step	2
5	am-3921a AM14U5 Outside Plate_Square Configuration.step	2
6	3.375in Churro_Square Configuration.step	8
7	FHTS 0.25-20-0.75_Square Configuration.step	20
8	AM14U Family Cross Chassis Churro_Square Configuration.step	2
9	ip-2566b Toughbox Hex Output Shaft For AM14U5.step	2
10	250x1000_dowel.step	4
11	TM Housing.step	2
12	Toughbox d07.step	2
13	FR6ZZ Bearing.step	2
14	am-2986 FR8ZZ Hex Bearing.step	2
15	R6ZZ Bearing.step	4
16	5-16 washer.step	8
17	SHCS 10-32 x 0.625.step	8
18	14T CIM Gear.step	4
19	8mm spring clip.step	4
20	2mm x 2mm x 10mm Machine Key.step	4
21	CIM Motor SW.step	4
22	SHCS 10-32 x 0.75.step	8
23	16t 20dp 375h with teeth.step	2
24	50T 20dp 375hex_Inch - Spur gear 20DP 50T 14.5PA .372FW --- S50N3.0H2.0L0.25N.step	2
25	48t 20dp 500h with teeth.step	2
26	.500 in 97431A340_SIDE-MOUNT EXTERNAL RETAINING RING E-STYLE_97431A340.step	2
27	am-0030 FR8ZZ Bearing.step	2
28	6 wheel Rev 4.step	6
29	6 wheel tread II.step	6
30	am-1305 500 Hex Spacer.step	2
31	42 tooth HTD Pulley half 2020.step	16
32	am-1592 HHCS 10-12 x 1125 Self Piercing_90197A247.step	48
33	am-4124 500Hex Hub.step	2
34	1614Z Bearing.step	8
35	am-1306 spacer 0280 WashersUSA 13RS052001.step	4
36	am-1307 850 long 380 id.step	4
37	375-16 x 4.25 Hex Bolt_HFBOLT 0.375-16x2.5x1-C.step	4
38	375-16 Lock Nut_91831A127.step	4
39	am-2571 655-5M-15 Timing Belt.step	4

UNLESS OTHERWISE SPECIFIED:
DIMENSIONS ARE IN INCHES
TOLERANCES:
FRACTIONAL ±
ANGULAR: MACH ± BEND ±
TWO PLACE DECIMAL ±
THREE PLACE DECIMAL ±
INTERPRET GEOMETRIC TOLERANCING PER:
MATERIAL
FINISH
NEXT ASSY | USED ON
APPLICATION | DO NOT SCALE DRAWING

NAME | DATE
DRAWN
CHECKED
ENG APPR.
MFG APPR.
Q.A.
COMMENTS:

TITLE:
Square Chassis Exploded

SIZE E | DWG. NO. 3 | REV 1
SCALE: 1:2 WEIGHT: | SHEET 3 OF 3

PROPRIETARY AND CONFIDENTIAL:
THE INFORMATION CONTAINED IN THIS DRAWING IS THE SOLE PROPERTY OF <INSERT COMPANY NAME HERE>. ANY REPRODUCTION IN PART OR AS A WHOLE WITHOUT THE WRITTEN PERMISSION OF <INSERT COMPANY NAME HERE> IS PROHIBITED.

SOLIDWORKS Educational Product. For Instructional Use Only.