UNIVERSITY OF AUCKLAND
Waipapa Taumata Rau
NEW ZEALAND

SCIENCE

COMPSCI 714
Lecture 4: Learning with sequences - RNNs

What is sequential data and what is a Recurrent Neural Network (RNN)

Instructor: Thomas Lacombe

Learning outcomes

- **Identify and describe** sequential data
- **Explain** how a Recurrent Neural Network (RNN) process and learn from sequences
- **Describe** the limitations of vanilla RNNs
- **Explain** how gated architectures such as LSTM and GRU work and address the limitations of vanilla RNNs

Disclaimer/Acknowledgment:

Some of the following slides are reusing or adapting content from the Stanford CS230 and CS231n (2017) classes:

https://stanford.edu/~shervine/teaching/cs-230/

https://cs230.stanford.edu/

http://cs231n.stanford.edu/2017/

Extra resources

If you want to go further:

- *Hands-on Machine Learning with Scikit-Learn and PyTorch*, Géron A.
  - Chapters 14 and 15.

- *Deep Learning*, Goodfellow I. et al.
  - Part II Deep Networks, Chap. 10, Sequence Modelling: Recurrent and Recursive Nets.

Sequential data

- Sequential data:
  - $x^{<t>} = x^{<1>}, x^{<2>}, \ldots, x^{<T>}$
  - Ordered data
  - "Temporal" relationship between inputs

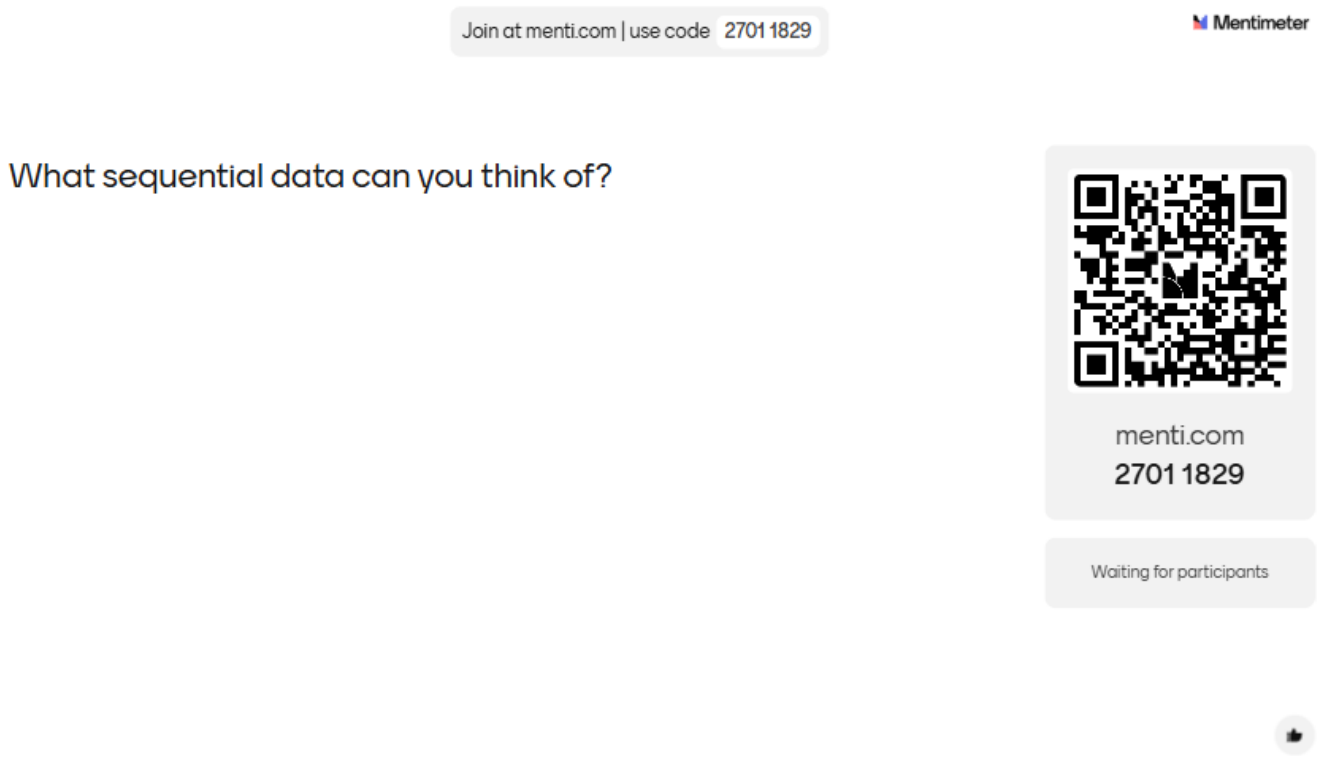

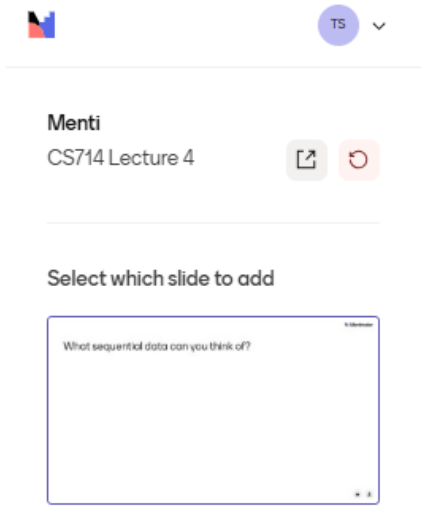

Sequential data

- Sequential data:
  - $x^{<t>} = x^{<1>}, x^{<2>}, \ldots, x^{<T>}$
  - Ordered data
  - Temporal relationship between inputs
  - E.g., text, music, video, DNA, …

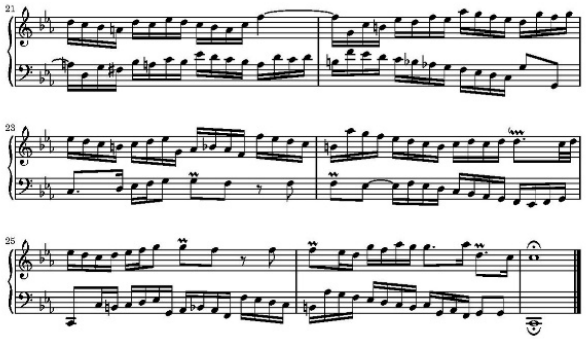

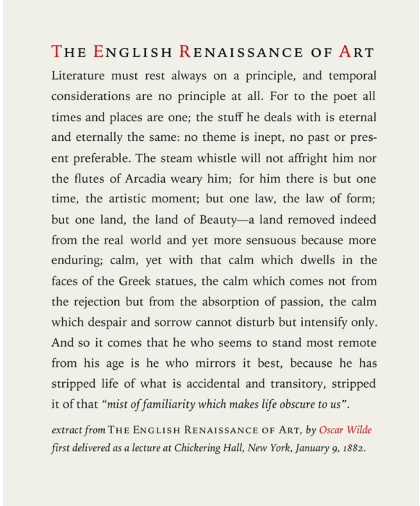

THE ENGLISH RENAISSANCE OF ART

Literature must rest always on a principle, and temporal considerations are no principle at all. For to the poet all times and places are one; the stuff he deals with is eternal and eternally the same: no theme is inept, no past or present preferable. The steam whistle will not affright him nor the flutes of Arcadia weary him; for him there is but one time, the artistic moment; but one law, the law of form; but one land, the land of Beauty—a land removed indeed from the real world and yet more sensuous because more enduring; calm, yet with that calm which dwells in the faces of the Greek statues, the calm which comes not from the rejection but from the absorption of passion, the calm which despair and sorrow cannot disturb but intensify only. And so it comes that he who seems to stand most remote from his age is he who mirrors it best, because he has stripped life of what is accidental and transitory, stripped it of that *"mist of familiarity which makes life obscure to us"*.

extract from THE ENGLISH RENAISSANCE OF ART, *by Oscar Wilde first delivered as a lecture at Chickering Hall, New York, January 9, 1882.*

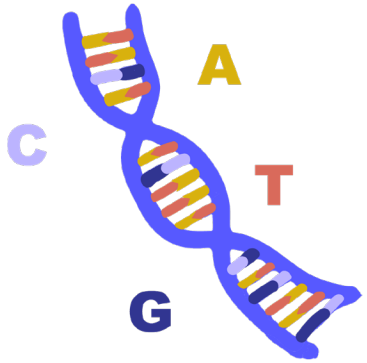

Various tasks

- **Sequence to Sequence (many-to-many)**
  - Maps input sequence (varying size) to output sequence (varying size)

Speech recognition:
Sound waveform → Text

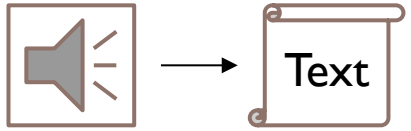

Music generation:
Text description → Music partition

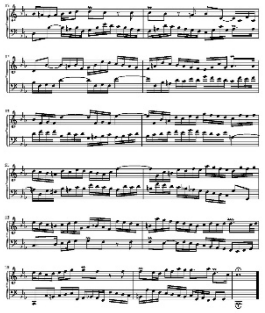

Code generation:
Description/partial code (text) → Code (text)

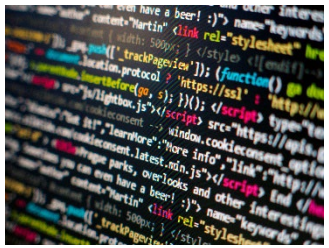

Machine translation
Text in source language → Text in target language

Various tasks

- **Single input to Sequence (one-to-many)**
  - Maps single input (fixed size input) to output sequence (varying size)

Image captioning: image → text

Music generation:

A short seed (e.g., a note) → Music partition

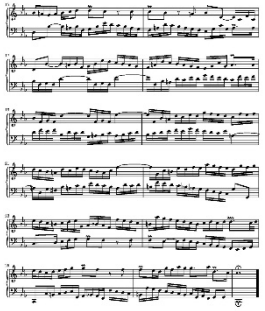

Various tasks

- **Sequence to Single output (many-to-one)**
  - Maps input sequence (varying size) to single output (fixed size)

Sentiment analysis

Text/speech (e.g., review) → sentiment label

Activity recognition from sensor data

Sensor data feed → activity label

Any sequence classification task

Sequence data → classification label

Dealing with sequences

- Imagine a text translation task (text → text / many → many)

  "Je fais de la science" → "I am doing science"

- Is a classic ANN/MLP fit for the task?

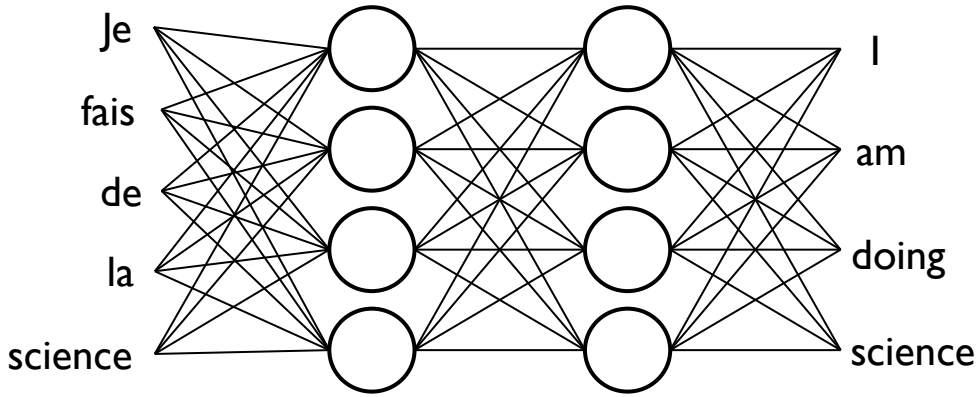

- 2 major problems:
  - Number and size of inputs and outputs can vary from one example to another.
  - Does not consider the temporal relationship.

Typical RNN architecture

- Simple RNN with one recurrent block:

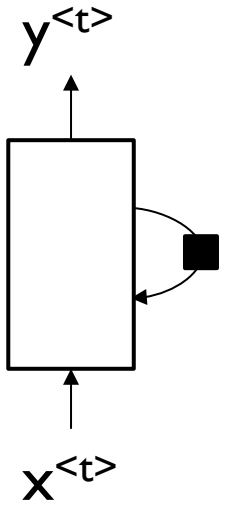

Typical RNN architecture

- Allow previous outputs to participate in the prediction.
- RNN "unfold" notation:

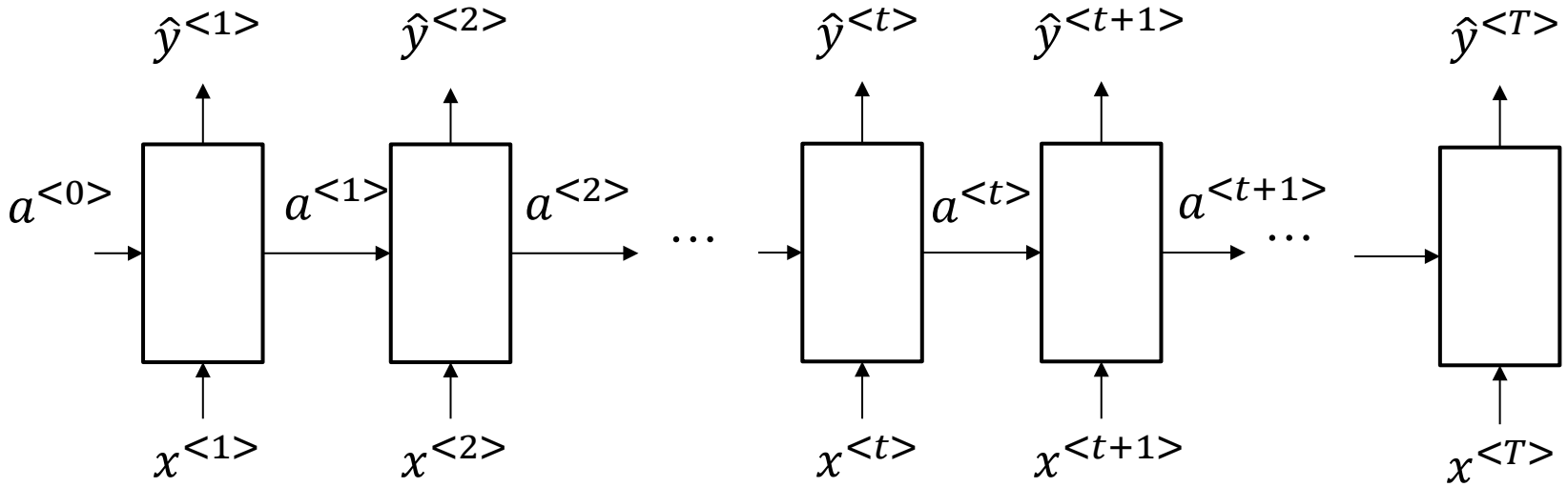

Typical RNN architecture

- Inside a block or "cell":

$W_{aa}, W_{ax}, W_{ay}, b_a$ and b_y are shared parameters across the sequence.

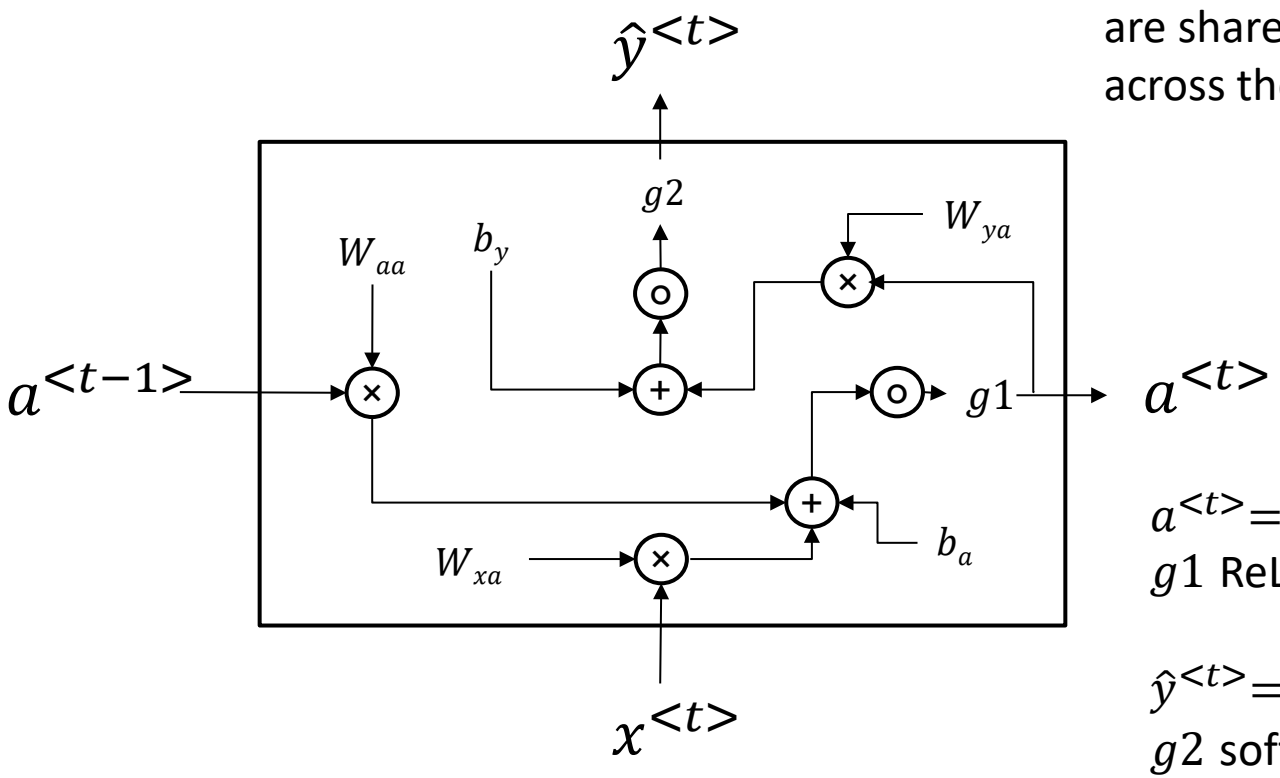

$$a^{<t>} = g1(W_{aa}a^{<t-1>} + W_{xa}x^{<t>} + b_a)$$

$g1$ ReLu, tanh, sigmoid

$$\hat{y}^{<t>} = g2(W_{ya}a^{<t>} + b_y)$$

$g2$ softmax, sigmoid, linear

Image source: https://stanford.edu/~shervine/teaching/cs-230/cheatsheet-recurrent-neural-networks

Typical RNN architecture

- RNN "unfold" notation:

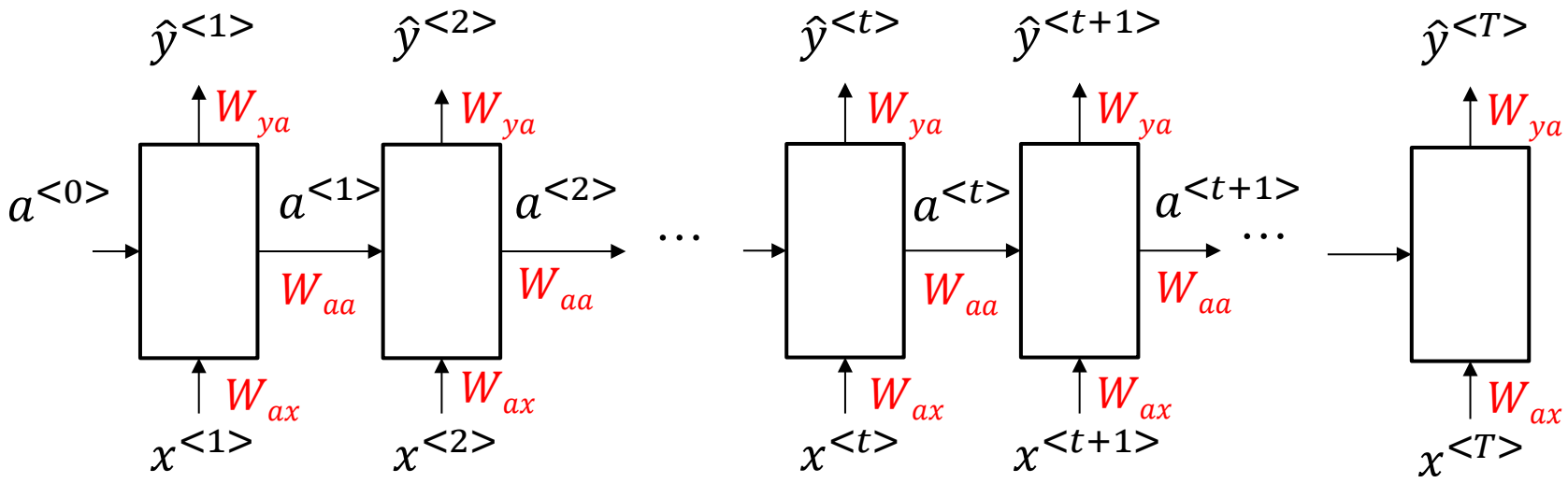

- Limitations:
  - Cannot consider future states/cells (solution: bidirectional RNN).
  - Long-term gradients can "vanish".

RNN process

1. Forward pass
   - Calculate each state through time with the previous equations
   - Calculate the loss (sum the losses at each or specific time steps)

2. Backward pass (Backpropagation Through Time - BPTT)
   - Gradients propagate backward through the network layers
   - Gradients also propagate backward through time along the sequence of hidden states
   - The unrolled computation graph is used to compute gradients

$$\frac{\partial L}{\partial W} = \sum_t \frac{\partial L^{<t>}}{\partial W}$$

3. Weight update
   - After accumulating gradients across timesteps, the optimiser updates the weights once

Several types of RNNs

- RNNs can take various forms depending on the application.

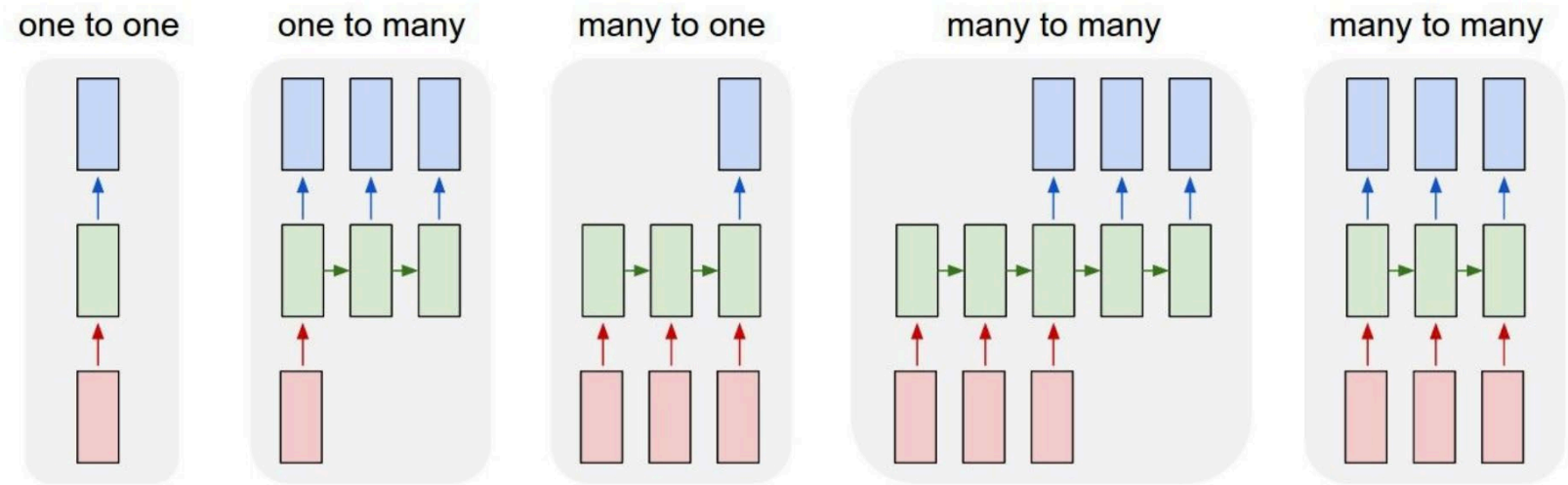

To go further:

https://cs231n.github.io/rnn/

https://stanford.edu/~shervine/teaching/cs-230/cheatsheet-recurrent-neural-networks

http://cs231n.stanford.edu/slides/2017/cs231n_2017_lecture10.pdf

Image source: https://cs231n.github.io/rnn/

Character-level language model

Let look at an example of a RNN task:

- **Task**: predict next character in a sequence (e.g. word)
- **Vocabulary**: possible characters in the sequence, e.g., [h,e,l,o]
- **Training sequence**: sequence of characters to train the RNN, e.g., ‘‘hello’’.

Source: Lecture 10 – Sandford CS231n 2017

Character-level langage model

- Goal: Learn to predict the word « hello »
- Vocabulary: [h,e,l,o]
- Input layer:
  - → Need to encode the letters before inputting them in the NN (one-hot encoding here)

"h"	"e"	"l"	"o"
1	0	0	0
0	1	0	0
0	0	1	0
0	0	0	1

Source: Lecture 10 – Sandford CS231n 2017

Character-level langage model

- Vocabulary: [h,e,l,o]

- Input layer:
  - → Need to encode the letters before inputting them in the NN (one-hot encoding here)

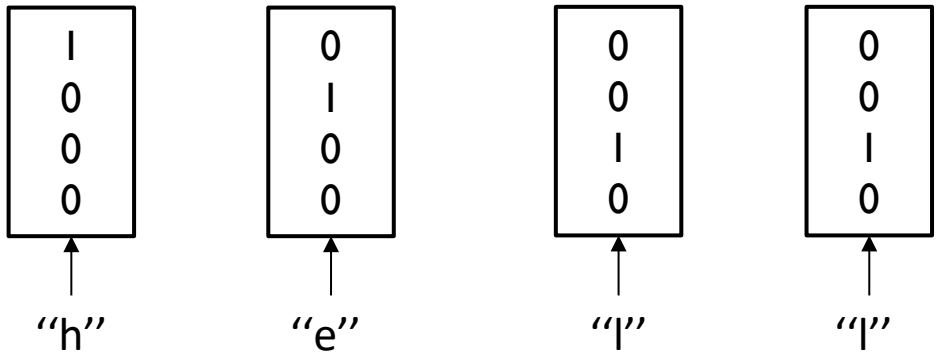

Source: Lecture 10 – Sandford CS231n 2017

Character-level langage model

- Vocabulary: [h,e,l,o]
- Hidden layer:

$$a^{<t>} = g1(W_{aa}a^{<t-1>} + W_{xa}x^{<t>} + b_a)$$

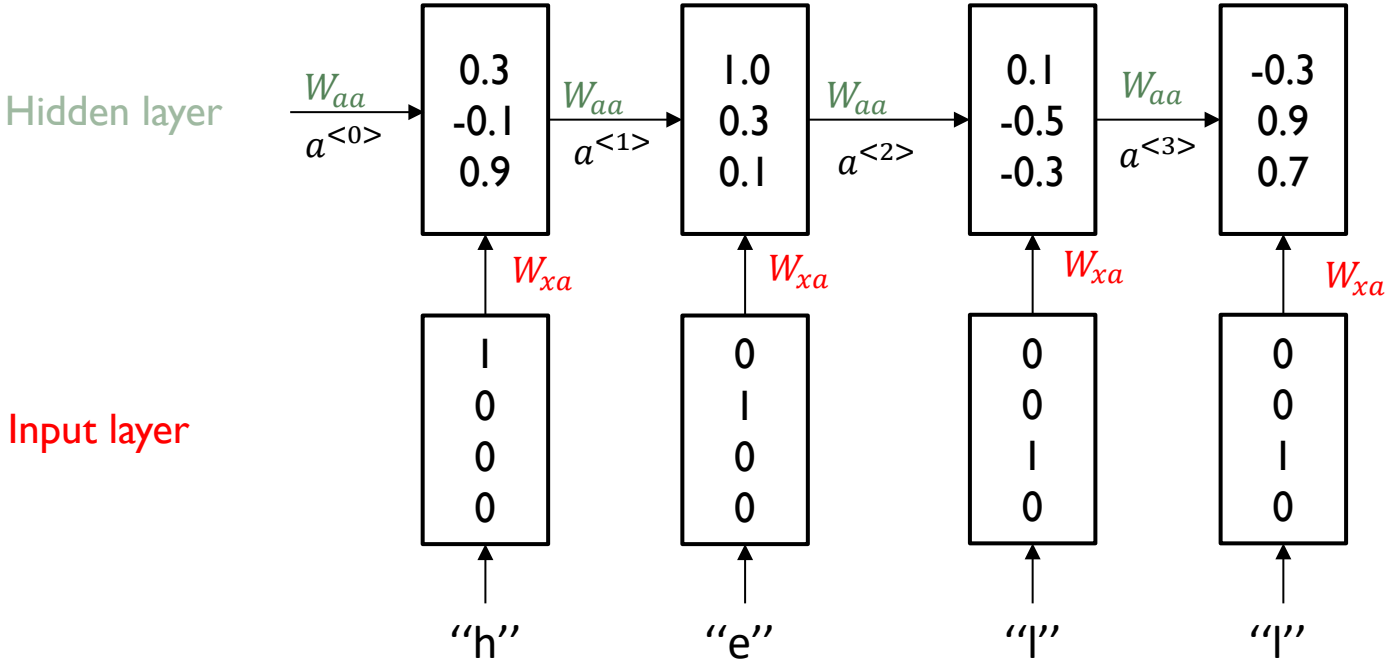

Source: Lecture 10 – Sandford CS231n 2017

Character-level langage model

- Vocabulary: [h,e,l,o]
- Output layer:

$$a^{<t>} = g1(W_{aa}a^{<t-1>} + W_{xa}x^{<t>} + b_a)$$
$$\hat{y}^{<t>} = g2(W_{ya}a^{<t>} + b_y)$$

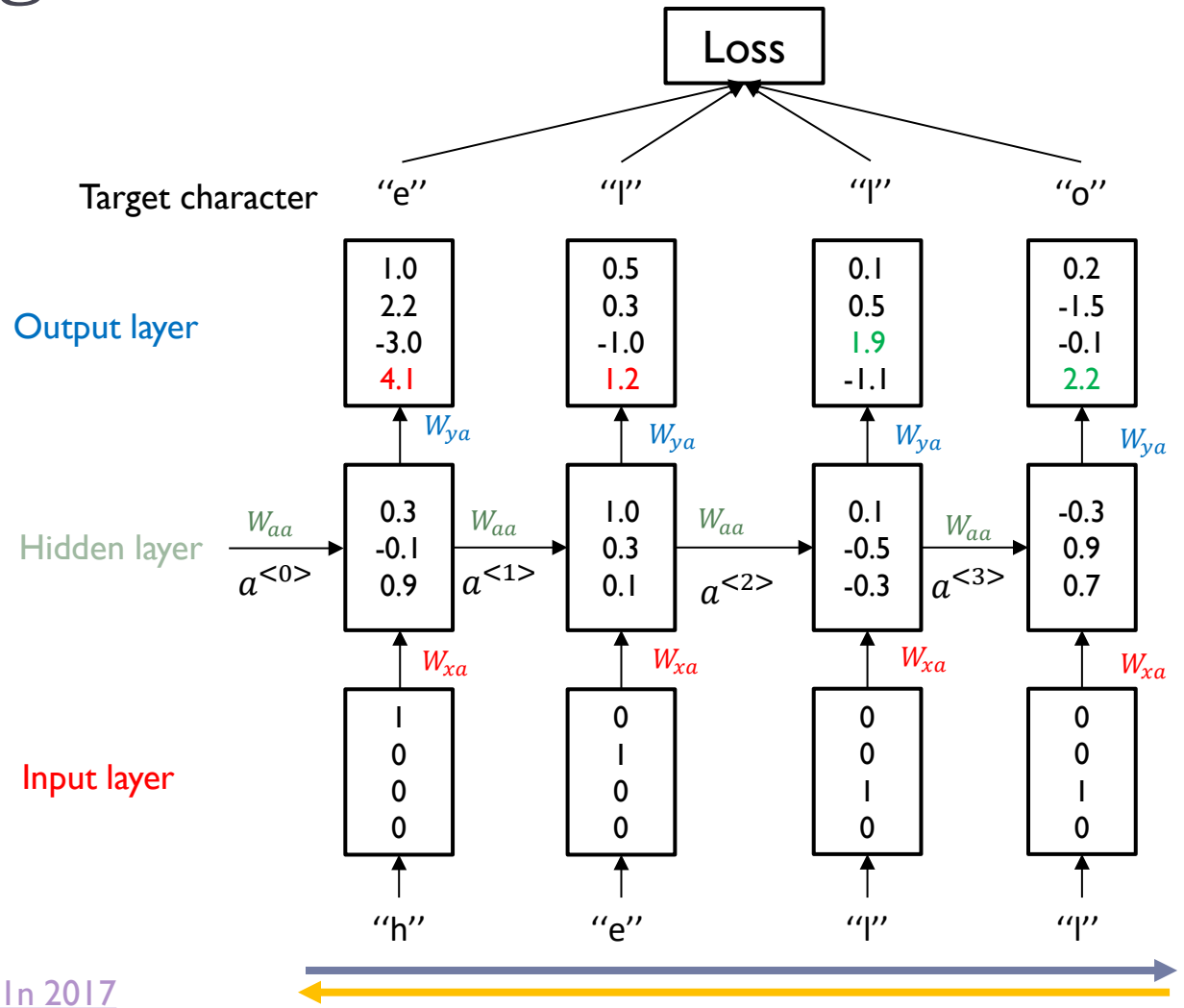

Forward pass

Backprop

Source: Lecture 10 – Sandford CS231n 2017

Character-level langage model

- Vocabulary: [h,e,l,o]
- Testing the model:

$$a^{<t>} = g1(W_{aa}a^{<t-1>} + W_{xa}x^{<t>} + b_a)$$
$$\hat{y}^{<t>} = g2(W_{ya}a^{<t>} + b_y)$$

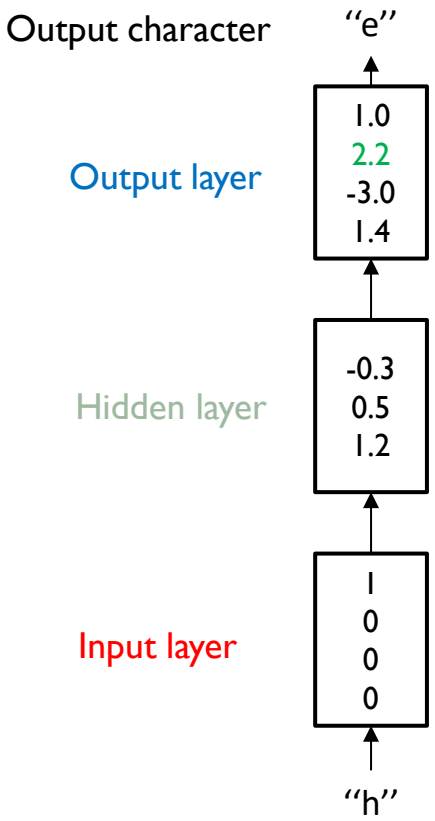

Source: Lecture 10 – Sandford CS231n 2017

Character-level langage model

- Vocabulary: [h,e,l,o]
- Testing the model:

$$a^{<t>} = g1(W_{aa}a^{<t-1>} + W_{xa}x^{<t>} + b_a)$$
$$\hat{y}^{<t>} = g2(W_{ya}a^{<t>} + b_y)$$

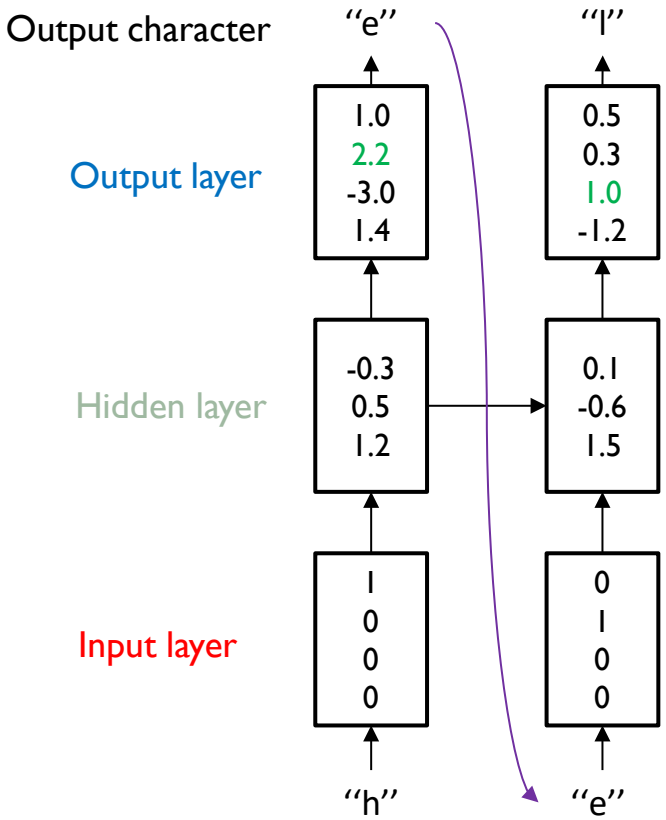

Source: Lecture 10 – Sandford CS231n 2017

Character-level langage model

- Vocabulary: [h,e,l,o]
- Testing the model:

$$a^{<t>} = g1(W_{aa}a^{<t-1>} + W_{xa}x^{<t>} + b_a)$$
$$\hat{y}^{<t>} = g2(W_{ya}a^{<t>} + b_y)$$

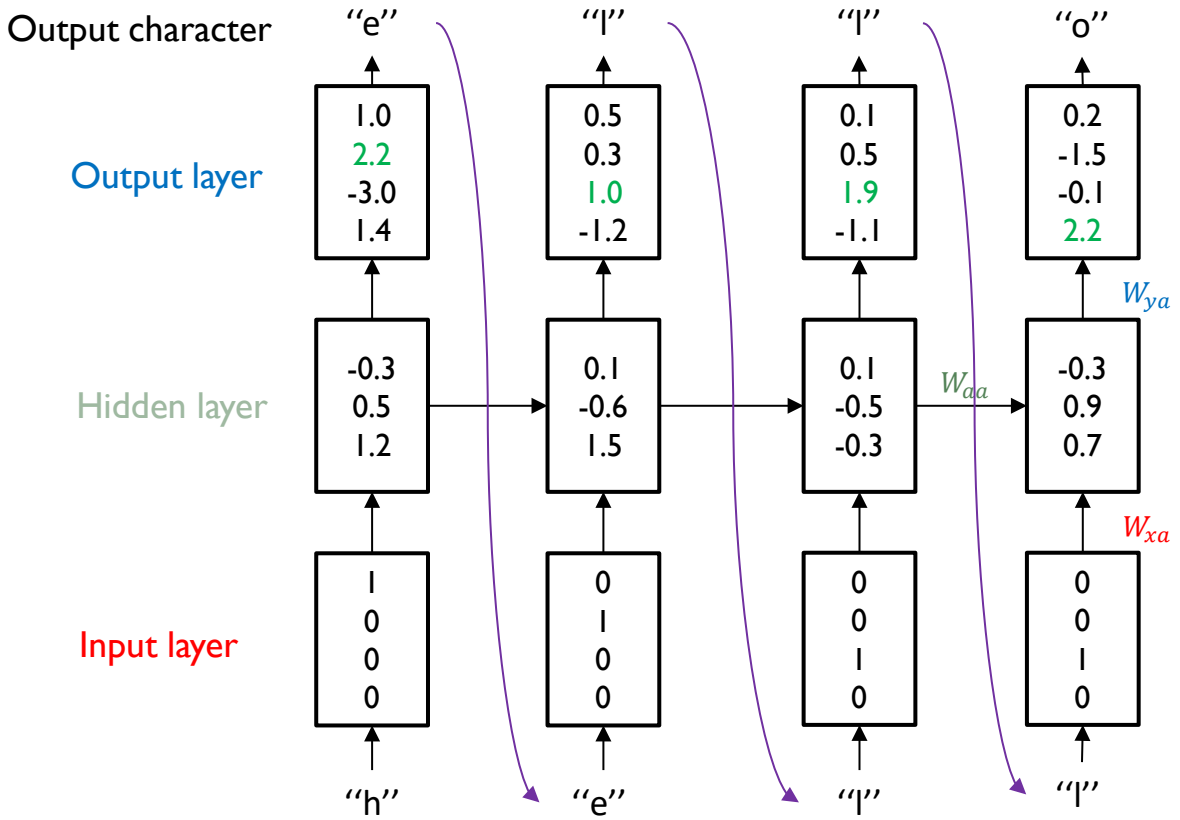

Source: Lecture 10 – Sandford CS231n 2017

Character-level langage model

- Vocabulary: [h,e,l,o]
- Testing the model:

$$a^{<t>} = g1(W_{aa}a^{<t-1>} + W_{xa}x^{<t>} + b_a)$$
$$\hat{y}^{<t>} = g2(W_{ya}a^{<t>} + b_y)$$

- Could choose the output character based on probility following the softmax distribution and not argmax (include some diversity in the output sequence).

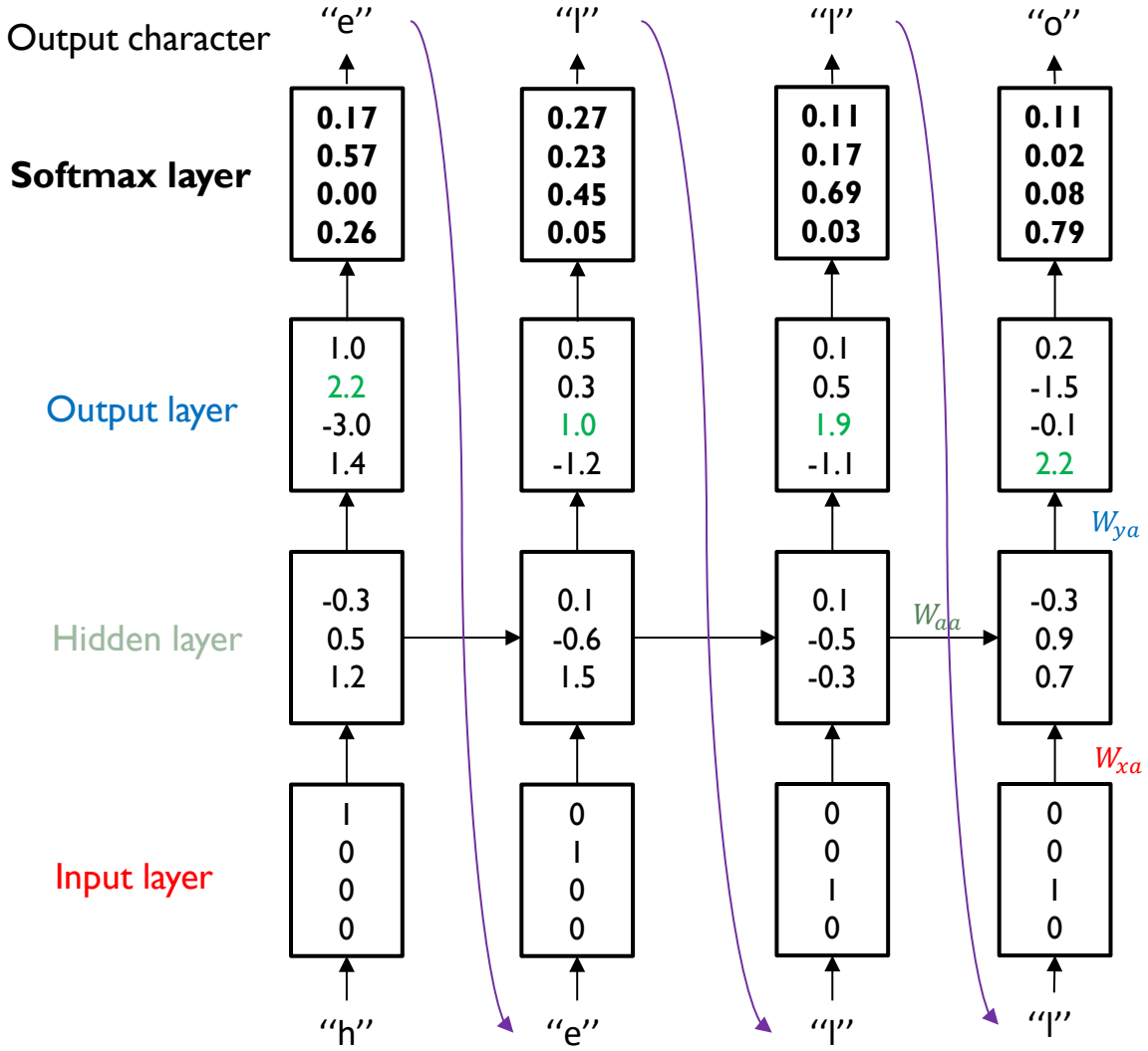

Source: Lecture 10 – Sandford CS231n 2017

Backpropagation in RNN

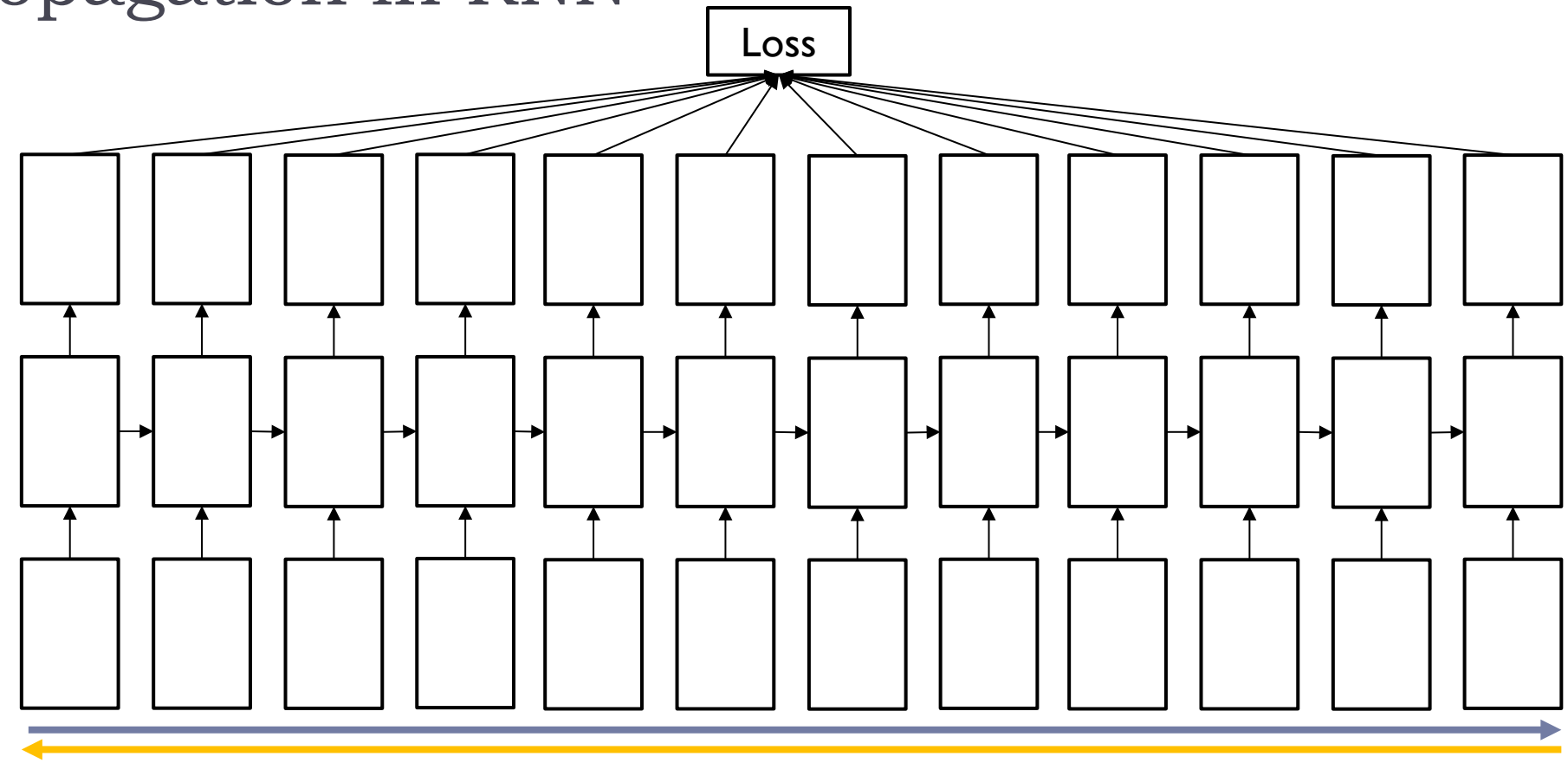

- Problem: forward pass and backpropagation with very long sequences is very computationally expensive!

Source: Lecture 10 – Sandford CS231n 2017

Backpropagation in RNN

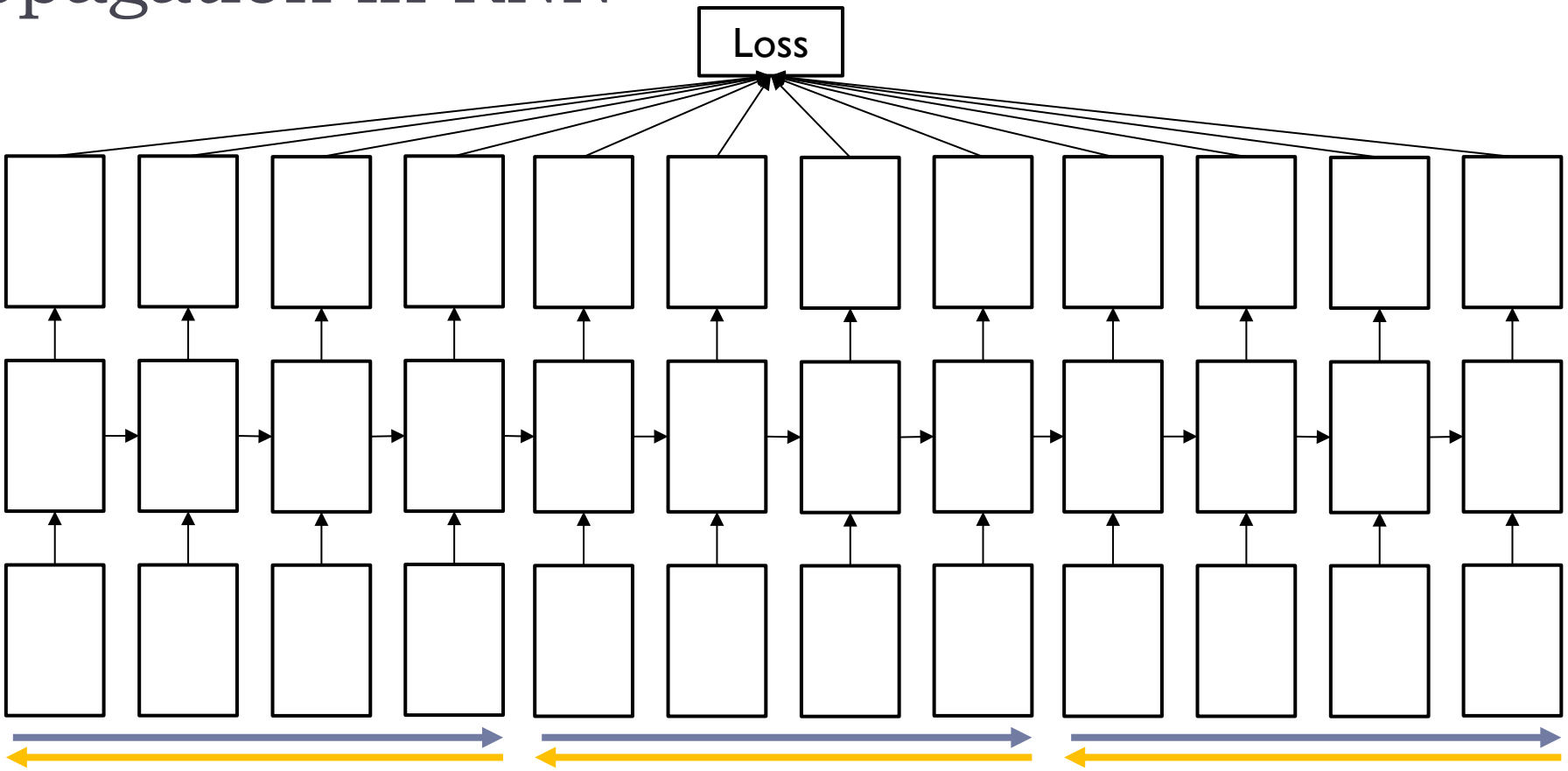

- Solution: truncated backpropagation → forward pass and backprop for a chunk of the sequence (parallel with Mini-batch GD)

Source: Lecture 10 – Sandford CS231n 2017

Stacking several layers – Deep RNN

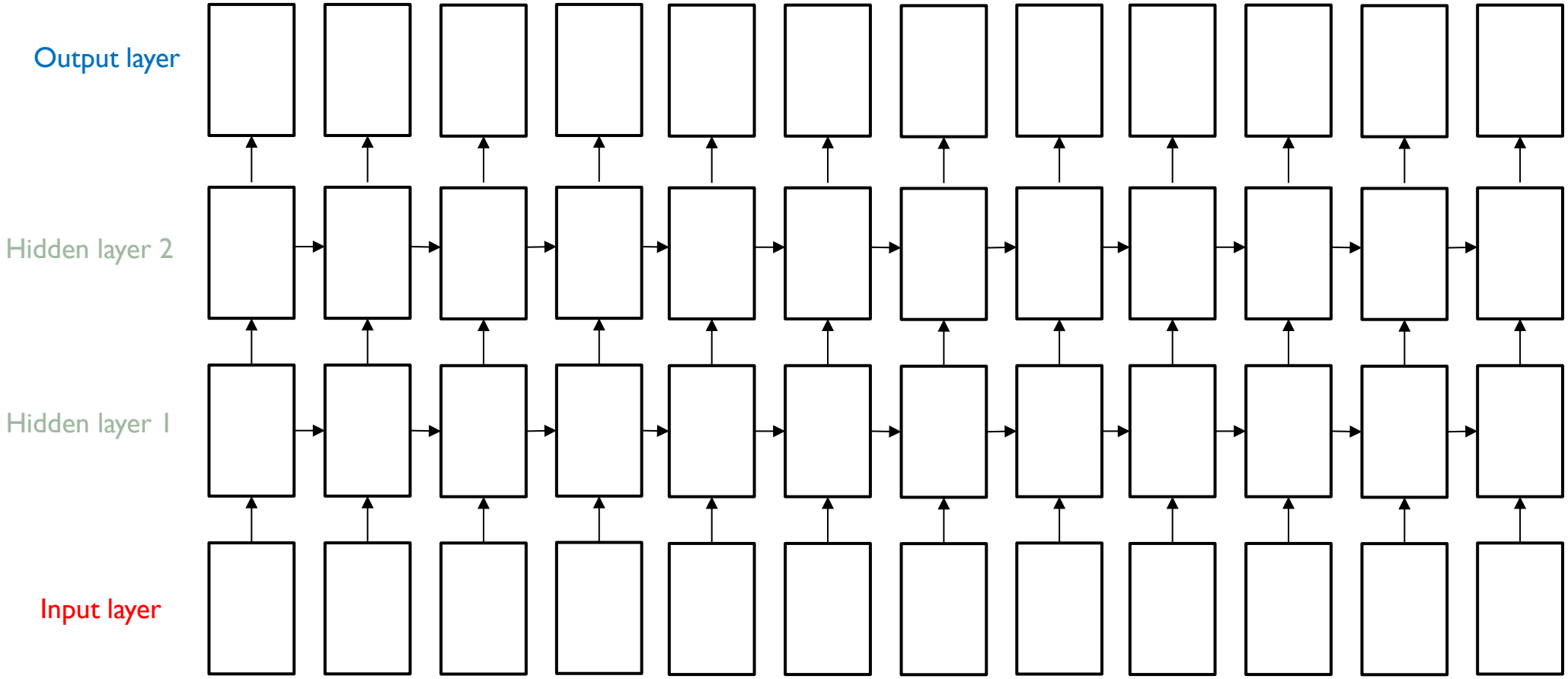

Visualising RNN

- What about tracking what the RNN cells are focusing on?
  - Tracking the value of a hidden vector for each sequence time step.

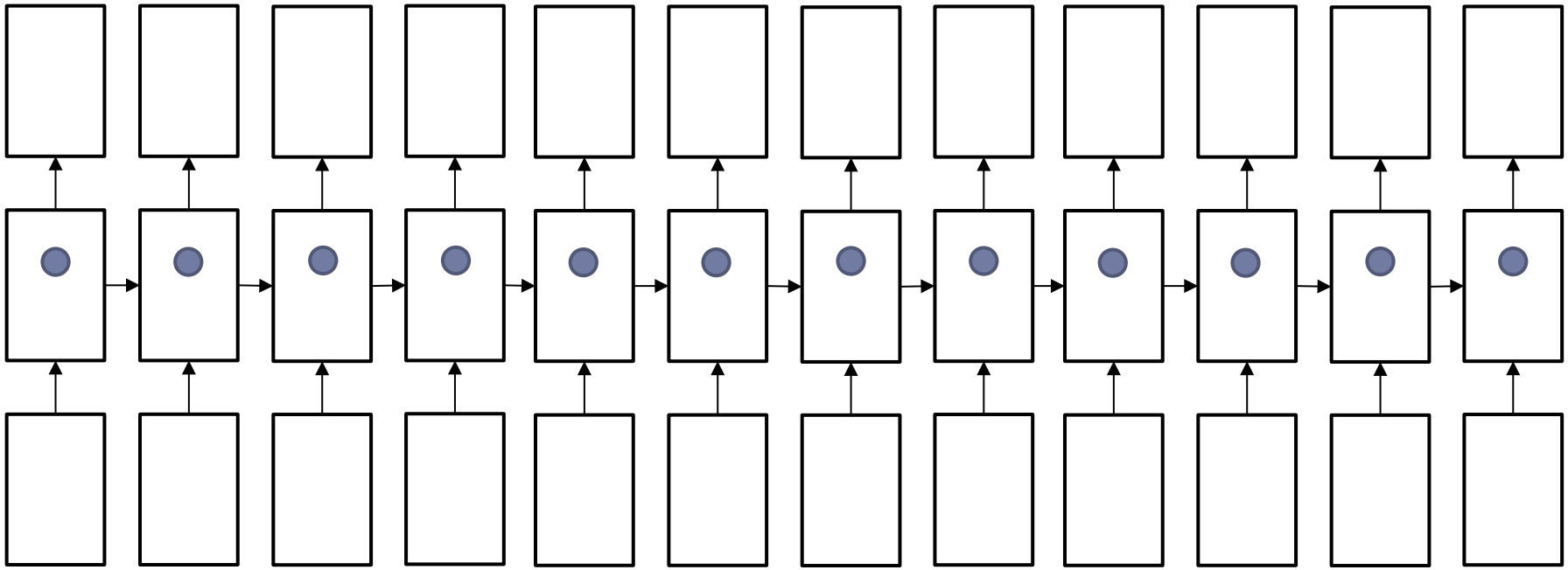

- Example output for a cell hidden vector: This is a generated text.

Source: Lecture 10 – Sandford CS231n 2017
Karpathy, Johnson, and Fei-Fei: Visualizing and Understanding Recurrent Networks, ICLR Workshop 2016

Visualising RNN

A large portion of cells are not easily interpretable. Here is a typical example:

```
/* Unpack a filter field's string representation from user-space
 * buffer. */
char *audit_unpack_string(void **bufp, size_t *remain, size_t len)
{
  char *str;
  if (!*bufp || (len == 0) || (len > *remain))
    return ERR_PTR(-EINVAL);
  /* Of the currently implemented string fields, PATH_MAX
   * defines the longest valid length.
   */
```

Cell sensitive to position in line:

```
The sole importance of the crossing of the Berezina lies in the fact
that it plainly and indubitably proved the fallacy of all the plans for
cutting off the enemy's retreat and the soundness of the only possible
line of action--the one Kutuzov and the general mass of the army
demanded--namely, simply to follow the enemy up. The French crowd fled
at a continually increasing speed and all its energy was directed to
reaching its goal. It fled like a wounded animal and it was impossible
to block its path. This was shown not so much by the arrangements it
made for crossing as by what took place at the bridges. When the bridges
broke down, unarmed soldiers, people from Moscow and women with children
who were with the French transport, all--carried on by vis inertiae--
pressed forward into boats and into the ice-covered water and did not,
surrender.
```

Cell that turns on inside quotes:

```
"You mean to imply that I have nothing to eat out of.... On the
contrary, I can supply you with everything even if you want to give
dinner parties," warmly replied Chichagov, who tried by every word he
spoke to prove his own rectitude and therefore imagined Kutuzov to be
animated by the same desire.

Kutuzov, shrugging his shoulders, replied with his subtle penetrating
smile: "I meant merely to say what I said."
```

Cell that robustly activates inside if statements:

```
static int __dequeue_signal(struct sigpending *pending, sigset_t *mask,
    siginfo_t *info)
{
  int sig = next_signal(pending, mask);
  if (sig) {
    if (current->notifier) {
      if (sigismember(current->notifier_mask, sig)) {
        if (!(current->notifier)(current->notifier_data)) {
          clear_thread_flag(TIF_SIGPENDING);
          return 0;
        }
      }
    }
    collect_signal(sig, pending, info);
  }
  return sig;
}
```

Karpathy, Johnson, and Fei-Fei: Visualizing and Understanding Recurrent Networks, ICLR Workshop 2016

Visualising RNN

Cell that turns on inside comments and quotes:

```
/* Duplicate LSM field information.  The lsm_rule is opaque, so
 * re-initialized. */
static inline int audit_dupe_lsm_field(struct audit_field *df,
                 struct audit_field *sf)
{
  int ret = 0;
  char *lsm_str;
  /* our own copy of lsm_str */
  lsm_str = kstrdup(sf->lsm_str, GFP_KERNEL);
  if (unlikely(!lsm_str))
    return -ENOMEM;
  df->lsm_str = lsm_str;
  /* our own (refreshed) copy of lsm_rule */
  ret = security_audit_rule_init(df->type, df->op, df->lsm_str,
                 (void **)&df->lsm_rule);
  /* Keep currently invalid fields around in case they
   * become valid after a policy reload. */
  if (ret == -EINVAL) {
    pr_warn("audit rule for LSM \'%s\' is invalid\n",
      df->lsm_str);
    ret = 0;
  }
  return ret;
}
```

Cell that is sensitive to the depth of an expression:

```
#ifdef CONFIG_AUDITSYSCALL
static inline int audit_match_class_bits(int class, u32 *mask)
{
  int i;
  if (classes[class]) {
    for (i = 0; i < AUDIT_BITMASK_SIZE; i++)
      if (mask[i] & classes[class][i])
        return 0;
  }
  return 1;
}
```

Cell that might be helpful in predicting a new line. Note that it only turns on for some ")":

```
char *audit_unpack_string(void **bufp, size_t *remain, si
{
  char *str;
  if (!*bufp || (len == 0) || (len > *remain))
    return ERR_PTR(-EINVAL);
  /* Of the currently implemented string fields, PATH_MAX
   * defines the longest valid length.
   */
  if (len > PATH_MAX)
    return ERR_PTR(-ENAMETOOLONG);
  str = kmalloc(len + 1, GFP_KERNEL);
  if (unlikely(!str))
    return ERR_PTR(-ENOMEM);
  memcpy(str, *bufp, len);
  str[len] = 0;
  *bufp += len;
  *remain -= len;
  return str;
}
```

Karpathy, Johnson, and Fei-Fei: Visualizing and Understanding Recurrent Networks, ICLR Workshop 2016

Example: Image captionning

- Example of combining CNN and RNN:

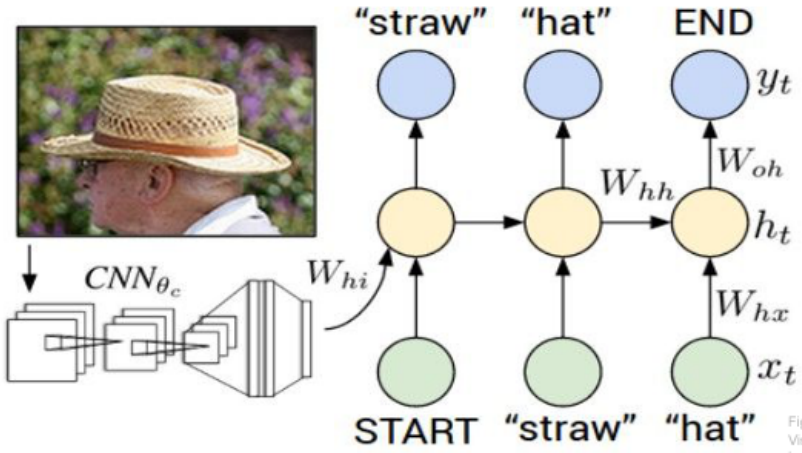

Figure from Karpathy et a, "Deep Visual-Semantic Alignments for Generating Image Descriptions", CVPR 2015; figure copyright IEEE, 2015. Reproduced for educational purposes.

Explain Images with Multimodal Recurrent Neural Networks, Mao et al.
Deep Visual-Semantic Alignments for Generating Image Descriptions, Karpathy and Fei-Fei
Show and Tell: A Neural Image Caption Generator, Vinyals et al.
Long-term Recurrent Convolutional Networks for Visual Recognition and Description, Donahue et al.
Learning a Recurrent Visual Representation for Image Caption Generation, Chen and Zitnick

- https://www.youtube.com/watch?v=6niqTuYFZLQ&ab_channel=StanfordUniversitySchoolofEngineering : at 39'05''

Image source: Lecture 10 – Sandford CS231n 2017

Problem with Vanilla RNN

- Another problem with vanilla RNN?
  - Computing backpropagation of the gradient involves lots of multiplications by weight matrices.

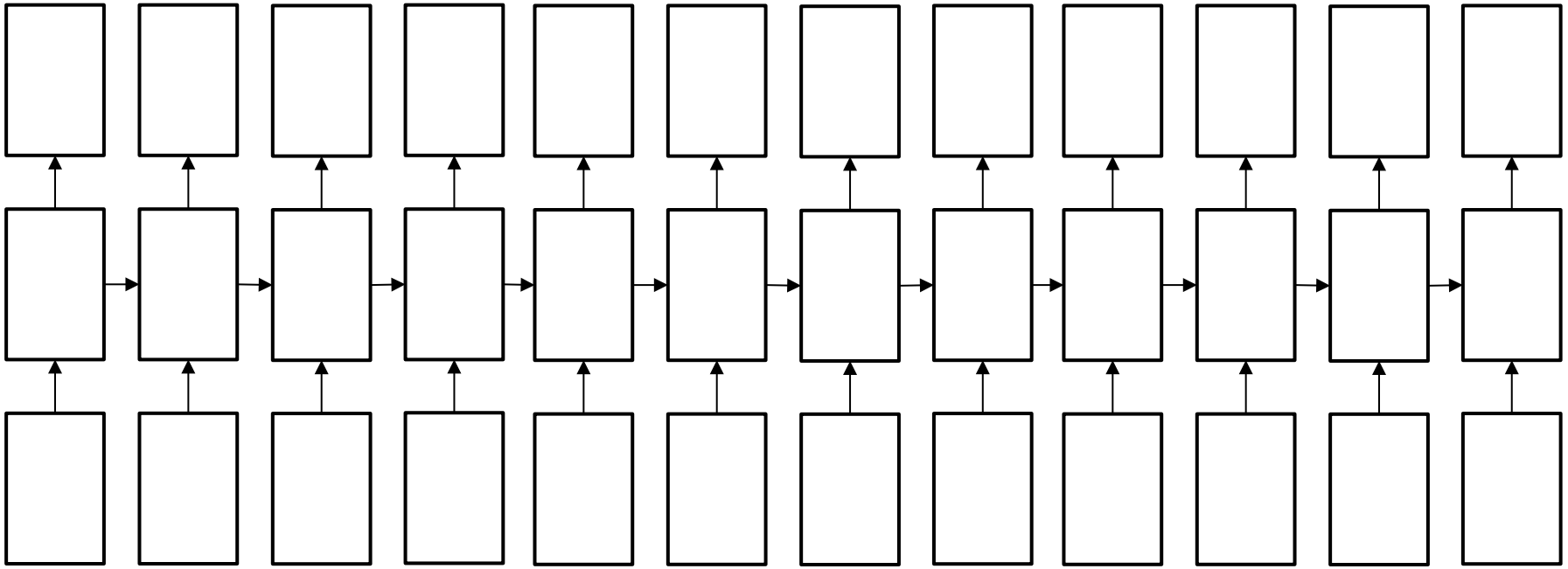

- Exploding/vanishing gradients are back!

RNN vs LSTM cells

- LSTM make use of a long-term state *c* (sometimes called memory cell) and *gates* to improve gradient flow
- Intuition: the long-term state is used to remember values and the gates are used to control the flow of information coming in and out of it.

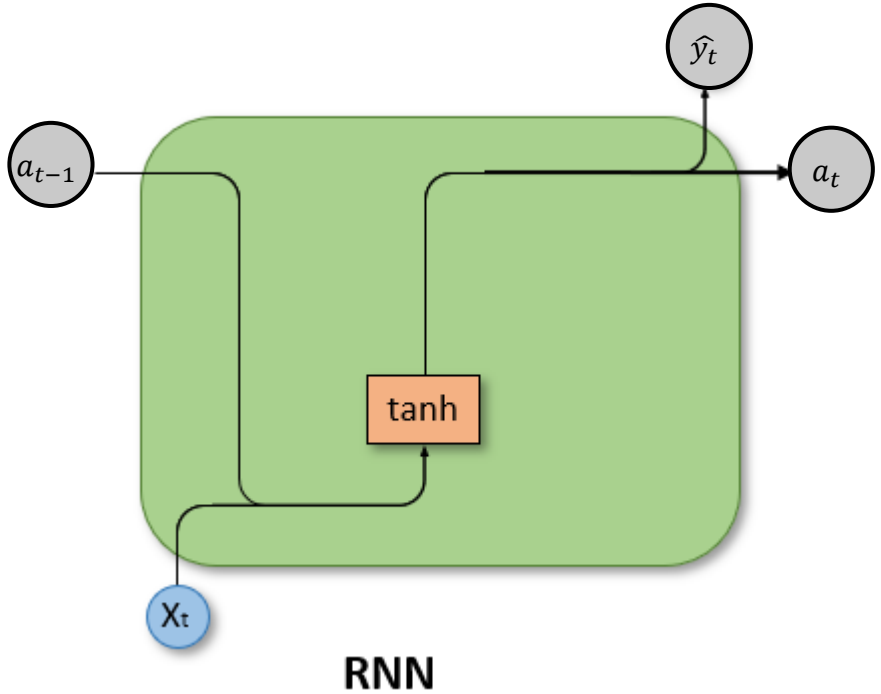

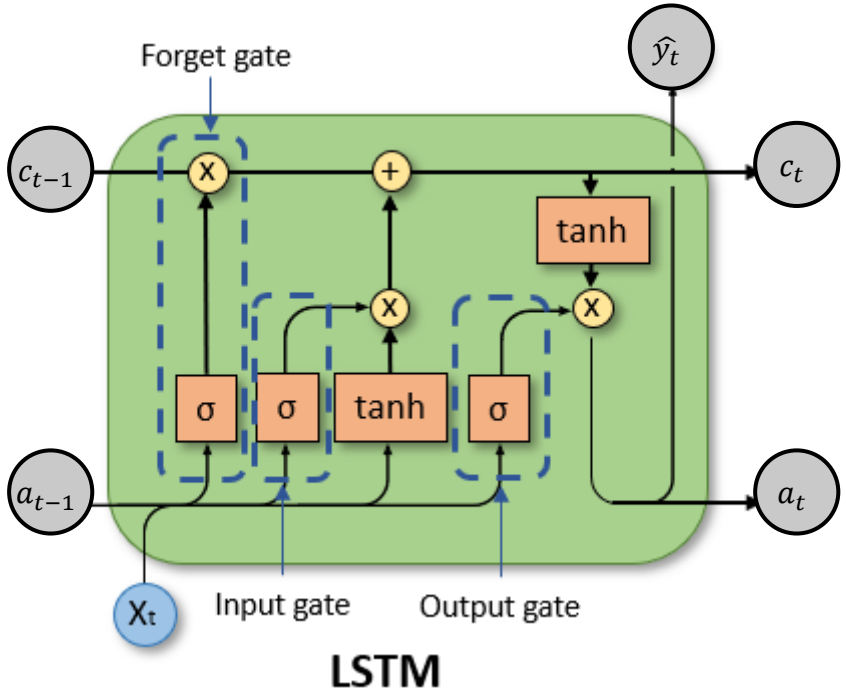

Image source: https://towardsdatascience.com/illustrated-guide-to-lstms-and-gru-s-a-step-by-step-explanation-44e9eb85bf21

LSTM vs GRU

- GRU simplifies LSTM design by using less gates (e.g., less parameters)

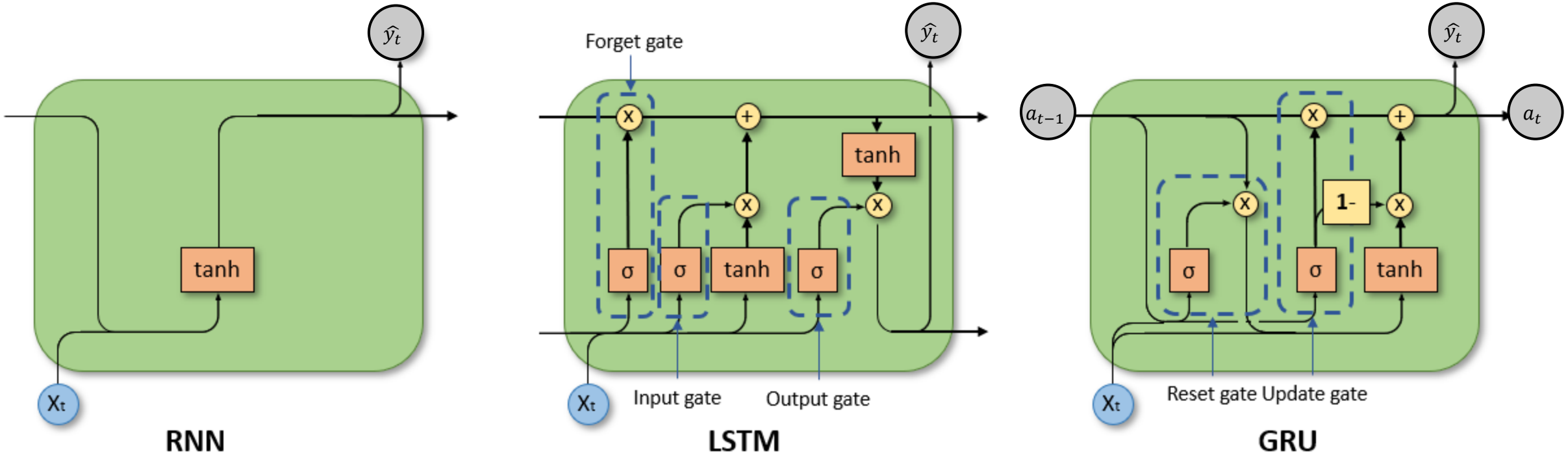

- In practice, LSTM or GRU are used instead of vanilla RNN.

Image source: https://towardsdatascience.com/illustrated-guide-to-lstms-and-gru-s-a-step-by-step-explanation-44e9eb85bf21

To go further

- Analysis of RNN architectures:

  Stanford lecture on RNNs on Youtube / Stanford slides

  https://stanford.edu/~shervine/teaching/cs-230/cheatsheet-recurrent-neural-networks

  https://cs231n.github.io/rnn/

  https://towardsdatascience.com/illustrated-guide-to-lstms-and-gru-s-a-step-by-step-explanation-44e9eb85bf21

- LSTM: [Long Short-Term Memory, Hochreiter 1997]

  http://citeseerx.ist.psu.edu/viewdoc/download?doi=10.1.1.676.4320&rep=rep1&type=pdf

- GRU: [Learning phrase representations using rnn encoder-decoder for statistical machine translation, Cho et al., 2014]

  https://arxiv.org/pdf/1406.1078.pdf

  [Empirical Evaluation of Gated Recurrent Neural Networks on Sequence Modeling, Chung et al., 2014]

  https://arxiv.org/pdf/1412.3555.pdf

To go further

- Other RNN variants

  [LSTM: A Search Space Odyssey, Greff et al., 2015]

  https://ieeexplore.ieee.org/stamp/stamp.jsp?arnumber=7508408&casa_token=y_ZvObuz3N4AAAAA:1ZL1v1E9q5E574vjFN6jj2QCrskNOKIOO6K4F9UfdLtm-cf3ZZkSis6UrkFoTIwAq22gCv_hJxY&tag=1

  [An Empirical Exploration of Recurrent Network Architectures, Jozefowicz et al., 2015]

  http://proceedings.mlr.press/v37/jozefowicz15.pdf

Conclusion memes

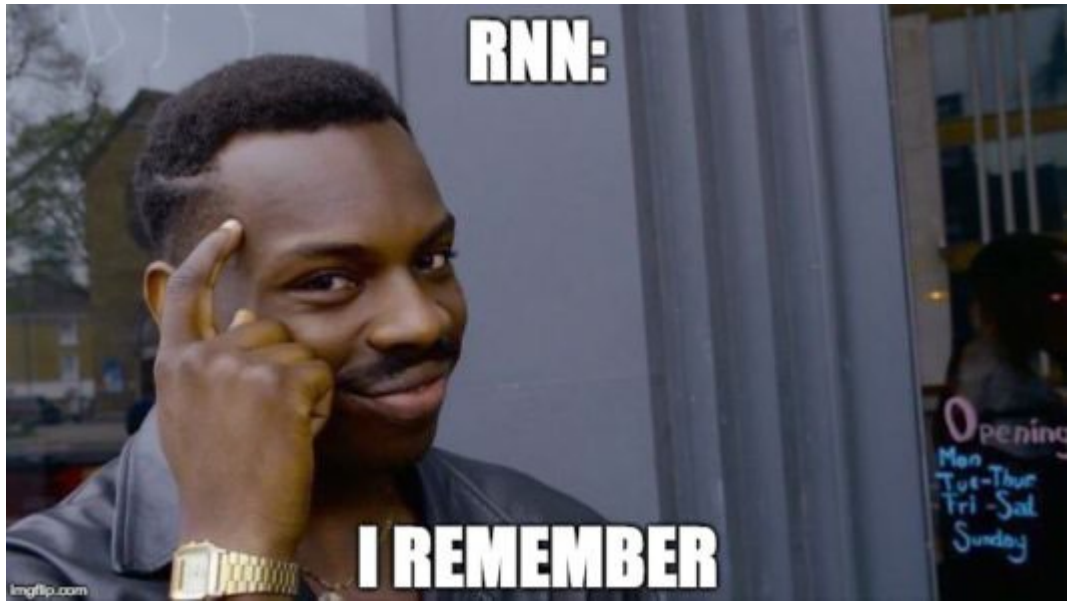

When you don't use LSTM for a long sequence RNN