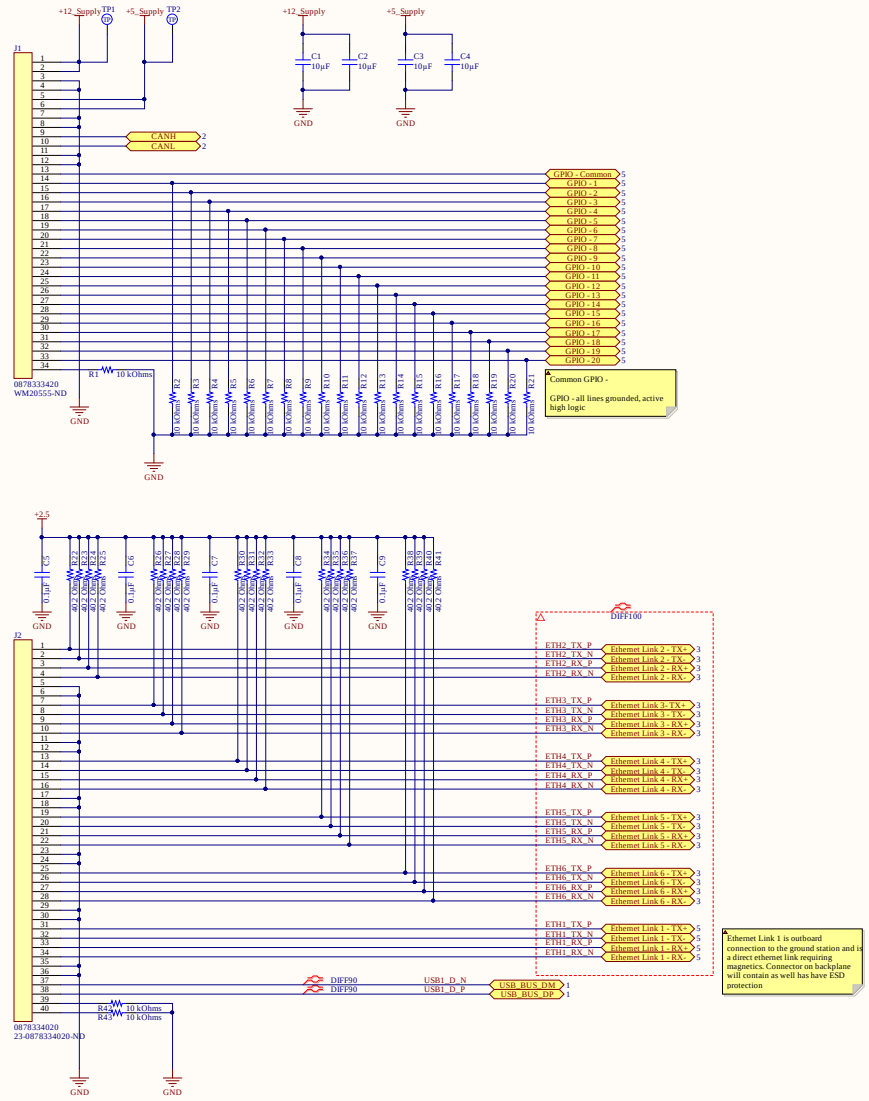

Common GPIO -

GPIO - all lines grounded, active high logic

Ethernet Link 1 is outboard connection to the ground station and is a direct ethernet link requiring magnetics. Connector on backplane will contain as well has have ESD protection

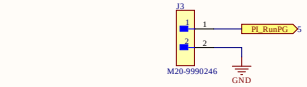

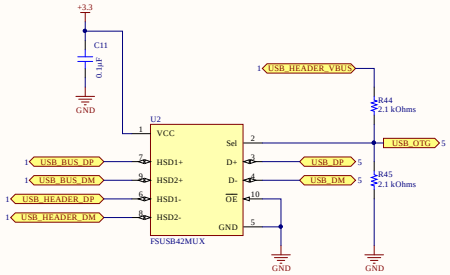

Pi has single USB port by default

Need to configure for both Host and Device, VBUS from USB header port controls selection of port as well as OTG control

Title	*Main Flight Computer Interfaces*		Brickworks Matthew Glazer Design Engineer
Size: A2	Number: *	Revision: 1A	
Date: 5/8/2021	Time: 12:05:43 AM	Sheet 1 of 7	
File: C:\Users\Matthew\Documents\GitHub\Brickworks-Card-Templates\HAB-Main-Flight-Computer-Card-Template\Interfaces.SchDoc			

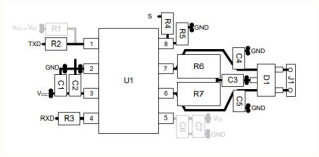

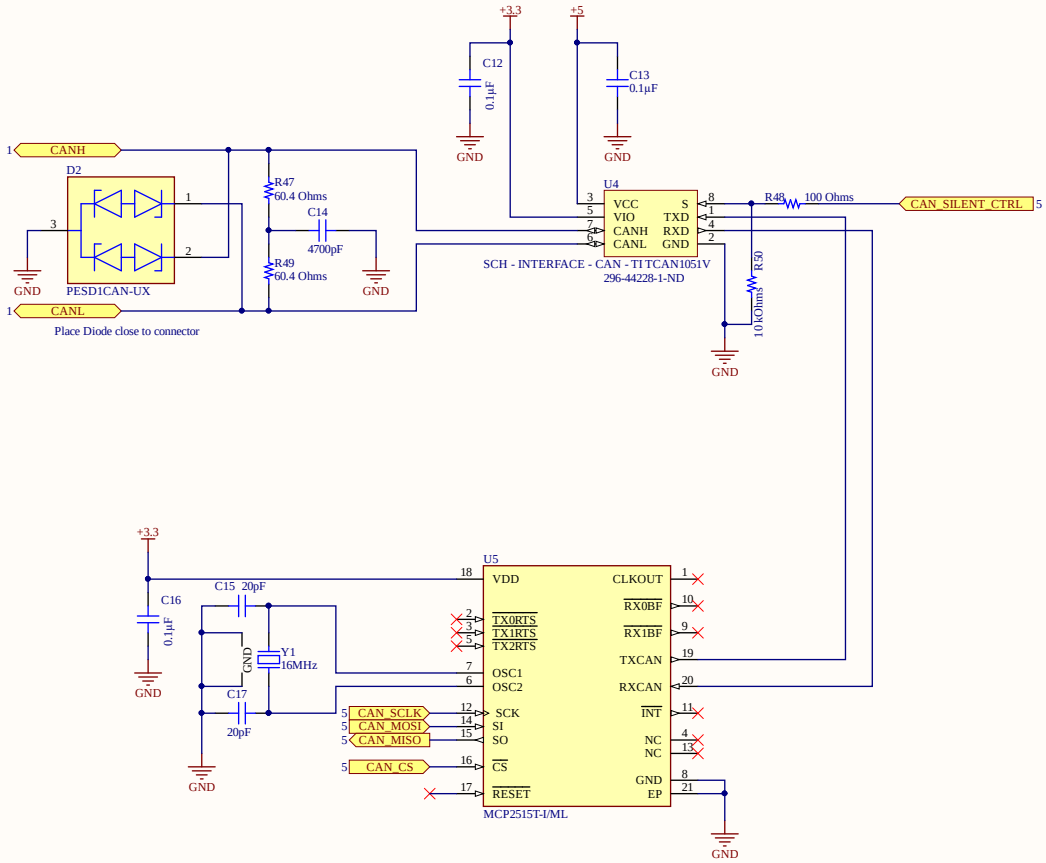

Title	*Main Flight Computer CAN Bus*		*Brickworks* *Matthew Glazer* *Design Engineer* * *
Size: A3	Number: *	Revision: 1A	
Date: 5/8/2021	Time: 12:05:43 AM	Sheet 2 of 7	
File: C:\Users\Matthew\Documents\GitHub\Brickworks-Card-Templates\HAB-Main-Flight-Computer-Card-Template\CANbus.SchDoc			

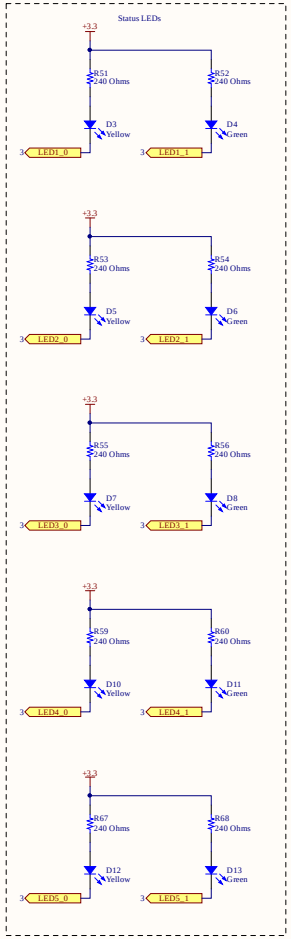

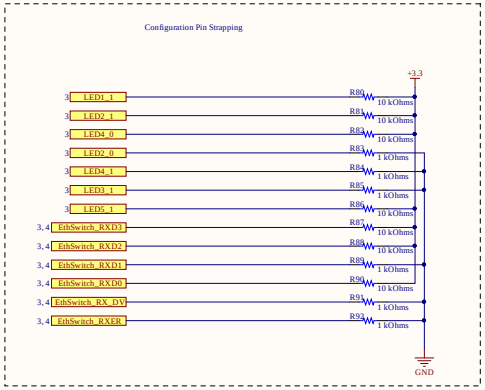

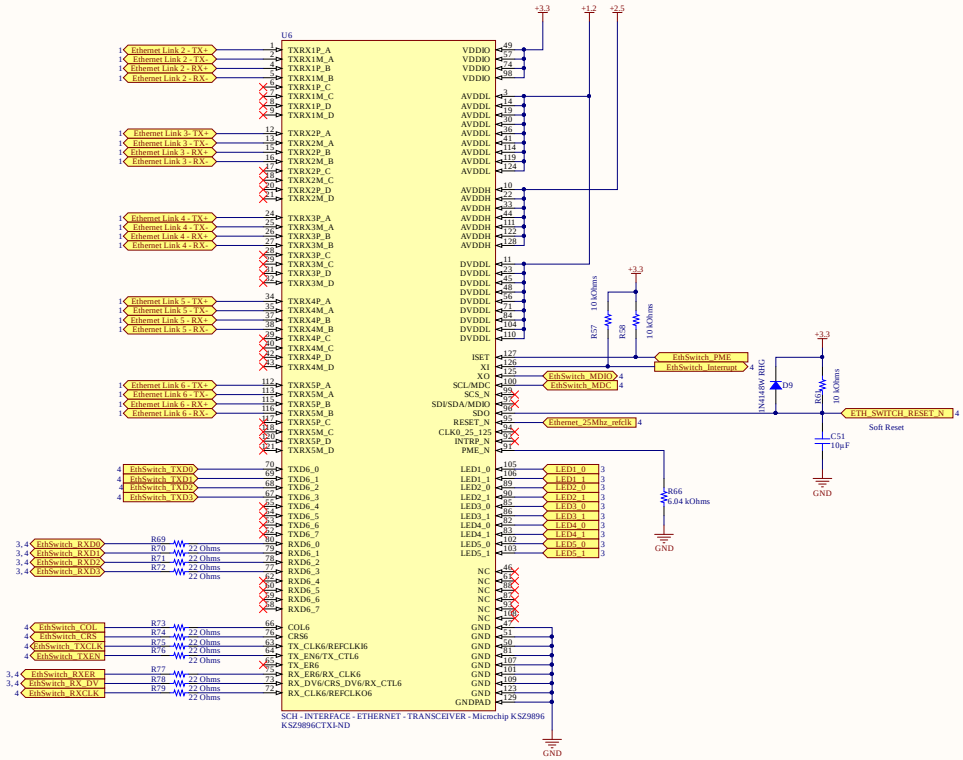

Pin Number	Pin Name	Configuration	Notes
106	LED1_1	Pull Up (b1)	Default. Flow Control enabled
90	LED2_1	Pull Up (b1)	Default. Normal Link Up enabled
82	LED4_0	Pull Up (b1)	[LED4_0,LED2_0]. Autonegotiation disabled
89	LED2_0	Pull Down(b0)	
83	LED4_1	Pull Down(b0)	[LED4_1,LED3_1]. MIIM (MDIO) Interface enabled
86	LED3_1	Pull Down(b0)	
103	LED5_1	Pull Up (b1)	Default. Start Switch enabled
77	RXD6_3	Pull Up (b1)	[RXD6_3,RXD6_2]. MII Interface enabled
78	RXD6_2	Pull Up (b1)	
79	RXD6_1	Pull Down(b0)	Default. MII PHY mode enabled
80	RXD6_0	Pull Up (b1)	100Mpbs mode enabled
73	RX_DV6/CRS_DV6/RX_CTL6	Pull Down(b0)	Default. Disable In-Band Management
75	RX_ER6/RX_CLK6	Pull Down(b0)	Default. 2-Wire Clock Mode

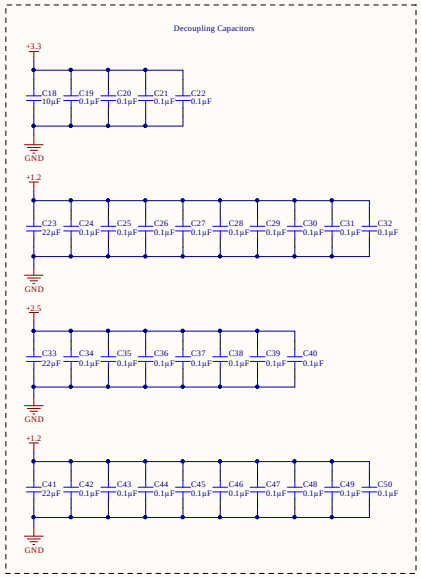

Title	Main Flight Computer Ethernet Switch		Altium Limited Matthew Glazer Design Engineer
Size: A2	Number: *	Revision: 1A	
Date: 5/8/2021	Time: 12:05:43 AM	Sheet 3 of 7	
File: C:\Users\Matthew\Documents\GitHub\Brickworks-Card-Templates\HAB-Main-Flight-Computer-Card-Template\NetworkSwitch			

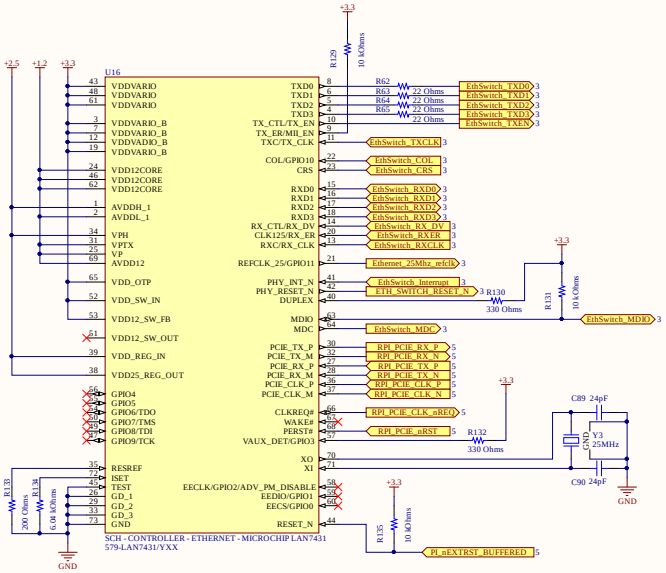

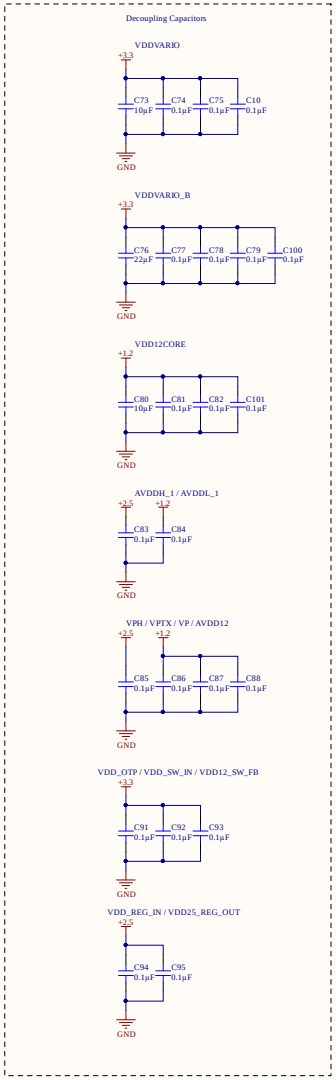

Title	*Main Flight Computer Ethernet Bridge*		Brickworks Matthew Glazer Design Engineer
Size: A2	Number: *	Revision: 1A	
Date: 5/8/2021	Time: 12:05:44 AM	Sheet 4 of 7	
File: C:\Users\Matthew\Documents\GitHub\Brickworks-Card-Templates\HAB-Main-Flight-Computer-Card-Template\EthernetBridge			

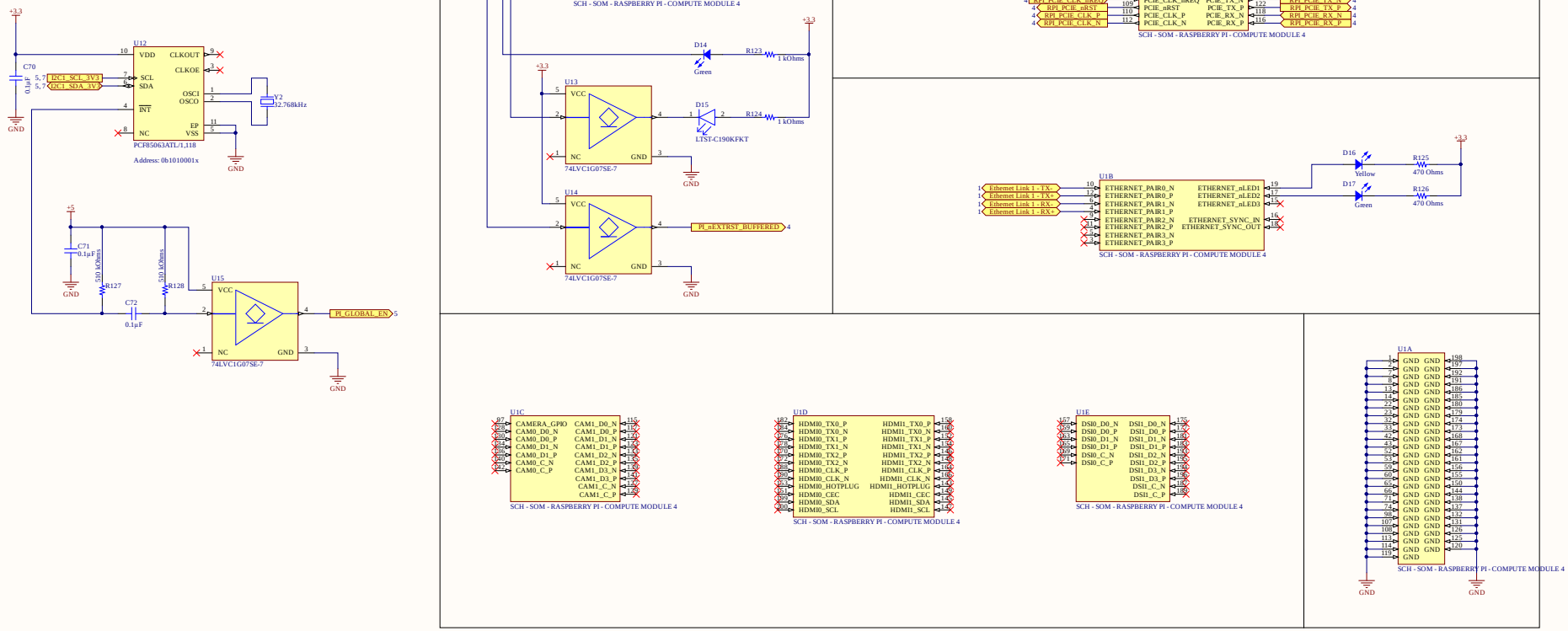

Title	Main Flight Computer Processor		Brickworks Matthew Glazer Design Engineer
Size: A2	Number: *	Revision: 1A	
Date: 5/8/2021	Time: 12:05:44 AM	Sheet 5 of 7	
File: C:\Users\Matthew\Documents\GitHub\Brickworks-Card-Templates\HAB-Main-Flight-Computer-Card-Template\ComputeModu			

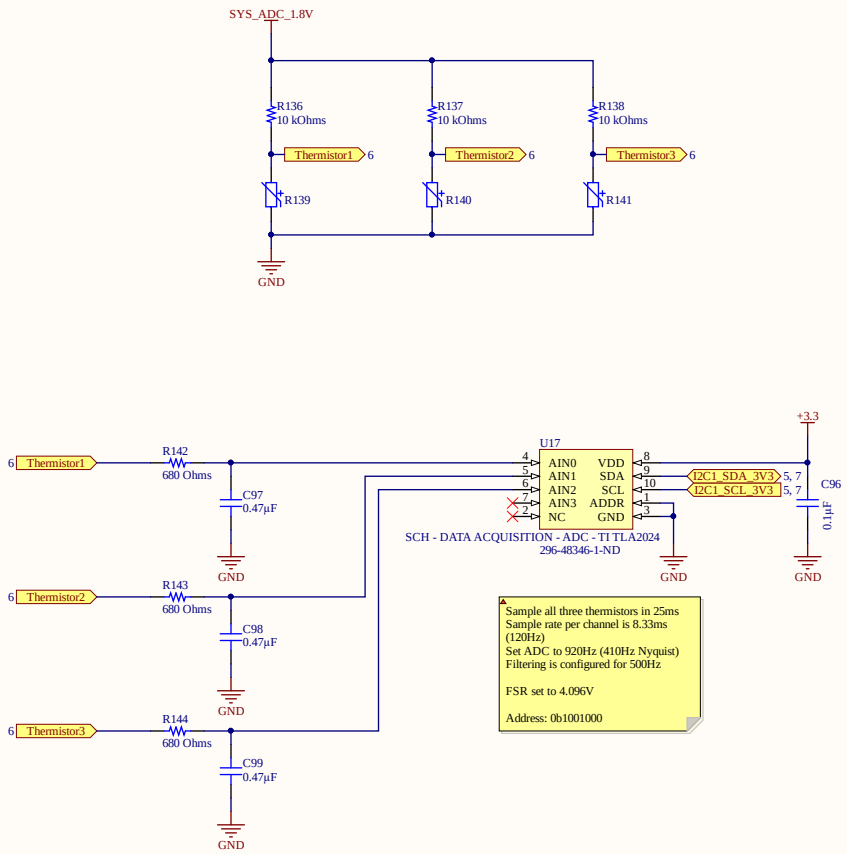

Title	*Main Flight Computer Sensors*		*Brickworks* *Matthew Glazer* *Design Engineer* * *
Size: A3	Number: *	Revision: 1A	
Date: 5/8/2021	Time: 12:05:44 AM	Sheet 6 of 7	
File: C:\Users\Matthew\Documents\GitHub\Brickworks-Card-Templates\HAB-Main-Flight-Computer-Card-Template\Sensors.SchDoc			

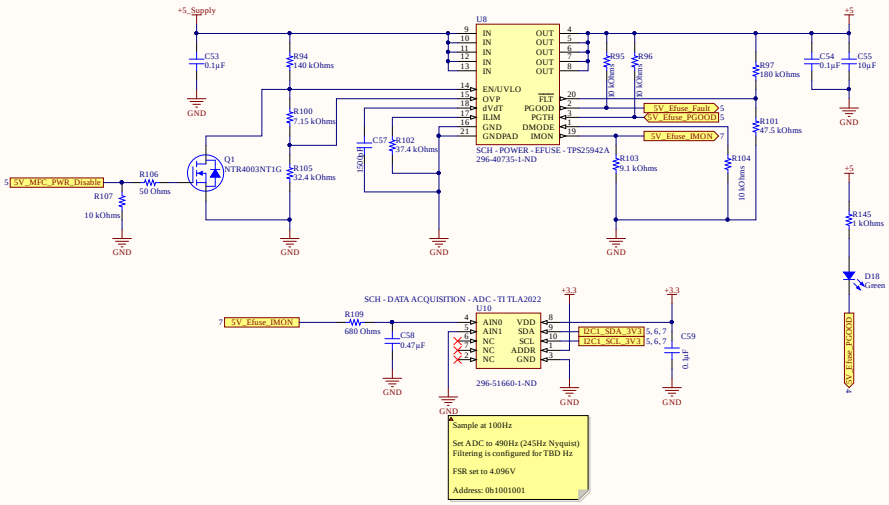

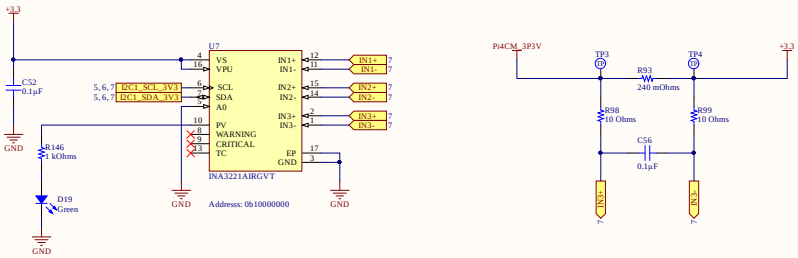

2.5V Regulator

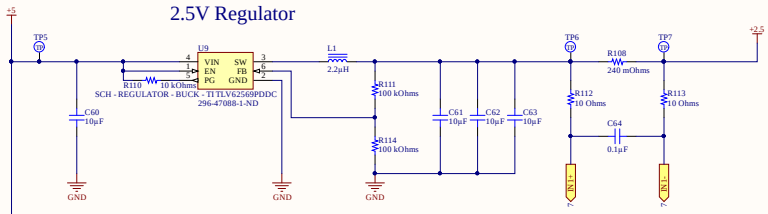

1.2V Regulator

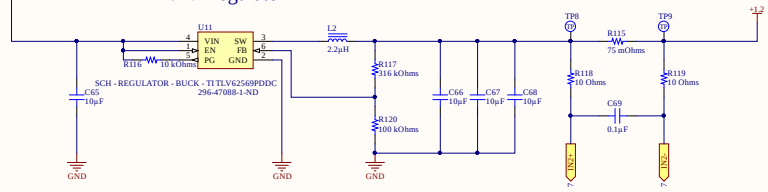

Title	Main Flight Computer Power Supplies		Brickworks Matthew Glazer Design Engineer
Size: A2	Number: *	Revision: 1A	*
Date: 5/8/2021	Time: 12:05:44 AM	Sheet 7 of 7	*
File: C:\Users\Matthew\Documents\GitHub\Brickworks-Card-Templates\HAB-Main-Flight-Computer-Card-Template\Power-Supplies			