Board Description

This merger board seeks to combine the SCALES EPS board with the SCALES IMX8 Carrier Board. Both boards have undergone three revisions, this merger will combine the final revisions of both with each of them undergoing some more modifications based on seperate board reviews. Notable differences for each board compared to their individual counterparts are listed below.

Changes requested by True from Phytec were applied, based on the returned file 'imx8_carrier_v3_dsmith.pdf' recieved on 11/6/2025

Simulations models for the EPS system are available for LTspice. They are located under 'simulation models'.

SCALES_EPS

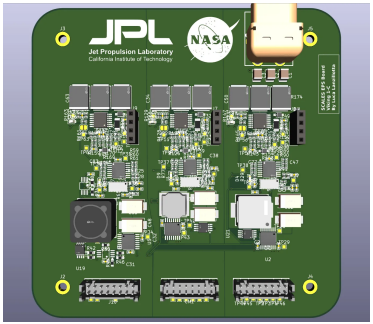

File: SCALES_EPS.kicad_sch

IMX8XQXP SCALES Mariner Carrier Board

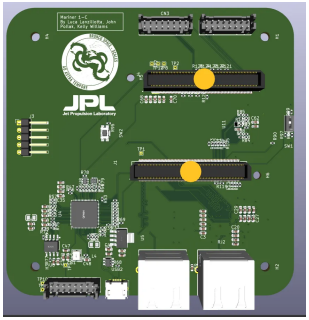

File: imx8qxp_carrier_board.kicad_sch

Block Diagram

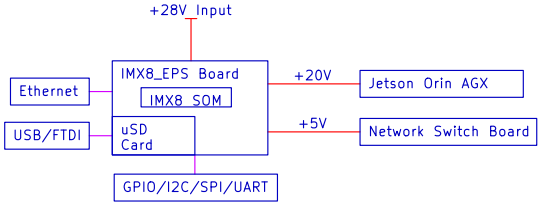

By Luca Lanzillotta & John Pollack
Bronco Space Lab

Sheet: /
File: imx8x_eps_leviathan.kicad_sch

Title: Leviathan V1

Size: A5	Date: 2025-10-29	**Rev: V1**
KiCad E.D.A. 10.0.1		Id: 1/16

EPS WD/Power On Conn. Ops

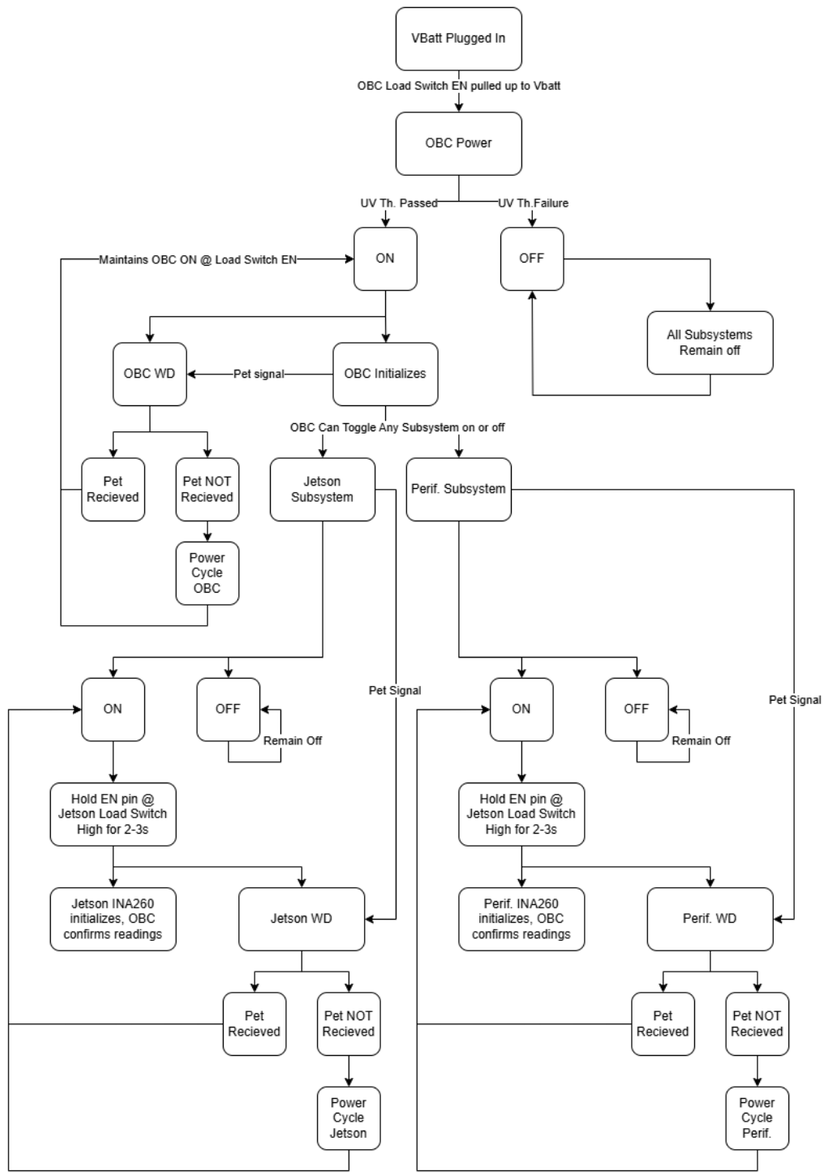

Info

Power requirements per subsystem
OBC: 28v to 3.3v @ 2A
Jetson: 28v to 20v @ 6A
Perif: 28v to 5v @ 2A

Power on sequencing:
OBC powers when Vbatt is supplied. OBC controls operation of the Jetson as well as the Peripheral system via GPIO pins to the respective subsystem load switch.

Startup time for the Jetson on enable is ~500ms
Startup time for the Peripheral on enable is ~200ms
Startup time for the OBC on boot is ~200ms

Vbatt = [24.0, 28.8, 33.6] Due to Li-ion battery charged and discharged states

Signal point ground from power board to rest of system

I2C Addresses Being Used:

INA260 OBC Subsystem: 0x41 (01000001)
INA260 Perif. Subsystem: 0x45 (01000101)
INA260 Jetson Subsystem: 0x40 (01000000)

MCP9808 OBC Subsystem: 0x19 (0001 1001)
MCP9808 Perif. Subsystem: 0x1A (0001 1010)
MCP9808 Jet. Subsystem: 0x1B (0001 1011)

EPS Block Diagram

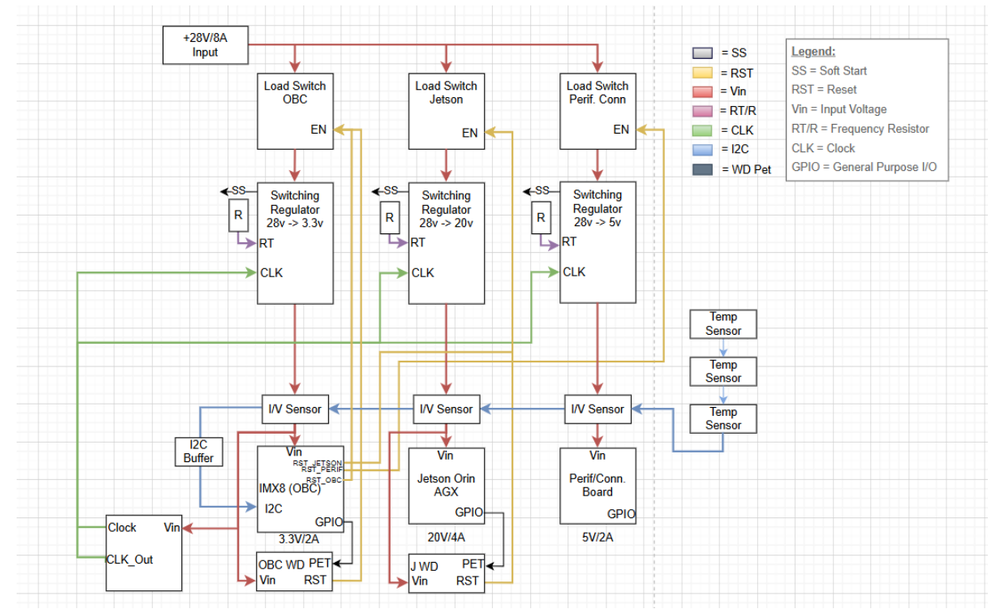

+28V Supply

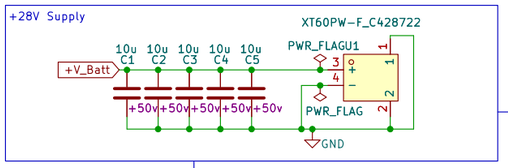

Mounting Holes

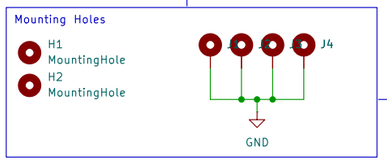

OBC_Subsystem

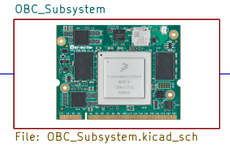

File: OBC_Subsystem.kicad_sch

Jetson_Subsystem

File: JetsonSubsystem.kicad_sch

Perif_Subsystem

File: Perif_Subsystem.kicad_sch

Temperature Sensors

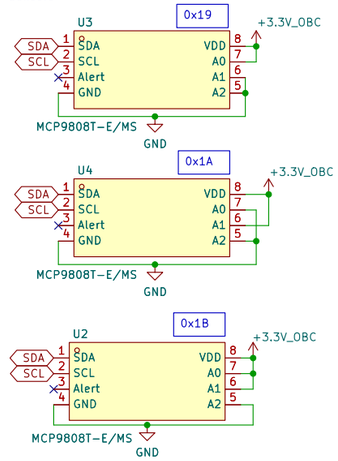

By Luca Lanzillotta & John Pollack
Bronco Space Lab

Sheet: /SCALES_EPS/
File: SCALES_EPS.kicad_sch

Title: Leviathan V1

Size: A3	Date: 2025-10-29	**Rev: V1**
KiCad E.D.A. 10.0.1		Id: 2/16

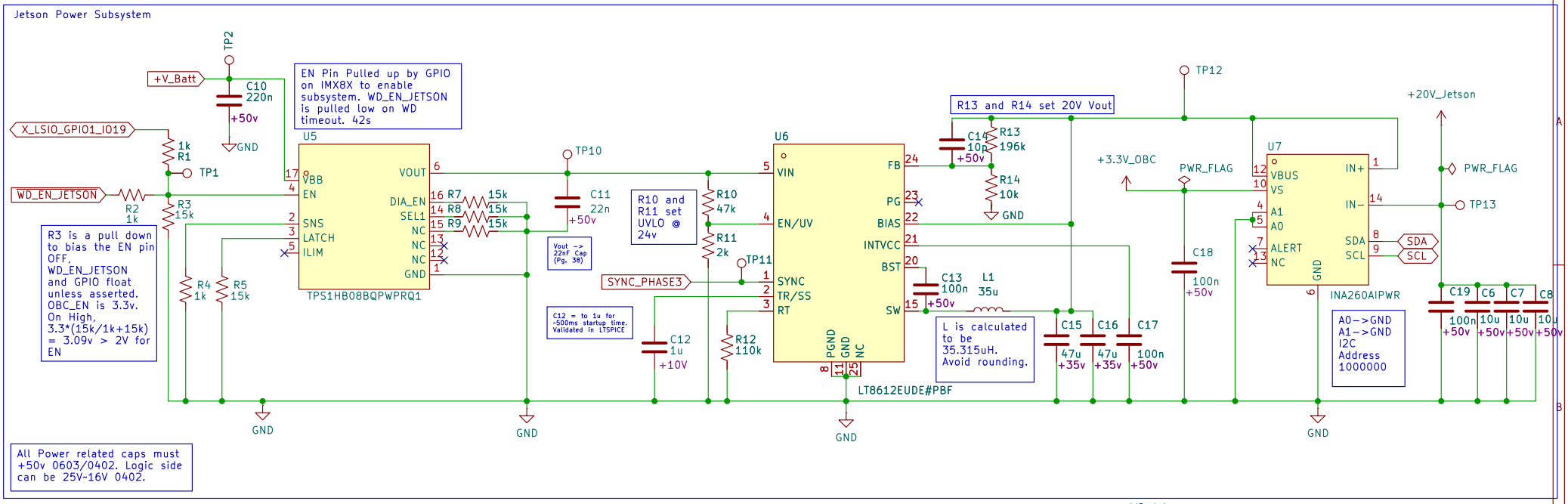

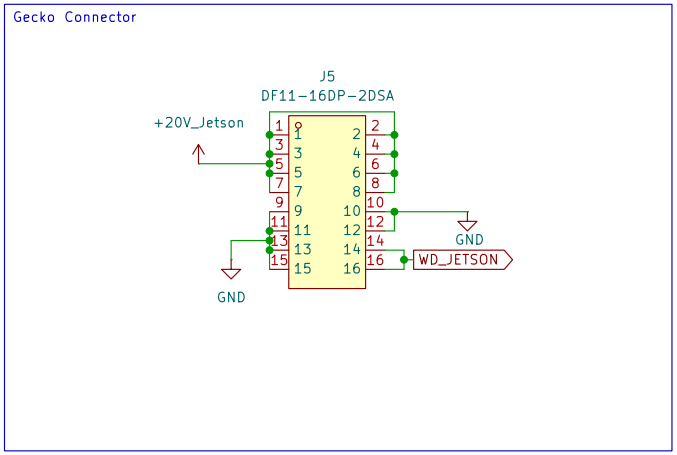

To configure: (Pg.8)
SYNC (Tied to Clock Phase 2)
RT (Set default frequency to 400khz
EN/UV threshold (~24v = UV, due to Li-ion discharge
PGND (Tie to GND) DONE
SW (Tie to inductor and setup the boost capacitor)
BST (add 0.1uF bypass cap)
INTVCC (add 0.1uF bypass cap)
BIAS (If Vout is greater than 3.3v tie to vout)
FB (Set Vout via R1 and R2 using FB Setup Pg.12)
TR/SS (Select a soft start time) ~500ms 1uF
NC (Tie to ground)

WD_Jetson

File: WD_Jetson.kicad_sch

By Luca Lanzillotta & John Pollack
Bronco Space Lab

Sheet: /SCALES_EPS/Jetson_Subsystem/
File: JetsonSubsystem.kicad_sch

Title: Leviathan V1

Size: A4	Date: 2025-10-29	**Rev: V1**
KiCad E.D.A. 10.0.1		Id: 4/16

External Watch-Dog Timer

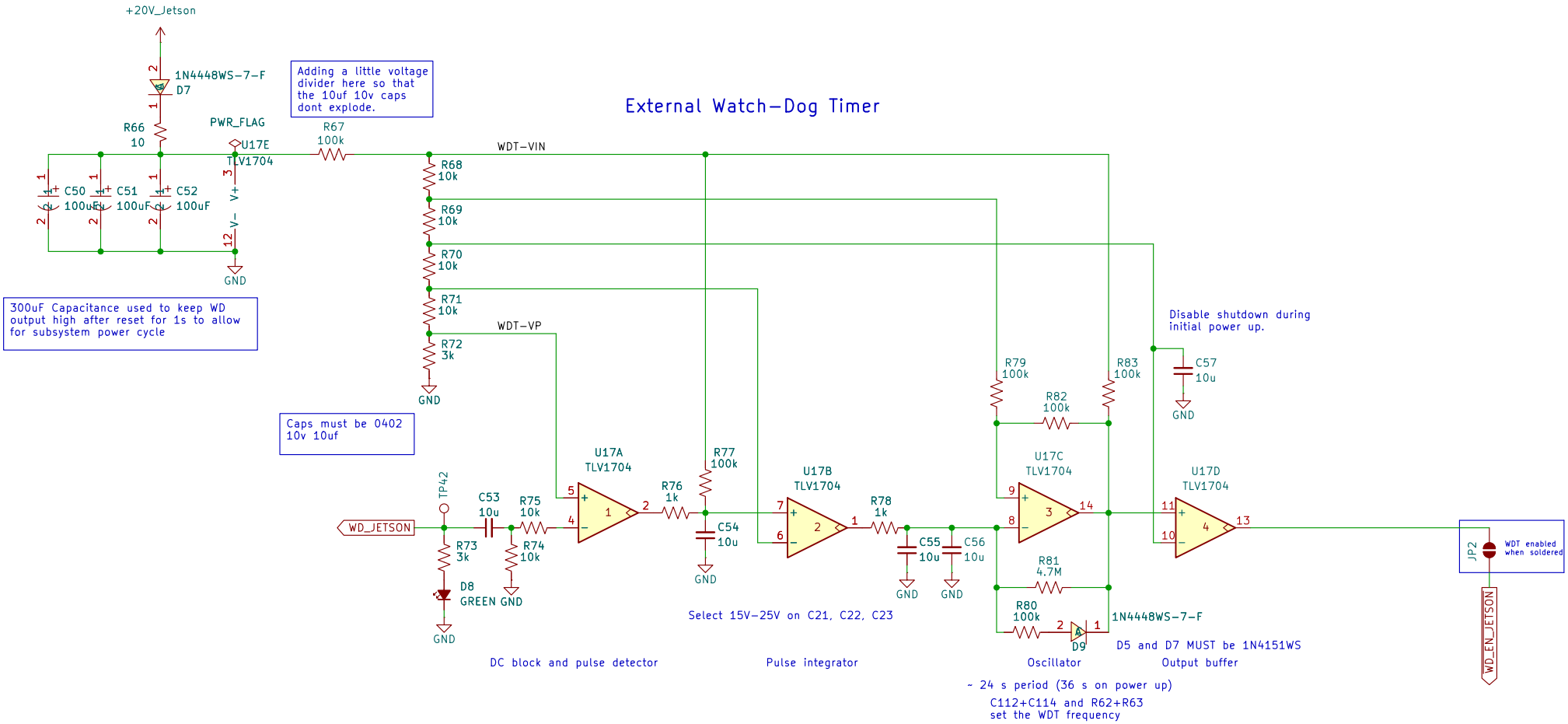

By Luca Lanzillotta & John Pollack

Bronco Space Lab

Sheet: /SCALES_EPS/Jetson_Subsystem/WD_Jetson/

File: WD_Jetson.kicad_sch

Title: Leviathan V1

Size: A4	Date: 2025-10-29	**Rev: V1**
KiCad E.D.A. 10.0.1		Id: 8/16

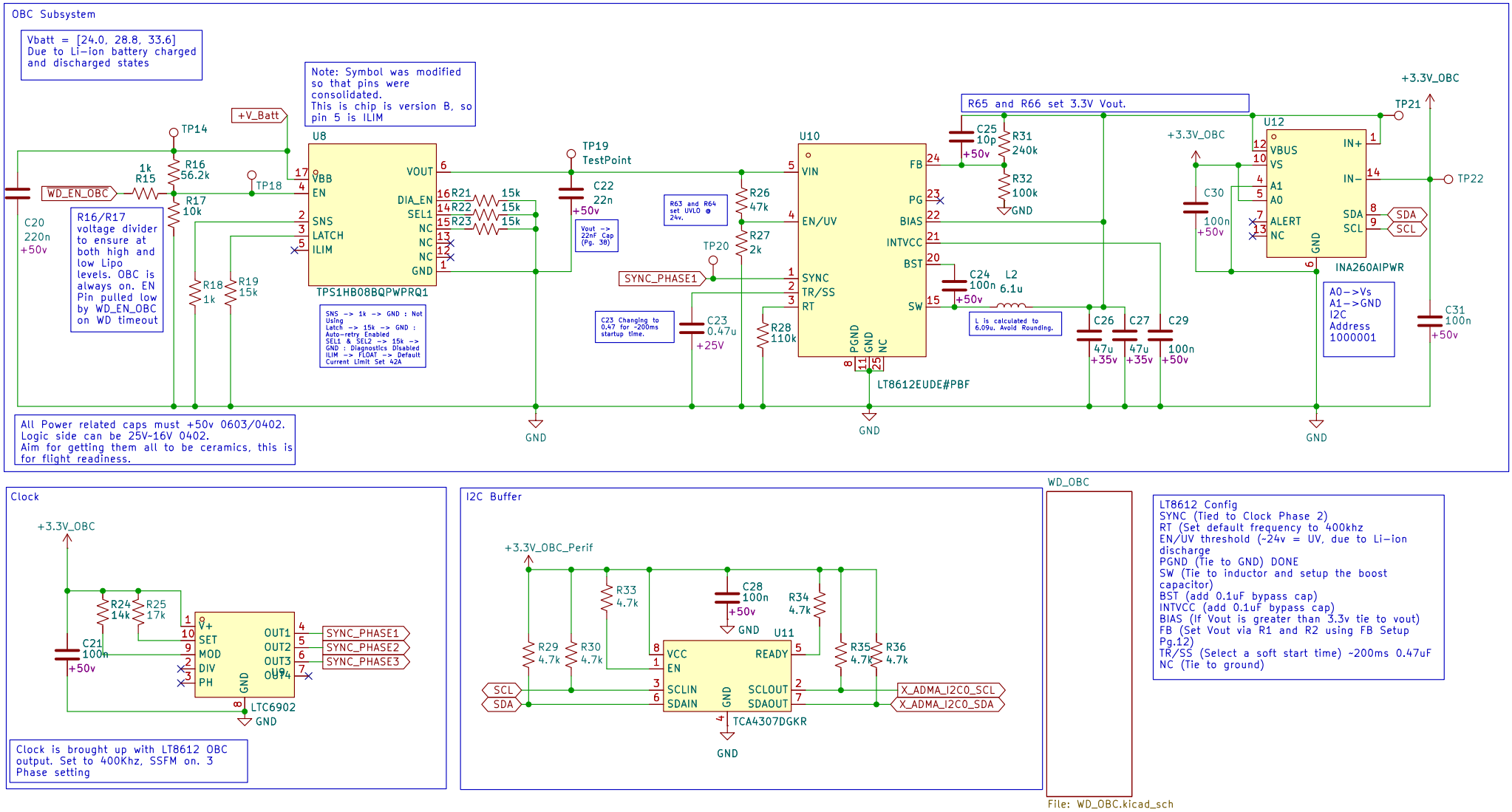

WD_OBC

File: WD_OBC.kicad_sch

LT8612 Config
SYNC (Tied to Clock Phase 2)
RT (Set default frequency to 400khz
EN/UV threshold (~24v = UV, due to Li-ion discharge
PGND (Tie to GND) DONE
SW (Tie to inductor and setup the boost capacitor)
BST (add 0.1uF bypass cap)
INTVCC (add 0.1uF bypass cap)
BIAS (If Vout is greater than 3.3v tie to vout)
FB (Set Vout via R1 and R2 using FB Setup Pg.12)
TR/SS (Select a soft start time) ~200ms 0.47uF
NC (Tie to ground)

By Luca Lanzillotta & John Pollack
Bronco Space Lab

Sheet: /SCALES_EPS/OBC_Subsystem/
File: OBC_Subsystem.kicad_sch

Title: Leviathan V1

Size: A4	Date: 2025-10-29	**Rev: V1**
KiCad E.D.A. 10.0.1		Id: 5/16

External Watch-Dog Timer

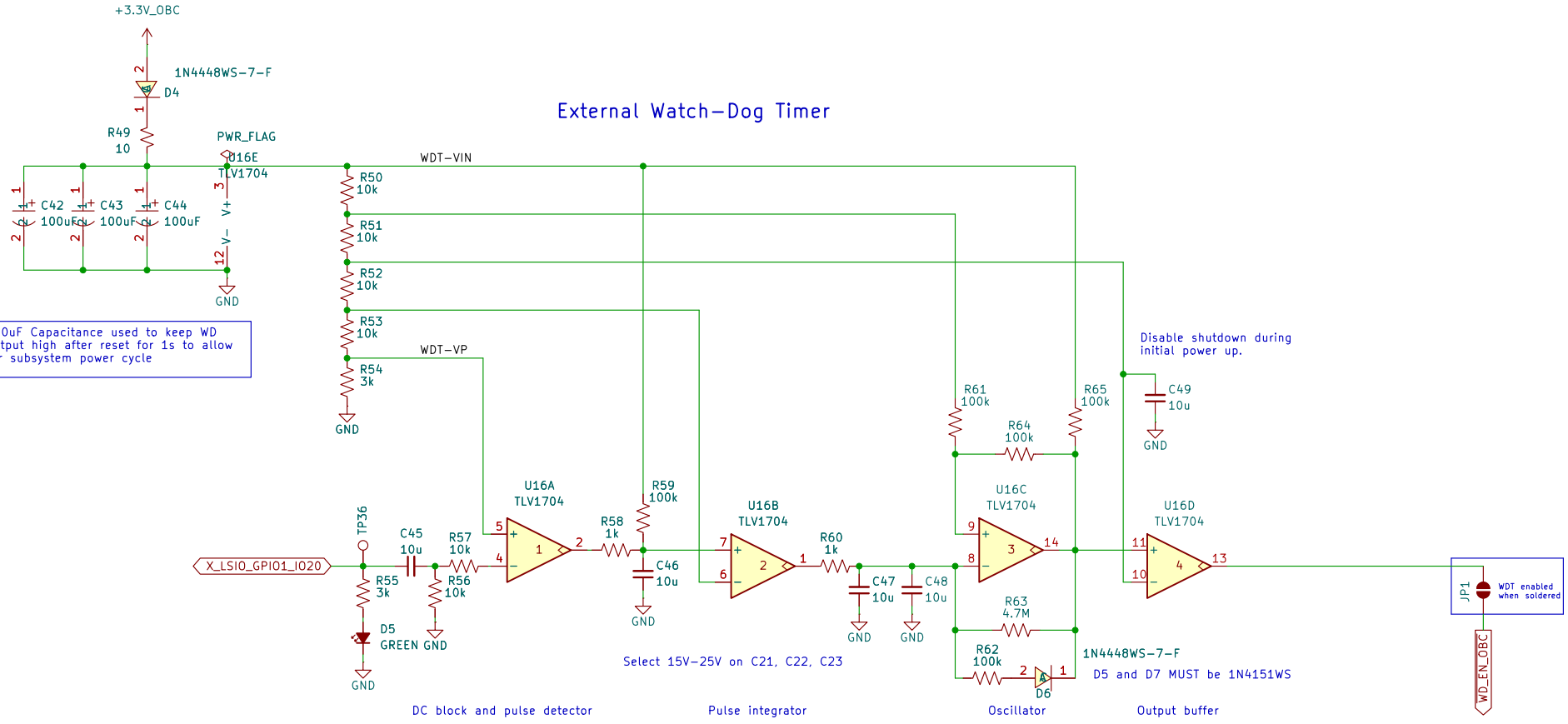

By Luca Lanzillotta & John Pollack

Bronco Space Lab

Sheet: /SCALES_EPS/OBC_Subsystem/WD_OBC/

File: WD_OBC.kicad_sch

Title: Leviathan V1

Size: A4	Date: 2025-10-29	**Rev: V1**
KiCad E.D.A. 10.0.1		Id: 7/16

Peripheral Subsystem

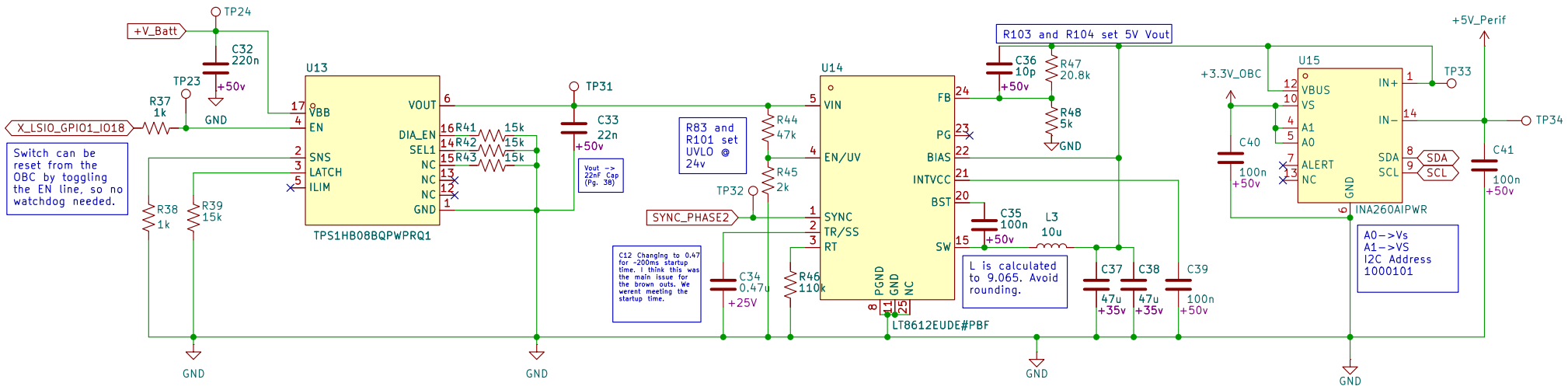

All Power related caps must +50v 0603/0402. Logic side can be 25V-16V 0402.

Gecko Connector

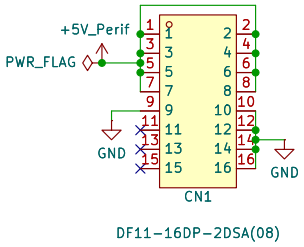

LT8612 Config
SYNC (Tied to Clock Phase 2)
RT (Set default frequency to 400khz
EN/UV threshold (~24v = UV, due to Li-ion discharge
PGND (Tie to GND) DONE
SW (Tie to inductor and setup the boost capacitor)
BST (add 0.1uF bypass cap)
INTVCC (add 0.1uF bypass cap)
BIAS (If Vout is greater than 3.3v tie to vout)
FB (Set Vout via R1 and R2 using FB Setup Pg.12)
TR/SS (Select a soft start time) ~200ms 0.47uF
NC (Tie to ground)

By Luca Lanzillotta & John Pollack
Bronco Space Lab

Sheet: /SCALES_EPS/Perif_Subsystem/
File: Perif_Subsystem.kicad_sch

Title: Leviathan V1

Size: A4	Date: 2025-10-29	Rev: V1
KiCad E.D.A. 10.0.1		Id: 6/16

IMX8 SCALES Merger Board

Variant: Pre-Flight Testing Board

The IMX8 Scales Merger Board is a minimized version of the IMX8 Dev board combined with the SCALES EPS Board

Board Description:
Provided serial communications for end user: FTDI, UART, SPI, I2C
Power Input: From SCALES EPS Rev F (Hirose DF11 2x8 Connector)
Ethernet: 2, 10/100 Base-T RJ-45 Connectors
SPI/GPIO/I2C: Provided via Hirose DF11 2x8 Connector
SOM Connector: 2x140 proprietary Samtec Connector for IMX8QXP SOM

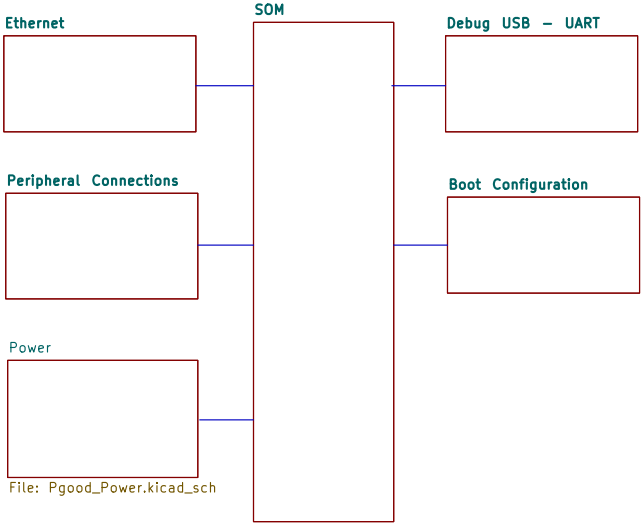

By Luca Lanzillotta & John Pollack
Bronco Space Lab

Sheet: /IMX8XQXP SCALES Mariner Carrier Board/
File: imx8qxp_carrier_board.kicad_sch

Title: Leviathan V1

Size: A5	Date: 2025-10-29	**Rev: V1**
KiCad E.D.A. 10.0.1		Id: 3/16

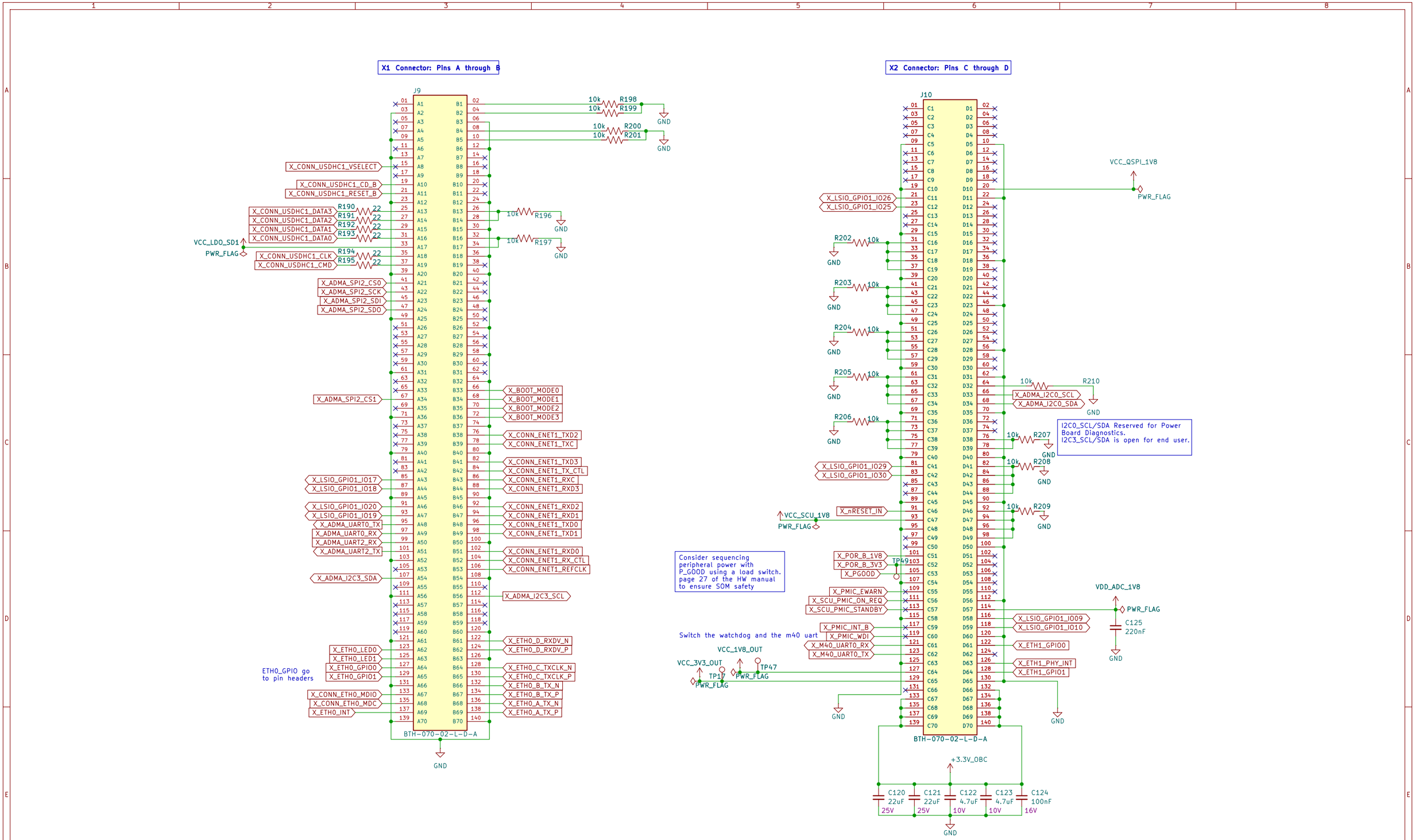

By Luca Lanzillotta & John Pollack

Bronco Space Lab

Sheet: /IMX8XQXP SCALES Mariner Carrier Board/SOM/

File: SOM.kicad_sch

Title: Leviathan V1

Size: A3	Date: 2025-10-29	**Rev: V1**
KiCad E.D.A. 10.0.1		Id: 9/16

Description:
The SDCard/Wifi Mux(s) have been removed to allow for Default SDCard boot configuration and Utilization. If it is desired to use eMMC, then there must be a switch to toggle between boot modes, this is BOOTMODE[3:0] bits 0010 to eMMCand 0011 to SDcard respectively. Due to removal of all other boot configurations, we only need to switch the last bit using the provided switch we will include.

SD Card Power Enable Switch

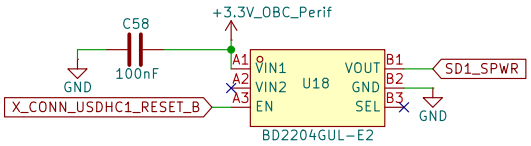

Bootmode Toggler

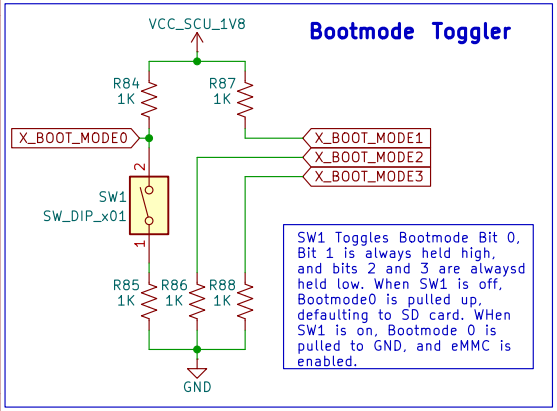

SW1 Toggles Bootmode Bit 0, Bit 1 is always held high, and bits 2 and 3 are alwaysd held low. When SW1 is off, Bootmode0 is pulled up, defaulting to SD card. WHen SW1 is on, Bootmode 0 is pulled to GND, and eMMC is enabled.

uSD Card Connector

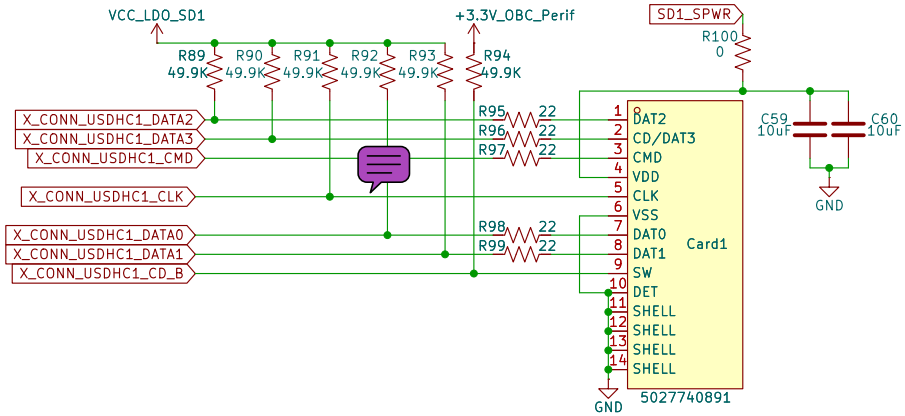

By Luca Lanzillotta & John Pollack

Bronco Space Lab

Sheet: /IMX8XQXP SCALES Mariner Carrier Board/Boot Configuration/

File: bootConfig.kicad_sch

Title: Leviathan V1

Size: A4	Date: 2025-10-29	**Rev: V1**
KiCad E.D.A. 10.0.1		Id: 10/16

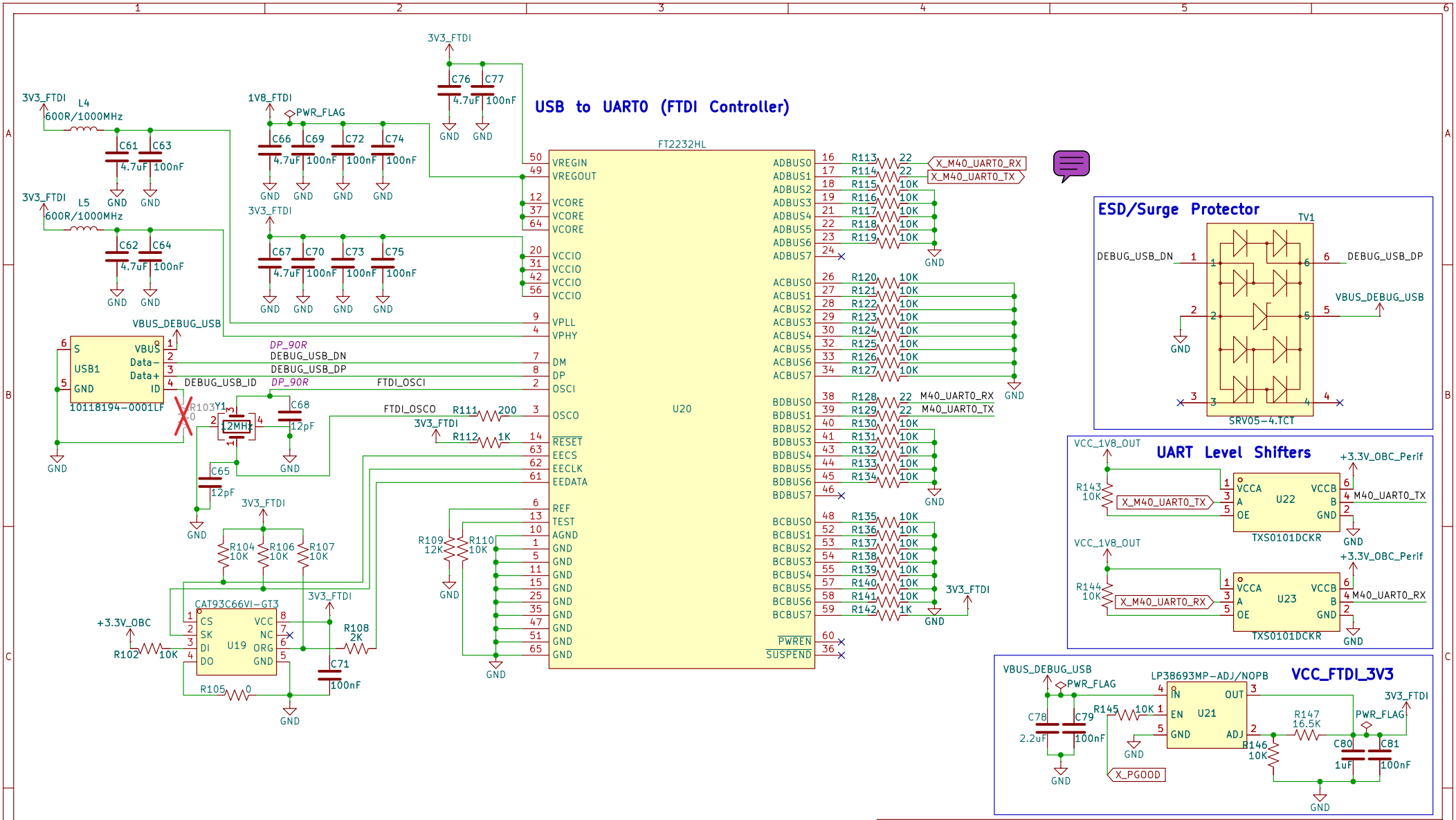

Description:
UART0 on the SOM is reserved for UART-FTDI usage. The default BSP configures the SOM to use UART0 for debugging, this allows the user to be able to use UART to send and recieve commands and telemetry with the SOM. The chip below facilitates UART to FTDI translation so that the end user can utilize a serial port on a seperate machine to interface directly. This design and chip are provided by Phytec.

By Luca Lanzillotta & John Pollack
Bronco Space Lab

Sheet: /IMX8XQXP SCALES Mariner Carrier Board/Debug USB - UART/
File: debug.kicad_sch

Title: Leviathan V1

Size: A4	Date: 2025-10-29	Rev: V1
KiCad E.D.A. 10.0.1		Id: 11/16

10/100/1000 Ethernet

Description: Ethernet configuration and bootstrap modes are configured on the SOM.
This is all ported from the IMX8X dev board. There are two available Ethernet configurations for the SOM, one is preconfigured on the SOM with an onboard RGMII translator, and the second one is included in this carrier board.

Anything going to the SOM is single ended. 50ohm. Impedance Controlled.

U25
DP83867CRRGZR

MDIO, MDC, TX_D3, TX_D2, TX_D1, TX_D0, TX_CTRL, GTX_CLK, RX_D0, RX_D1, RX_D2, RX_D3, RX_CTRL, RX_CLK, INT/PWDN, JTAG_TDI, JTAG_TMS, JTAG_TDO, JTAG_CLK, X_I, X_O, RESET_N, RBIAS, TD_P_A, TD_M_A, TD_P_B, TD_M_B, TD_P_C, TD_M_C, TD_P_D, TD_M_D, LED_0, LED_1, LED_2, GPIO_0, GPIO_1, CLK_OUT, VDDA1P8, VDDA2P5, VDD1P0, VDDIO, GND

X_CONN_ETH0_MDIO, X_CONN_ETH0_MDC, X_CONN_ENET1_TXD3, X_CONN_ENET1_TXD2, X_CONN_ENET1_TXD1, X_CONN_ENET1_TXD0, X_CONN_ENET1_TX_CTL, X_CONN_ENET1_TXC, X_CONN_ENET1_RXD0, X_CONN_ENET1_RXD1, X_CONN_ENET1_RXD2, X_CONN_ENET1_RXD3, X_CONN_ENET1_RX_CTL, X_CONN_ENET1_RXC, X_ETH1_PHY_INT, ETH1_PHY_XI, ETH1_PHY_XO, X_POR_B_1V8, ETH1_A_TX_P, ETH1_A_TX_N, ETH1_B_TX_P, ETH1_B_TX_N, ETH1_C_TXCLK_P, ETH1_C_TXCLK_N, ETH1_D_RXDV_P, ETH1_D_RXDV_N, LED0_LINK, LED2_ACT, X_ETH1_GPIO0, X_ETH1_GPIO1, X_CONN_ENET1_REFCLK

R169 22, R170 22, R171 22, R172 22, R173 22, R174 0, R167 2K, R168 1M, R175 100, R189 15K, R176 1K, R177 10K, C88 18pF 50V, C89 18pF 50V, Y3 25MHz

+1.8V_OBC_Perif Dependent on Pgood

ETH1 RX Pull-up

+1.8V_OBC_Perif

Output from 3v3 som to 1v8 switching regulator

R179 10K, R181 2.49K, R180 2.49K, R182 2.49K

X_CONN_ENET1_RXD2, X_CONN_ENET1_RXD0

PHY address = 3

GND

ETH1 GPIO/RX Pull-up

+1.8V_OBC_Perif

GPIO_0 MODE 3 + GPIO_1 MODE 0
(1.5 ns RX Clock to Data Skew)

Output from 3v3 som to 1v8 switching regulator

R183 5.76K, R184 2.49K, X_ETH1_GPIO0

R186 5.76K, R187 2.49K, X_CONN_ENET1_RX_CTL

MODE 3= Autoneg. enable

GND

Q1 IRLML6401, R185 10K, Q2 BSS138, R188 10K, PWR_FLAG

VCC_ENET_2V5

C113 1uF 10V, C114 100nF 16V, C116 1uF 10V, C117 100nF 16V, C118 10nF 50V, C119 10uF 16V

C91 1uF 10V, C94 100nF 16V, C97 1uF 10V, C100 100nF 16V, C103 10nF 50V, C106 10uF 16V

VDD_ETH_1V0

C90 1uF 10V, C93 100nF 16V, C96 1uF 10V, C99 100nF 16V, C102 1uF 10V, C105 100nF 16V, C107 1uF 10V, C109 100nF 16V, C112 10nF 50V, C115 10uF 16V

These Bulk Capacitors Need Not Be Directly Next to the Pins

C92 100nF 16V, C95 1uF 10V, C98 100nF 16V, C101 1uF 10V, C104 100nF 16V, C108 1uF 10V, C110 10nF 50V, C111 10uF 16V

3v3 dependent on Pgood. From Load switch

VDD_ETH_2V5_SUPPLY

+3.3V_OBC_Perif

C82 100nF, C83 100nF, R148 10K, U26 MCP1824T-ADJE/OT, R155 2.55k, R157 13K, C86 100nF, VCC_ENET_2V5

Output from 3v3 som to 1v8 switching regulator

VDD_ETH_1V0_SUPPLY

+1.8V_OBC_Perif, VDD_ETH_1V0, PWR_FLAG, C84 100nF, R151 10K, U27 TLV71310PDQNR, C85 100nF

Ethernet Ports

Ethernet 0, Ethernet 1, C87 10nF, PWR_FLAG, GNDPWR

Trigger Buffer

+1.8V_OBC_Perif

R149 10K, R152 5.76K, R150 2.49K, R153 2.49K, U28 74LVC2G07GW, LED0_LINK, LED2_ACT, ETH1_LED0, ETH1_LED2

By Luca Lanzillotta & John Pollack
Bronco Space Lab
Sheet: /IMX8XQXP SCALES Mariner Carrier Board/Ethernet/
File: ethernet.kicad_sch

Title: Leviathan V1

Size: A4	Date: 2025-10-29	Rev: V1
KiCad E.D.A. 10.0.1		Id: 12/16

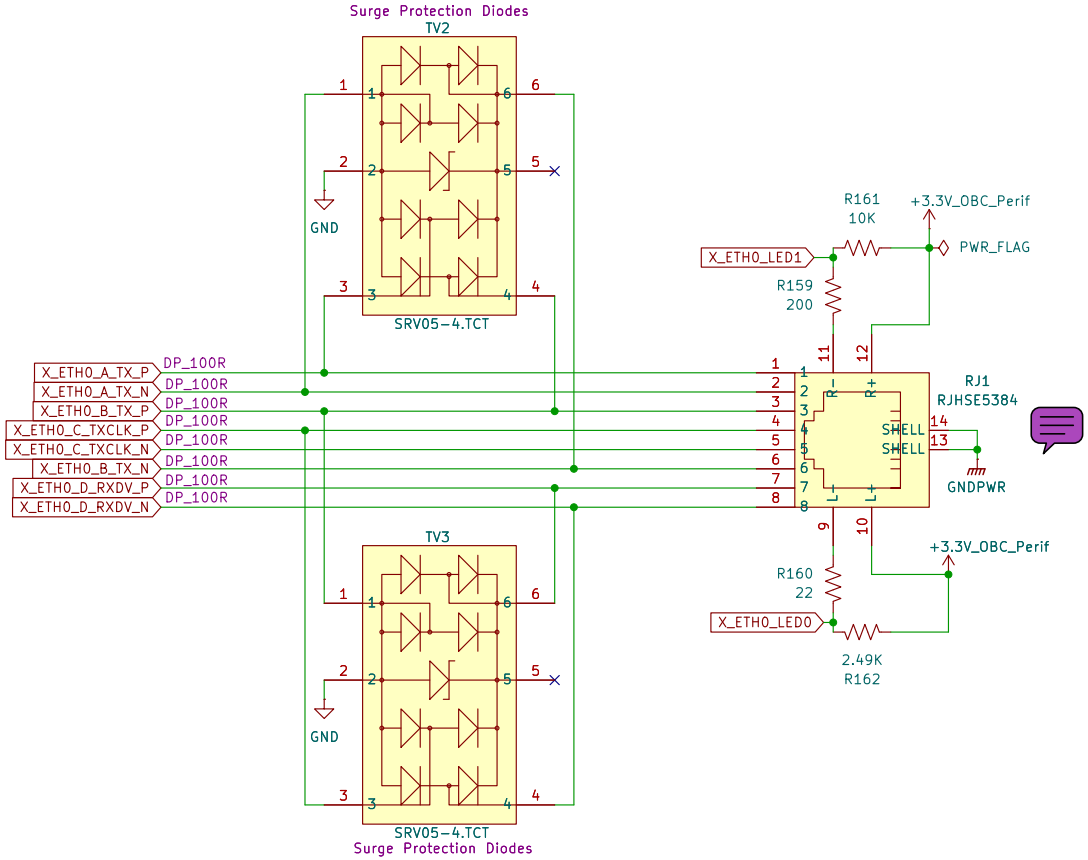

By Luca Lanzillotta & John Pollack

Bronco Space Lab

Sheet: /IMX8XQXP SCALES Mariner Carrier Board/Ethernet/Ethernet 0/

File: ethernet0.kicad_sch

Title: Leviathan V1

Size: A4	Date: 2025-10-29	**Rev: V1**
KiCad E.D.A. 10.0.1		Id: 14/16

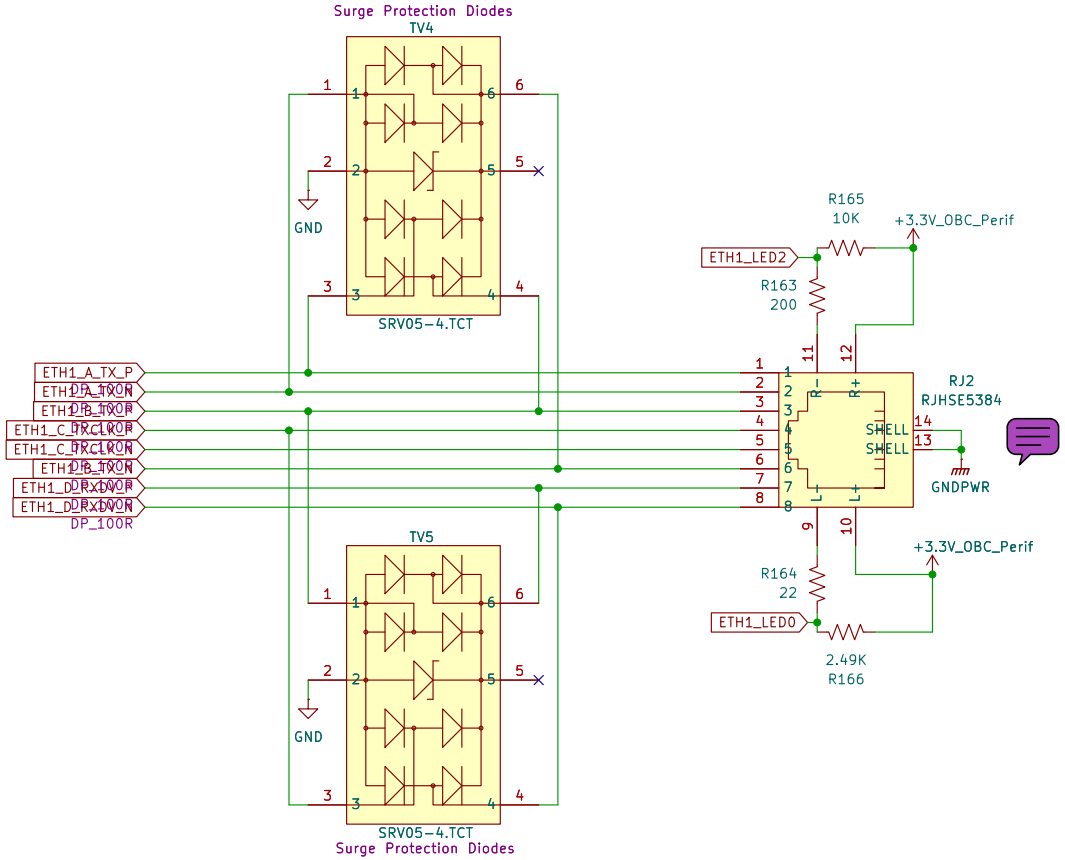

By Luca Lanzillotta & John Pollack

Bronco Space Lab

Sheet: /IMX8XQXP SCALES Mariner Carrier Board/Ethernet/Ethernet 1/

File: ethernet1.kicad_sch

Title: Leviathan V1

Size: A4	Date: 2025-10-29	**Rev: V1**
KiCad E.D.A. 10.0.1		Id: 15/16

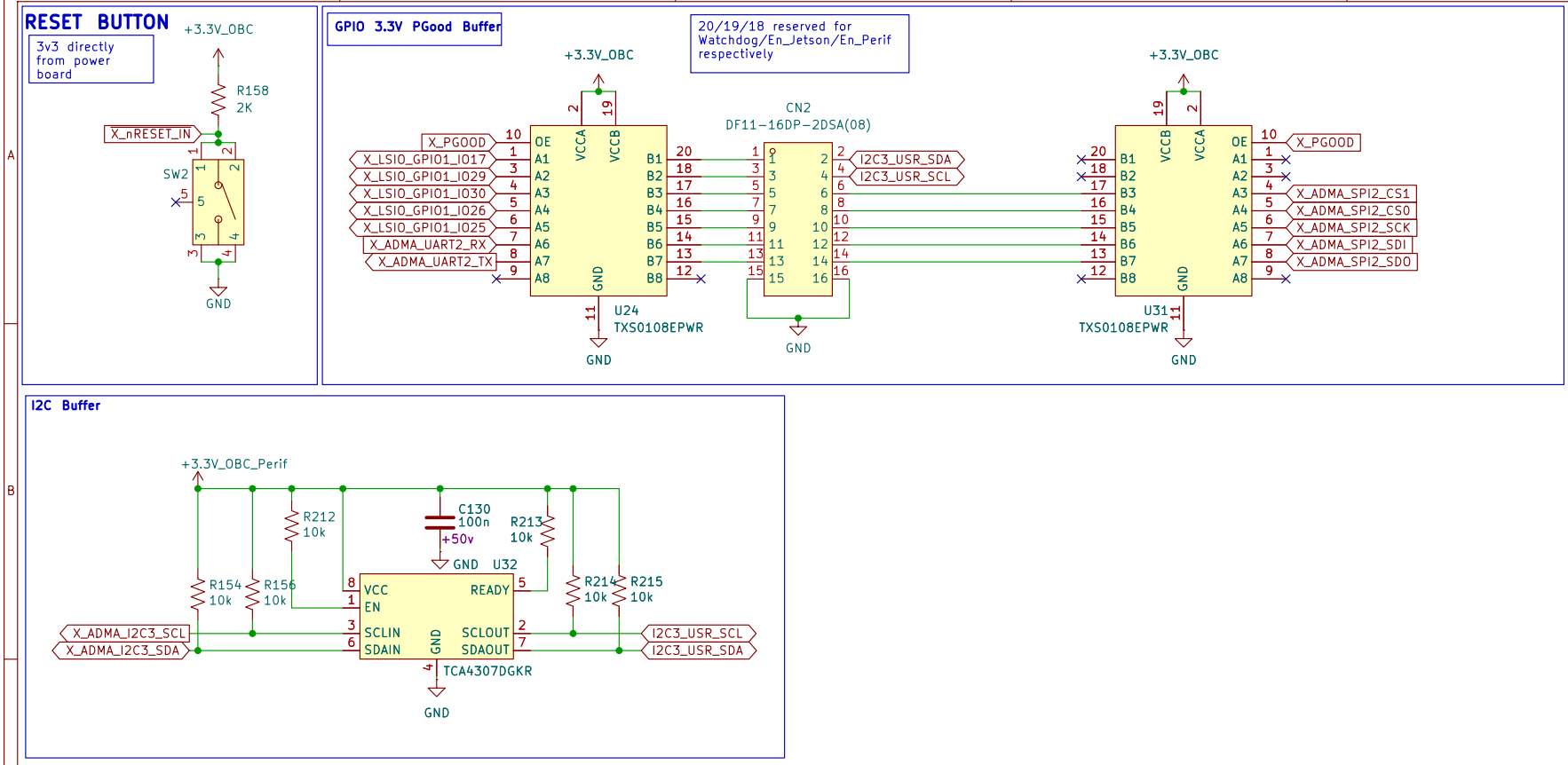

By Luca Lanzillotta & John Pollack

Bronco Space Lab

Sheet: /IMX8XQXP SCALES Mariner Carrier Board/Peripheral Connections/

File: periphCon.kicad_sch

Title: Leviathan V1

Size: A4	Date: 2025-10-29	**Rev: V1**
KiCad E.D.A. 10.0.1		Id: 13/16

3V3_OBC to VCC_3V3 Load Switch

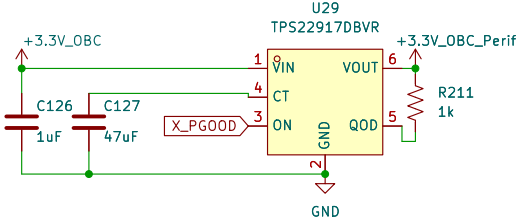

Using PGood to power sequence 3V3 Dependent peripheral devices on the carrier board.

3V3_OBC to VCC_1V8 Switching Regulator

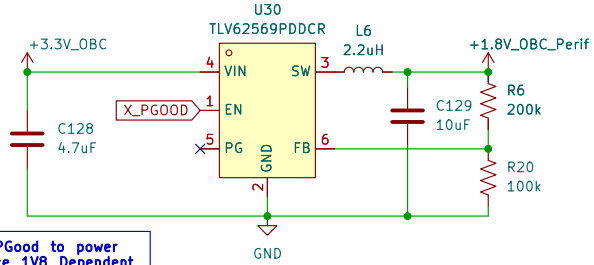

Using PGood to power sequence 1V8 Dependent peripheral devices on the carrier board.

By Luca Lanzillotta & John Pollack

Bronco Space Lab

Sheet: /IMX8XQXP SCALES Mariner Carrier Board/Power/

File: Pgood_Power.kicad_sch

Title: Leviathan V1

Size: A5	Date: 2025-10-29	**Rev: V1**
KiCad E.D.A. 10.0.1		Id: 16/16