Board Description

This merger board seeks to combine the SCALES EPS board with the SCALES IMX8 Carrier Board. Both boards have undergone three revisions, this merger will combine the final revisions of both with each of them undergoing some more modifications based on seperate board reviews. Notable differences for each board compared to their individual counterparts are listed below.

Changes requested by True from Phytec were applied, based on the returned file 'imx8_carrier_v3_dsmith.pdf' recieved on 11/6/2025

SCALES_EPS

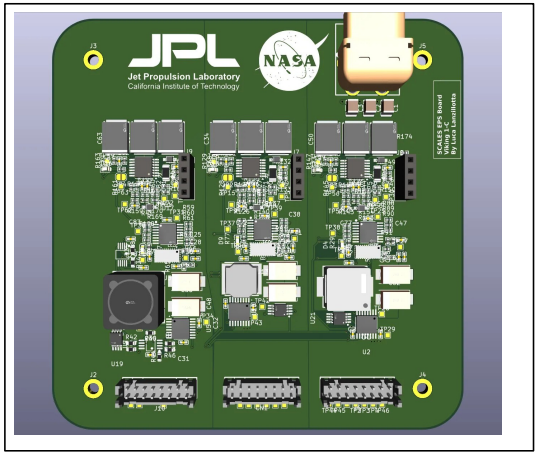

File: SCALES_EPS.kicad_sch

IMX8XQXP SCALES Mariner Carrier Board

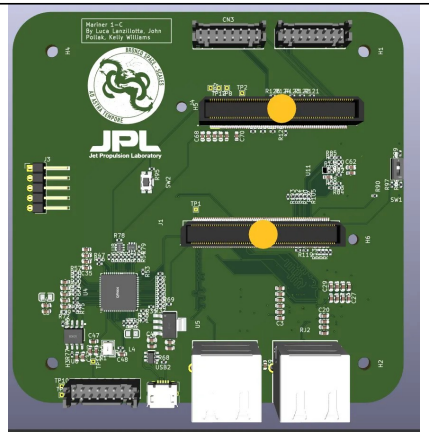

File: imx8qxp_carrier_board.kicad_sch

Block Diagram

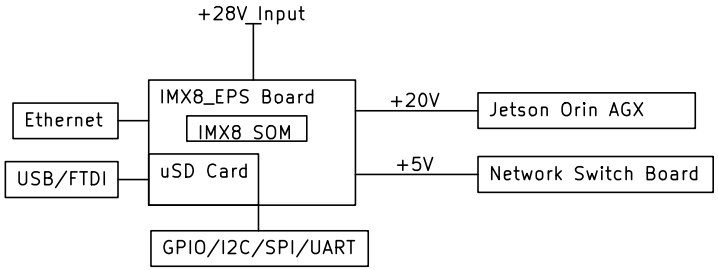

By Luca Lanzillotta & John Pollack
Bronco Space Lab

Sheet: /
File: imx8x_eps_leviathan.kicad_sch

Title: Leviathan V1

Size: A5	Date: 2025-10-29	**Rev: V1**
KiCad E.D.A. 9.0.3		Id: 1/16

EPS WD/Power On Conn. Ops

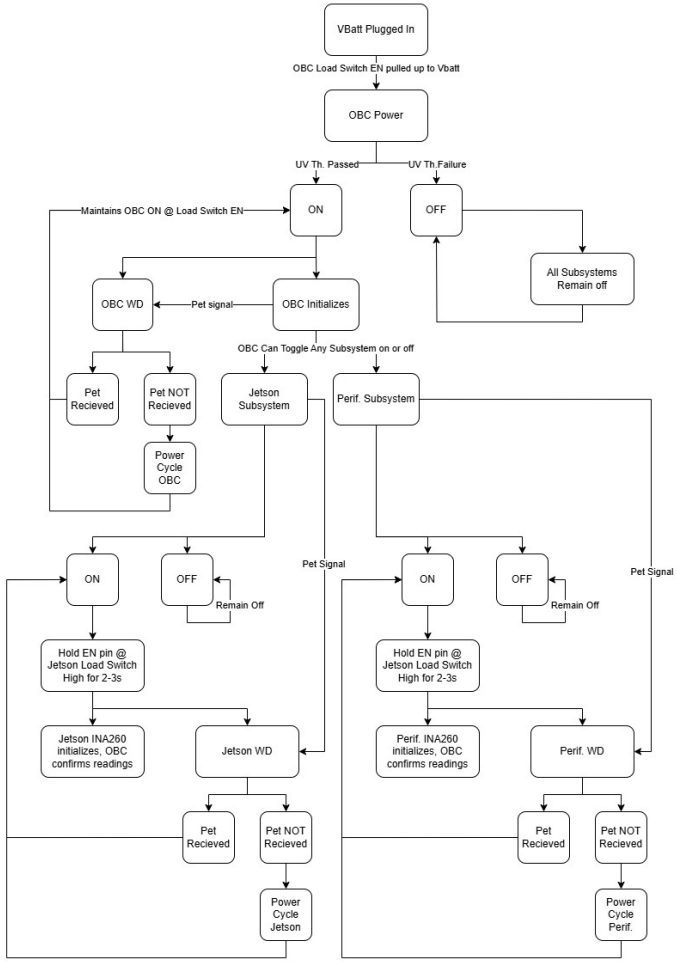

Power requirements per subsystem
OBC: 28v to 3.3v @ 2A
Jetson: 28v to 20v @ 4A
Perif: 28v to 5v @ 2A

Power on sequencing:
OBC powers when Vbatt is supplied. OBC controls operation of the Jetson as well as the Peripheral system via GPIO pins to the respective subsystem load switch.

Startup time for the Jetson on enable is ~10ms
Startup time for the Peripheral on enable is ~1ms
Startup time for the OBC on boot is ~1ms

Vbatt = [24.0, 28.8, 33.6] Due to Li-Ion battery charged and discharged states

Signal point ground from power board to rest of system

I2C Addresses Being Used:

INA260 OBC Subsystem: 0x41 (01000001)
INA260 Perif. Subsystem: 0x45 (01000101)
INA260 Jetson Subsystem: 0x40 (01000000)

MCP9808 OBC Subsystem: 0x19 (0001 1001)
MCP9808 Perif. Subsystem: 0x1A (0001 1010)
MCP9808 Jet. Subsystem: 0x1B (0001 1011)

EPS Block Diagram

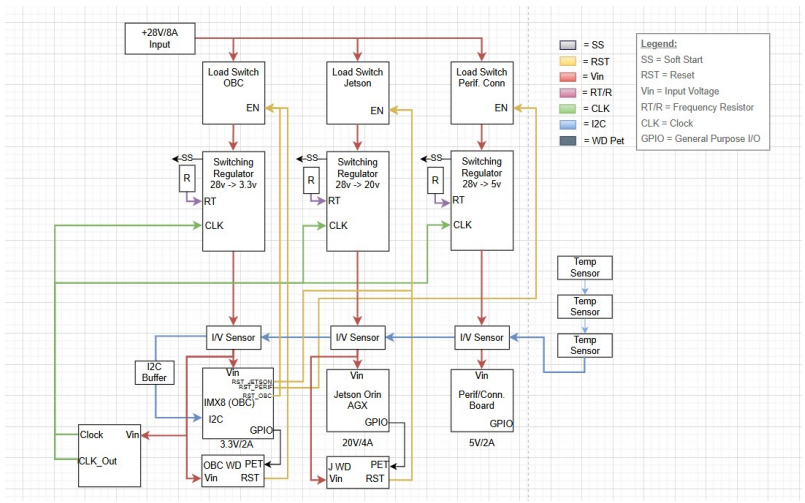

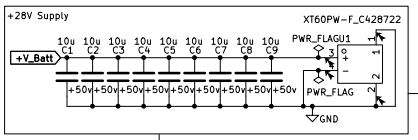

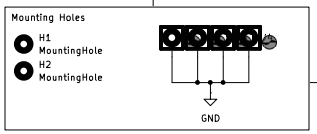

OBC_Subsystem

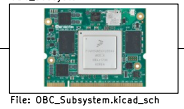

File: OBC_Subsystem.kicad_sch

Jetson_Subsystem

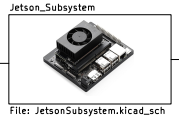

File: JetsonSubsystem.kicad_sch

Perif_Subsystem

File: Perif_Subsystem.kicad_sch

Temperature Sensors

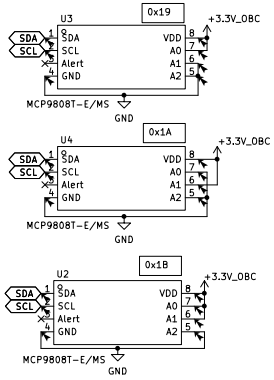

By Luca Lanzillotta & John Pollack
Bronco Space Lab
Sheet: /SCALES_EPS/
File: SCALES_EPS.kicad_sch

Title: Leviathan V1

Size: A3	Date: 2025-10-29	**Rev: V1**
KiCad E.D.A. 9.0.3		Id: 2/16

IMX8 SCALES Merger Board

Variant: Pre-Flight Testing Board

The IMX8 Scales Merger Board is a minimized version of the IMX8 Dev board combined with the SCALES EPS Board

Board Description:
Provided serial communications for end user: FTDI, UART, SPI, I2C
Power Input: From SCALES EPS Rev F (Hirose DF11 2x8 Connector)
Ethernet: 2, 10/100 Base-T RJ-45 Connectors
SPI/GPIO/I2C: Provided via Hirose DF11 2x8 Connector
SOM Connector: 2x140 proprietary Samtec Connector for IMX8QXP SOM

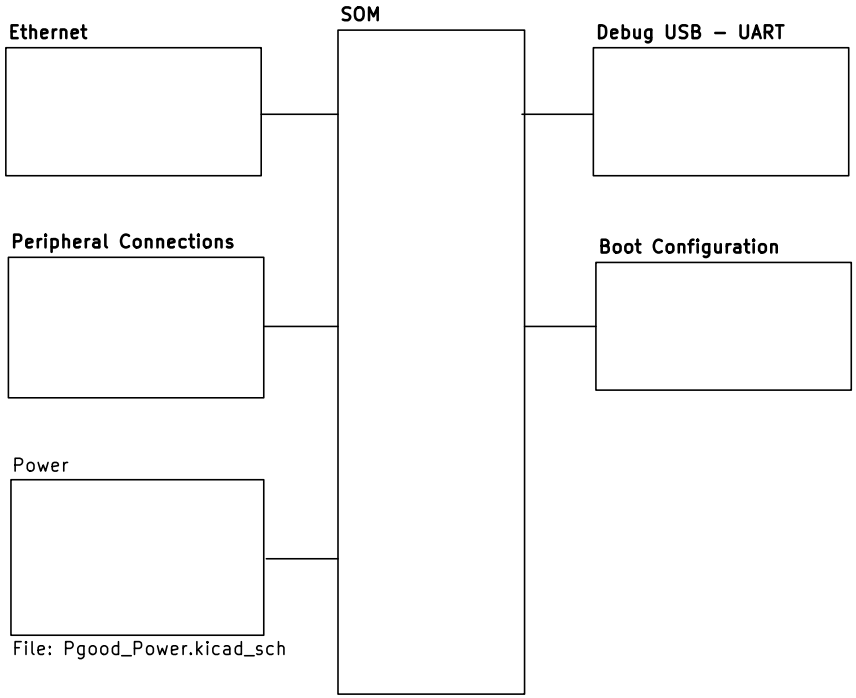

By Luca Lanzillotta & John Pollack
Bronco Space Lab

Sheet: /IMX8XQXP SCALES Mariner Carrier Board/
File: imx8qxp_carrier_board.kicad_sch

Title: Leviathan V1

Size: A5	Date: 2025-10-29	**Rev: V1**
KiCad E.D.A. 9.0.3		Id: 3/16

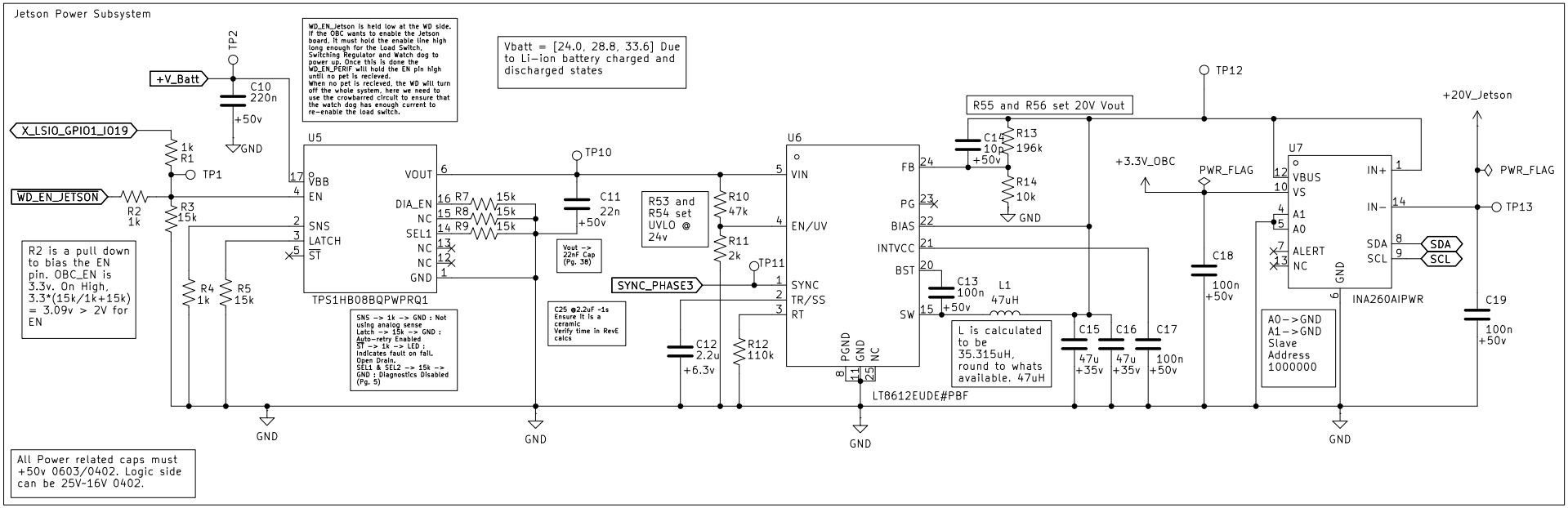

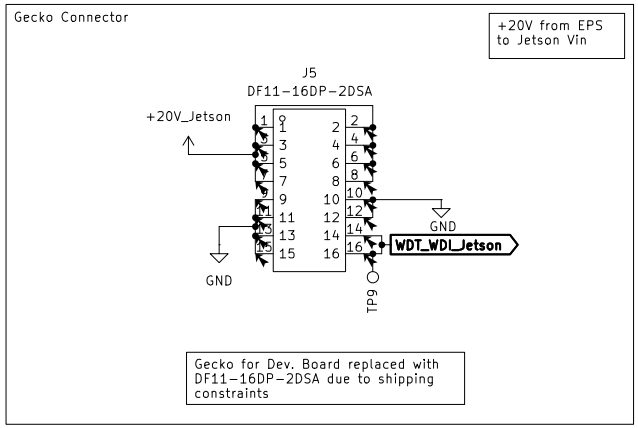

WD_Jetson

File: WD_Jetson.kicad_sch

To configure: (Pg.8)
SYNC (Tied to Clock Phase 2) DONE
RT (Set default frequency to 400khz) DONE
EN/UV threshold (-24v = UV, due to Li-ion discharge)(Pg. 15) DONE
PGND (Tie to GND) DONE
SW (Tie to inductor and setup the boost capacitor) DONE
BST (add 0.1uF bypass cap) DONE
INTVCC (add 0.1uF bypass cap) DONE
BIAS (If Vout is greater than 3.3v tie to vout)
FB (Set Vout via R1 and R2 using FB Setup Pg.12) DONE
TR/SS (Select a soft start time) -1s -> 2.16uF DONE
NC (Tie to ground) DONE

By Luca Lanzillotta & John Pollack
Bronco Space Lab

Sheet: /SCALES_EPS/Jetson_Subsystem/
File: JetsonSubsystem.kicad_sch

Title: Leviathan V1

Size: A4	Date: 2025-10-29	**Rev: V1**
KiCad E.D.A. 9.0.3		Id: 4/16

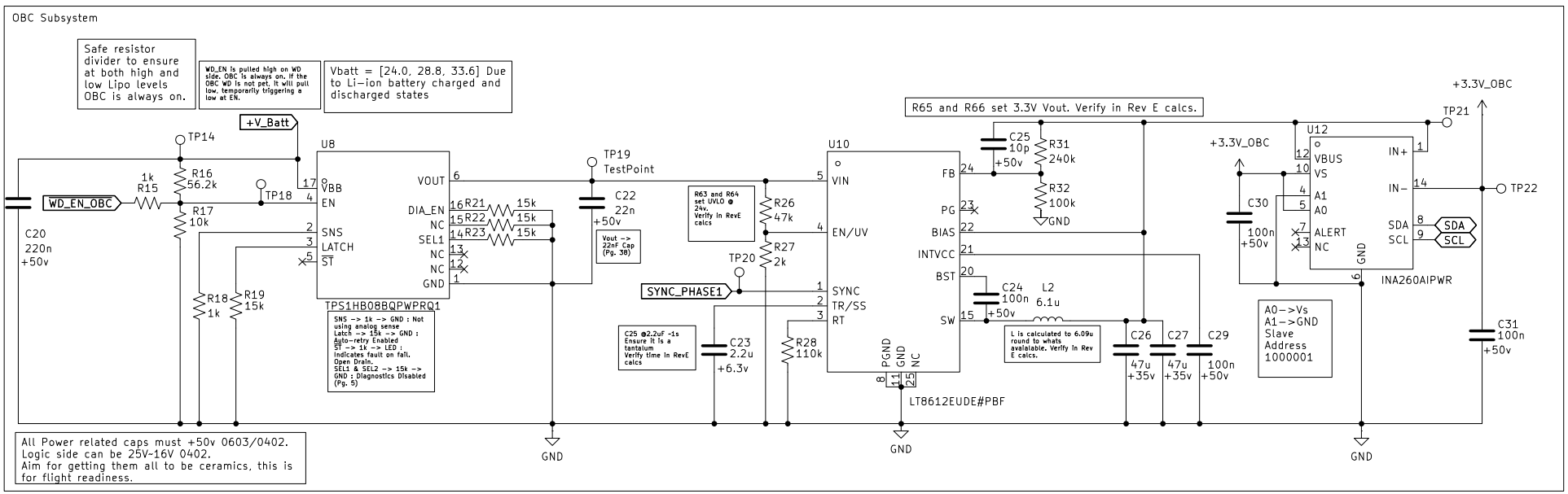

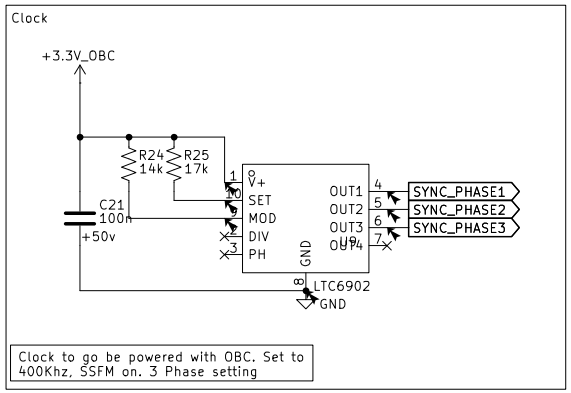

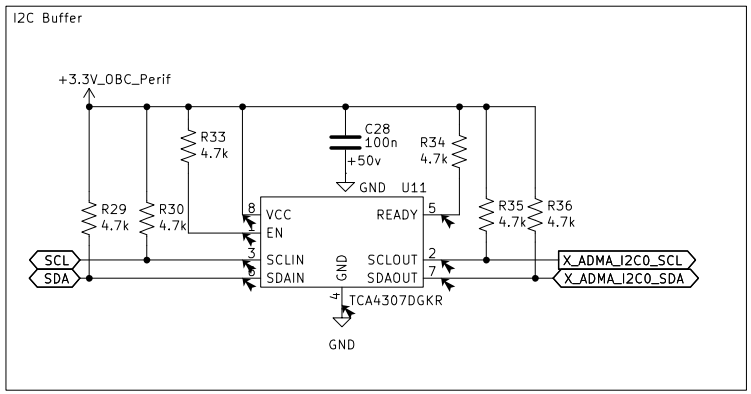

WD_OBC

To configure: (Pg.8)
SYNC (Tied to Clock Phase 2) DONE
RT (Set default frequency to 400khz) DONE
EN/UV threshold (~24v = UV, due to Li-ion discharge)(Pg. 15) DONE
PGND (Tie to GND) DONE
SW (Tie to inductor and setup the boost capacitor) DONE
BST (add 0.1uF bypass cap) DONE
INTVCC (add 0.1uF bypass cap) DONE
BIAS (If Vout is greater than 3.3v tie to vout)
FB (Set Vout via R1 and R2 using FB Setup Pg.12) DONE
TR/SS (Select a soft start time) ~1s -> 2.16uF DONE
NC (Tie to ground) DONE

File: WD_OBC.kicad_sch

By Luca Lanzillotta & John Pollack
Bronco Space Lab

Sheet: /SCALES_EPS/OBC_Subsystem/
File: OBC_Subsystem.kicad_sch

Title: Leviathan V1

Size: A4	Date: 2025-10-29	**Rev: V1**
KiCad E.D.A. 9.0.3		Id: 5/16

Peripheral Subsystem

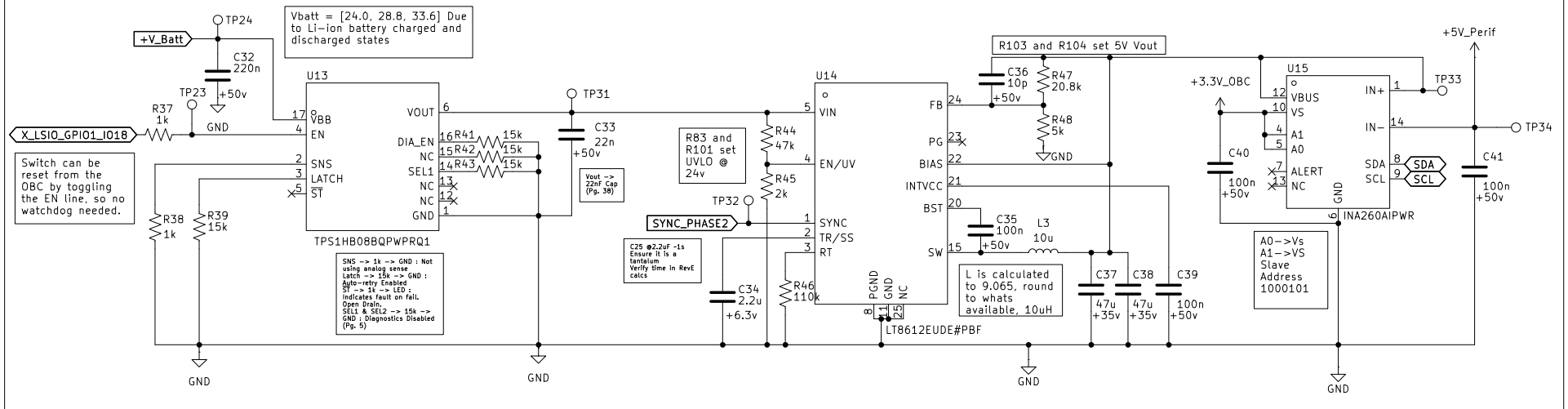

Gecko Connector

Gecko for Dev. Board replaced with DF11-16DP-2DSA due to shipping constraints

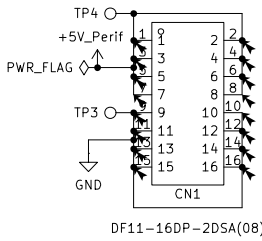

Gecko 16 pin Male connector

To configure: (Pg.8)
SYNC (Tied to Clock Phase 2) DONE
RT (Set default frequency to 400khz) DONE
EN/UV threshold (~24v = UV, due to Li-ion discharge)(Pg. 15) DONE
PGND (Tie to GND) DONE
SW (Tie to inductor and setup the boost capacitor) DONE
BST (add 0.1uF bypass cap) DONE
INTVCC (add 0.1uF bypass cap) DONE
BIAS (If Vout is greater than 3.3v tie to vout)
FB (Set Vout via R1 and R2 using FB Setup Pg.12) DONE
TR/SS (Select a soft start time) ~1s -> 2.16uF DONE
NC (Tie to ground) DONE

By Luca Lanzillotta & John Pollack
Bronco Space Lab

Sheet: /SCALES_EPS/Perif_Subsystem/
File: Perif_Subsystem.kicad_sch

Title: Leviathan V1

Size: A4	Date: 2025-10-29	**Rev: V1**
KiCad E.D.A. 9.0.3		Id: 6/16

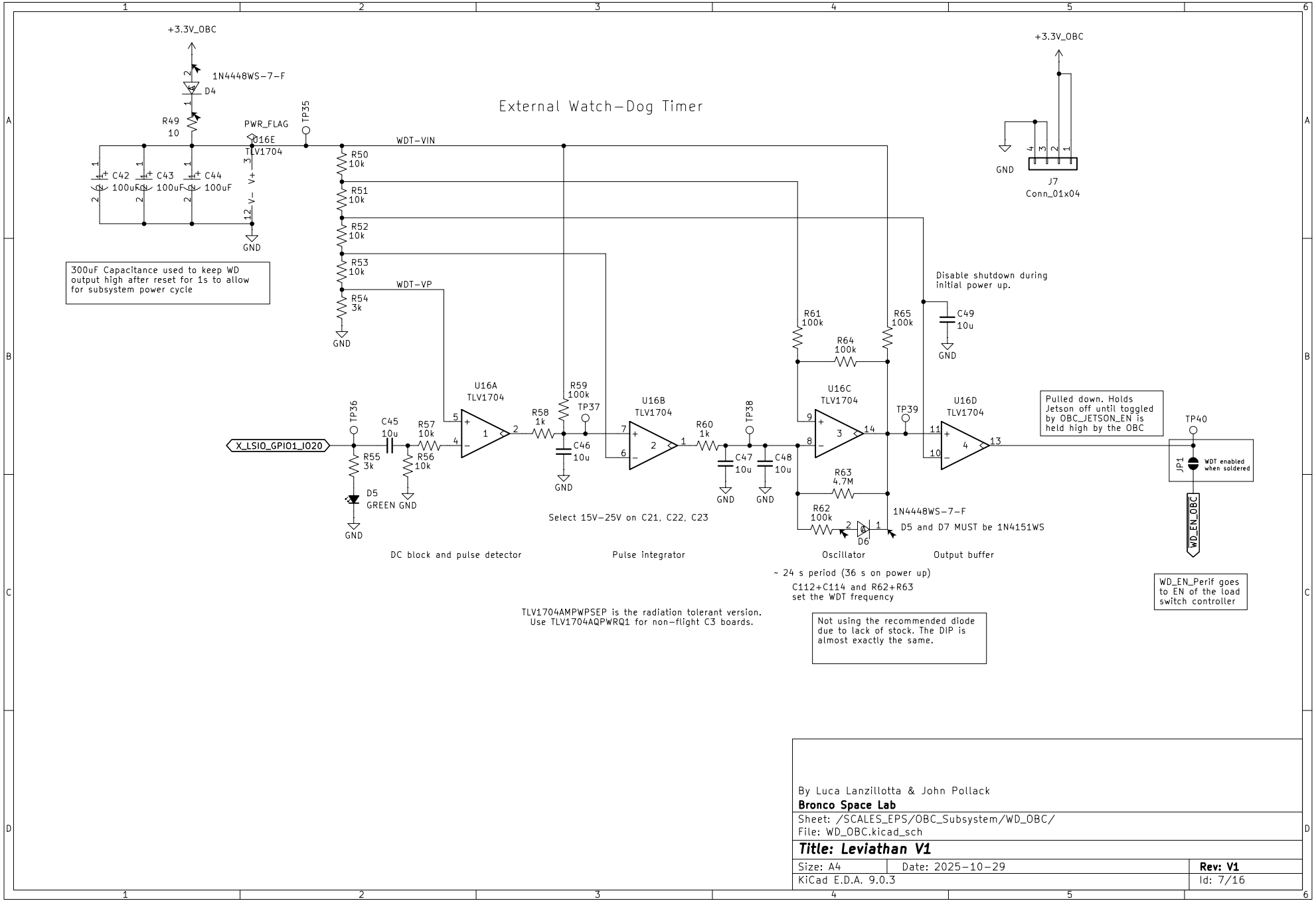

By Luca Lanzillotta & John Pollack

Bronco Space Lab

Sheet: /SCALES_EPS/OBC_Subsystem/WD_OBC/

File: WD_OBC.kicad_sch

Title: Leviathan V1

Size: A4	Date: 2025-10-29	**Rev: V1**
KiCad E.D.A. 9.0.3		Id: 7/16

External Watch-Dog Timer

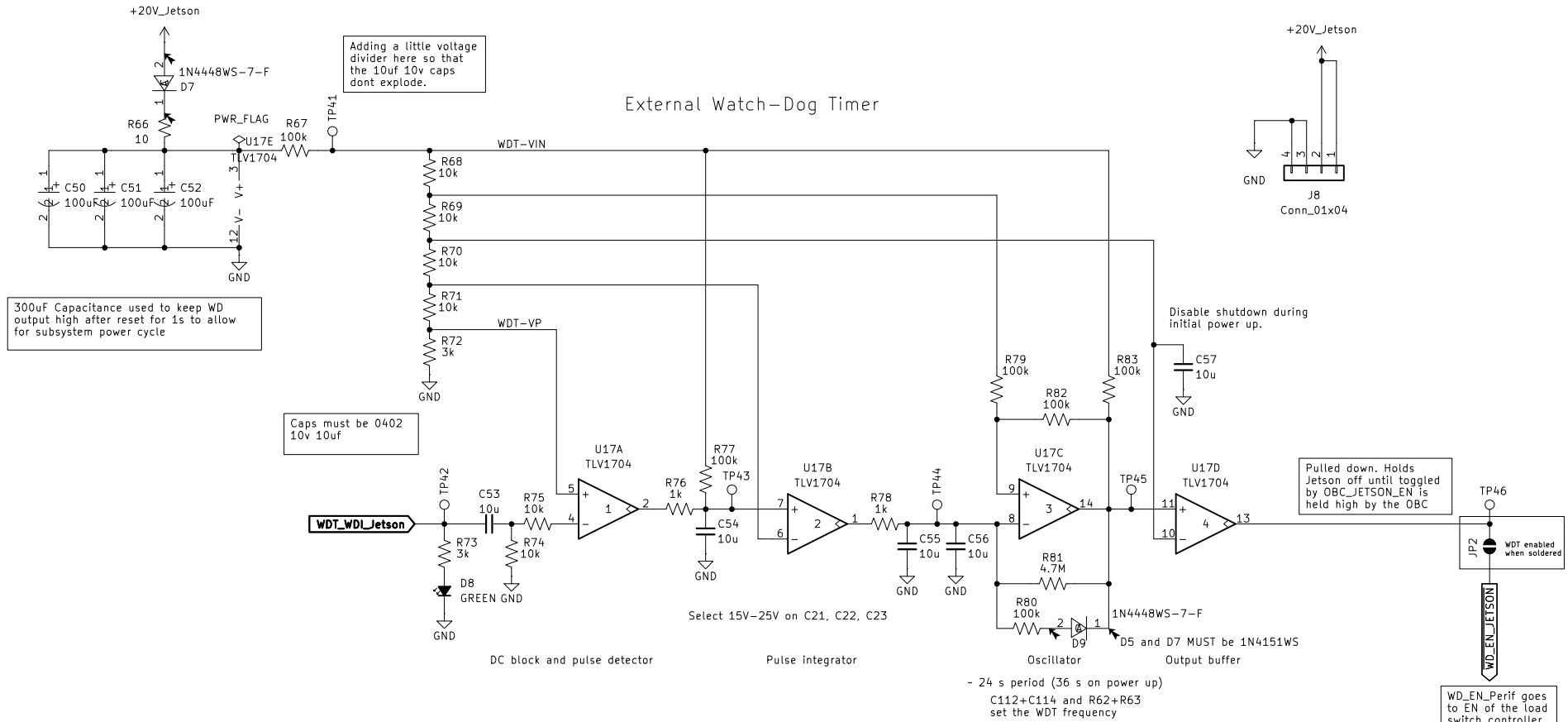

By Luca Lanzillotta & John Pollack

Bronco Space Lab

Sheet: /SCALES_EPS/Jetson_Subsystem/WD_Jetson/

File: WD_Jetson.kicad_sch

Title: Leviathan V1

Size: A4	Date: 2025-10-29	**Rev: V1**
KiCad E.D.A. 9.0.3		Id: 8/16

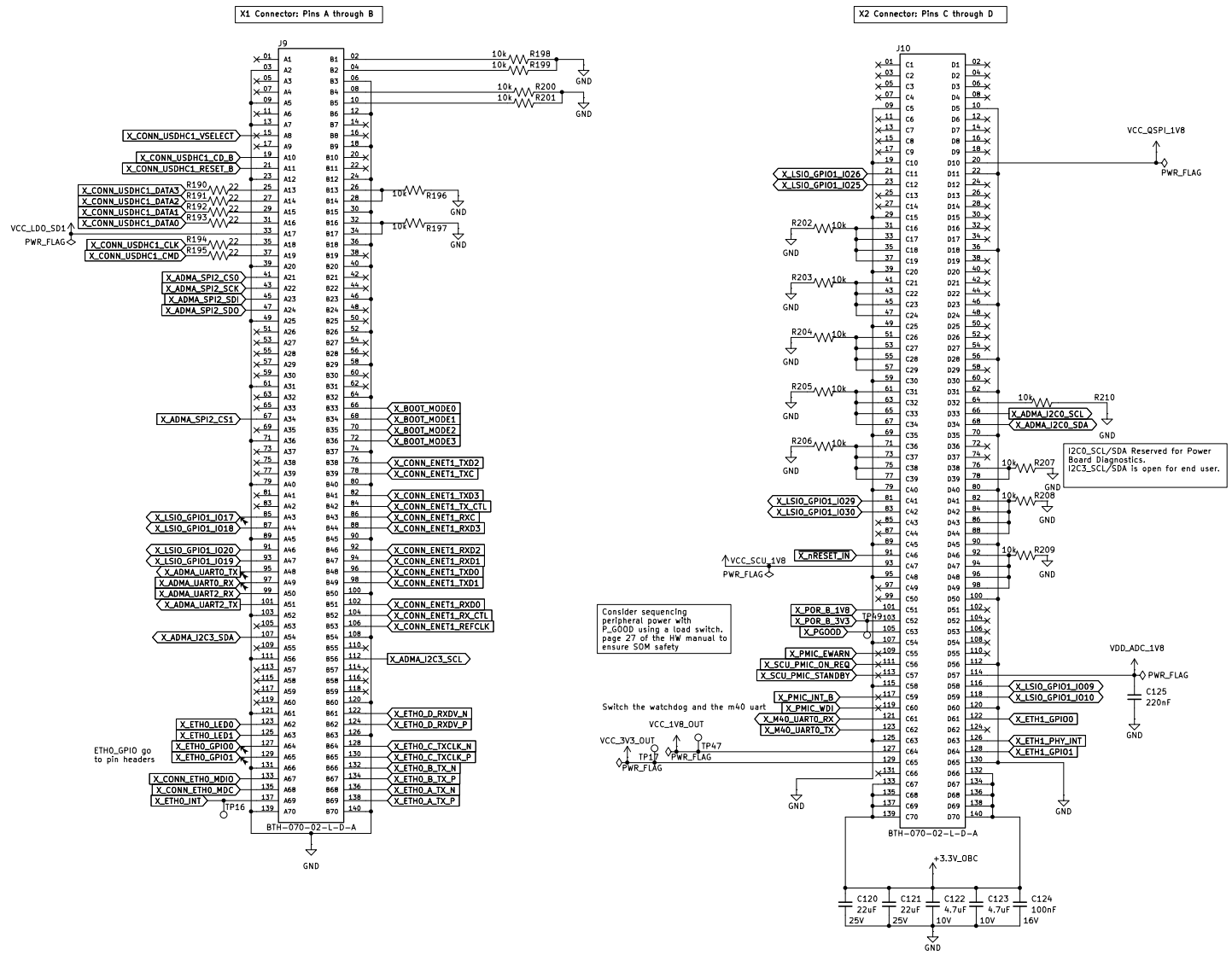

By Luca Lanzillotta & John Pollack

Bronco Space Lab

Sheet: /IMXBXQXP SCALES Mariner Carrier Board/SOM/

File: SOM.kicad_sch

Title: Leviathan V1

Size: A3	Date: 2025-10-29	**Rev: V1**
KiCad E.D.A. 9.0.3		Id: 9/16

Description:
The SDCard/Wifi Mux(s) have been removed to allow for Default SDCard boot configuration and Utilization. If it is desired to use eMMC, then there must be a switch to toggle between boot modes, this is BOOTMODE[3:0] bits 0010 to eMMCand 0011 to SDcard respectively. Due to removal of all other boot configurations, we only need to switch the last bit using the provided switch we will include.

SD Card Power Enable Switch

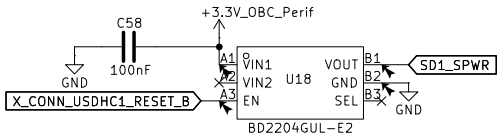

Bootmode Toggler

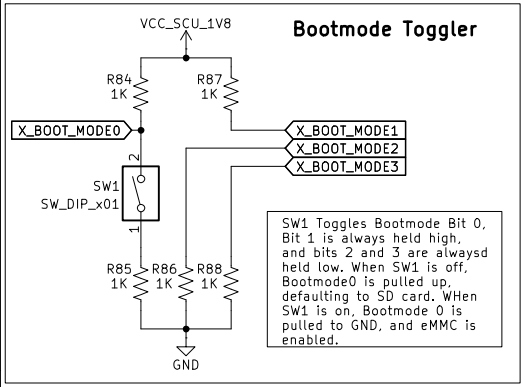

SW1 Toggles Bootmode Bit 0, Bit 1 is always held high, and bits 2 and 3 are alwaysd held low. When SW1 is off, Bootmode0 is pulled up, defaulting to SD card. WHen SW1 is on, Bootmode 0 is pulled to GND, and eMMC is enabled.

uSD Card Connector

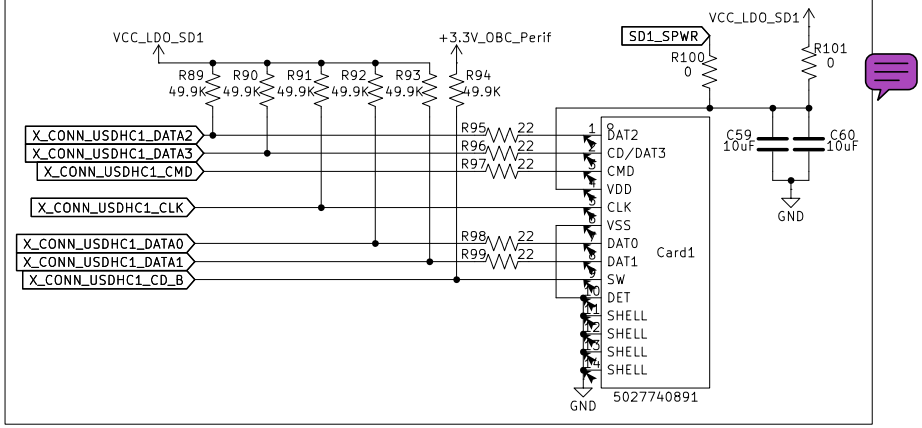

By Luca Lanzillotta & John Pollack

Bronco Space Lab

Sheet: /IMX8XQXP SCALES Mariner Carrier Board/Boot Configuration/
File: bootConfig.kicad_sch

Title: Leviathan V1

Size: A4	Date: 2025-10-29	**Rev: V1**
KiCad E.D.A. 9.0.3		Id: 10/16

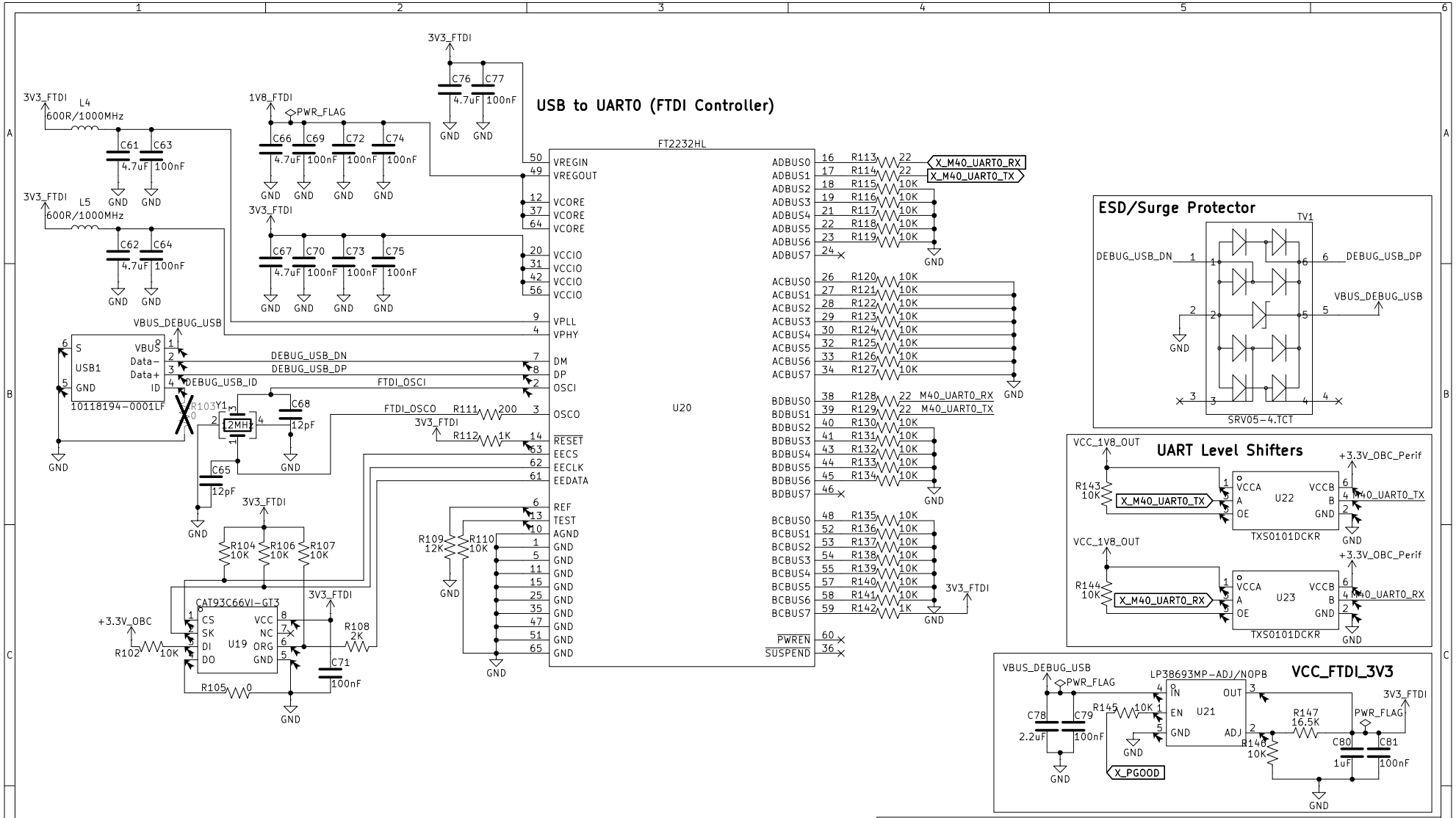

Description:
UART0 on the SOM is reserved for UART-FTDI usage. The default BSP configures the SOM to use UART0 for debugging, this allows the user to be able to use UART to send and recieve commands and telemetry with the SOM. The chip below facilitates UART to FTDI translation so that the end user can utilize a serial port on a seperate machine to interface directly. This design and chip are provided by Phytec.

By Luca Lanzillotta & John Pollack

Bronco Space Lab

Sheet: /IMX8XQXP SCALES Mariner Carrier Board/Debug USB - UART/

File: debug.kicad_sch

Title: Leviathan V1

Size: A4	Date: 2025-10-29	**Rev: V1**
KiCad E.D.A. 9.0.3		Id: 11/16

10/100/1000 Ethernet

Description: Ethernet configuration and bootstrap modes are configured on the SOM.
This is all ported from the IMX8X dev board. There are two available Ethernet configurations for the SOM, one is preconfigured on the SOM with an onboard RGMII translator, and the second one is included in this carrier board.

Anything going to the SOM is single ended. 50ohm. Impedance Controlled.

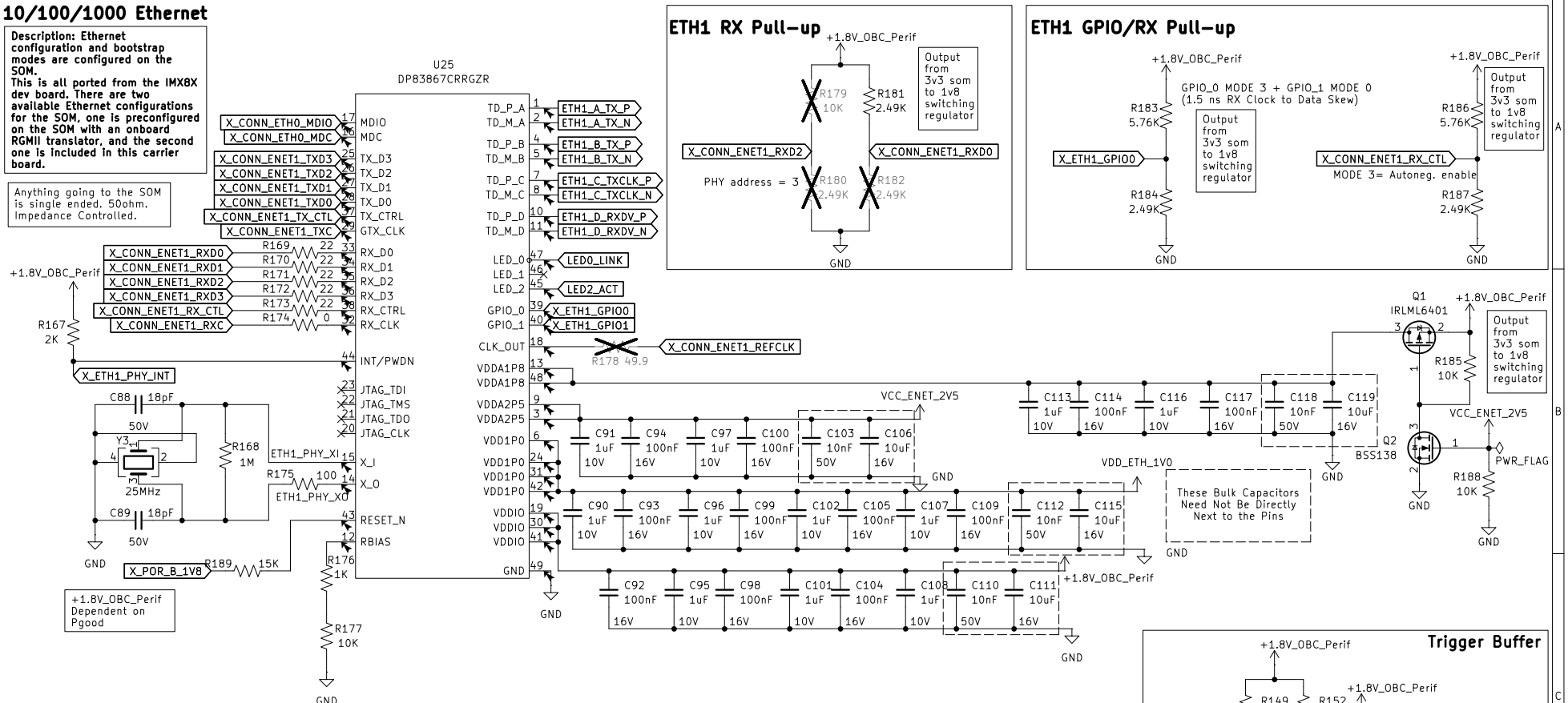

ETH1 RX Pull-up

ETH1 GPIO/RX Pull-up

Trigger Buffer

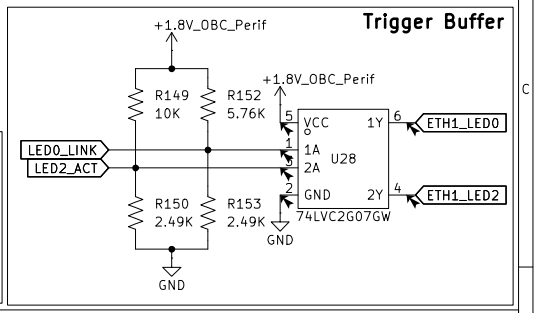

Ethernet Ports

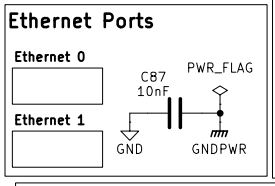

VDD_ETH_2V5_SUPPLY

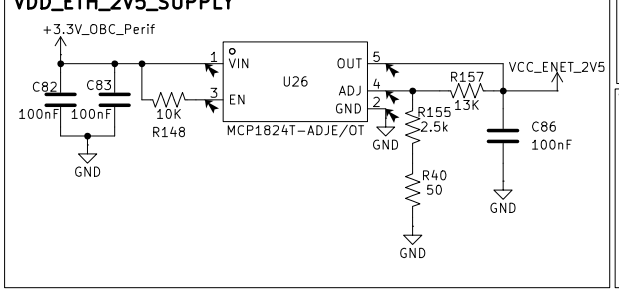

VDD_ETH_1V0_SUPPLY

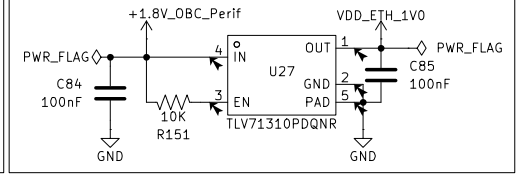

3v3 dependent on Pgood. From Load switch

By Luca Lanzillotta & John Pollack
Bronco Space Lab
Sheet: /IMX8XQXP SCALES Mariner Carrier Board/Ethernet/
File: ethernet.kicad_sch

Title: Leviathan V1

Size: A4	Date: 2025-10-29	**Rev: V1**
KiCad E.D.A. 9.0.3		Id: 12/16

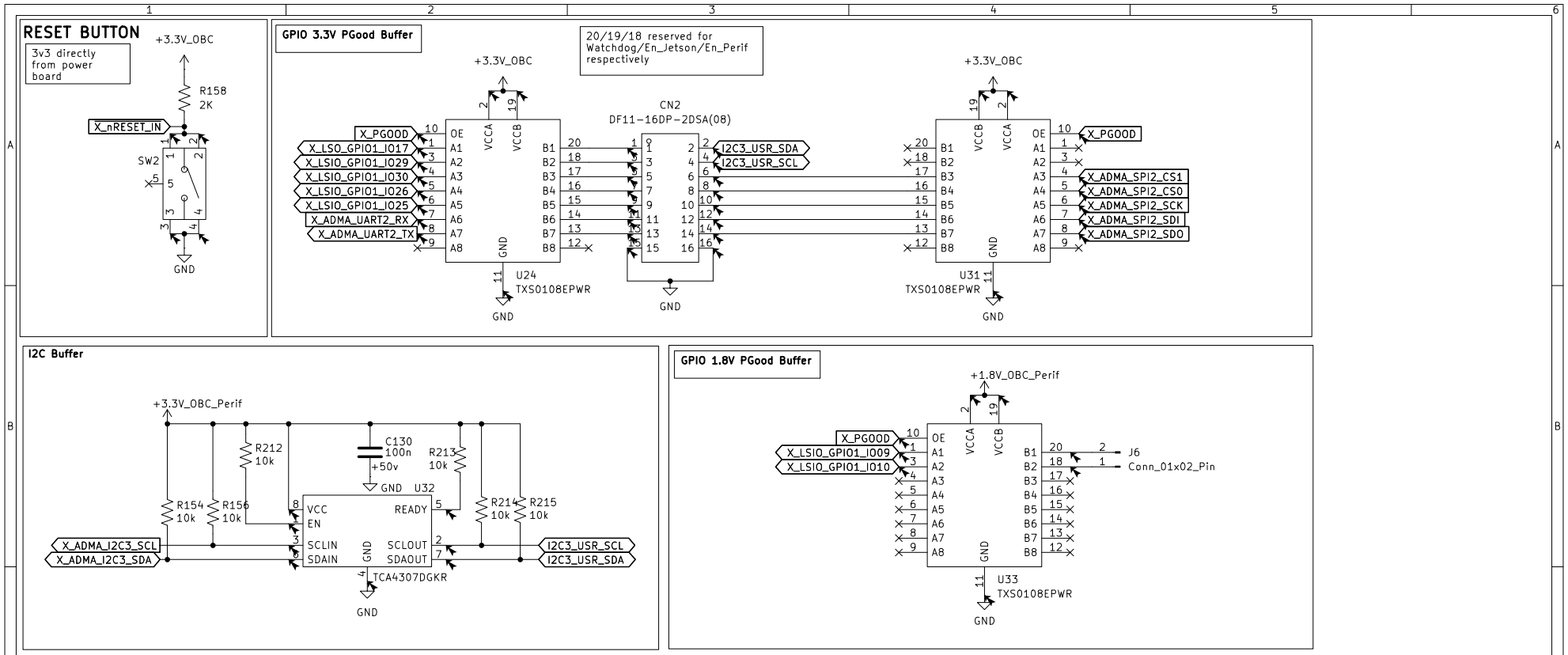

By Luca Lanzillotta & John Pollack

Bronco Space Lab

Sheet: /IMX8XQXP SCALES Mariner Carrier Board/Peripheral Connections/

File: periphCon.kicad_sch

Title: Leviathan V1

Size: A4	Date: 2025-10-29	**Rev: V1**
KiCad E.D.A. 9.0.3		Id: 13/16

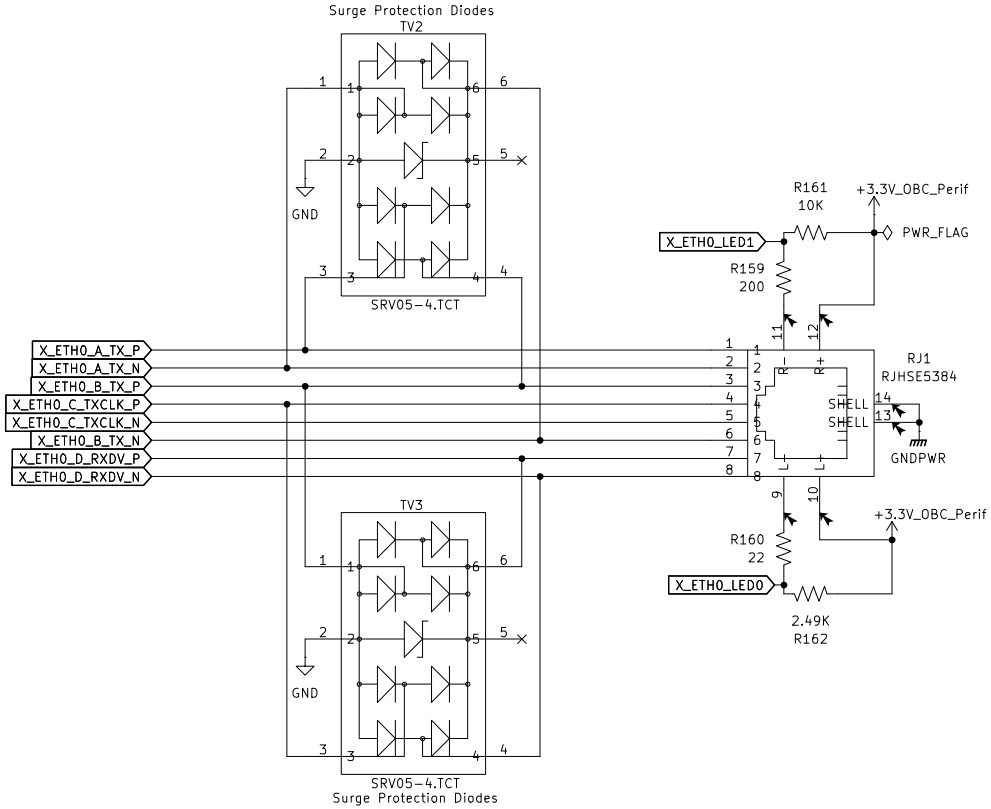

By Luca Lanzillotta & John Pollack

Bronco Space Lab

Sheet: /IMX8XQXP SCALES Mariner Carrier Board/Ethernet/Ethernet 0/

File: ethernet0.kicad_sch

Title: Leviathan V1

Size: A4	Date: 2025-10-29	**Rev: V1**
KiCad E.D.A. 9.0.3		Id: 14/16

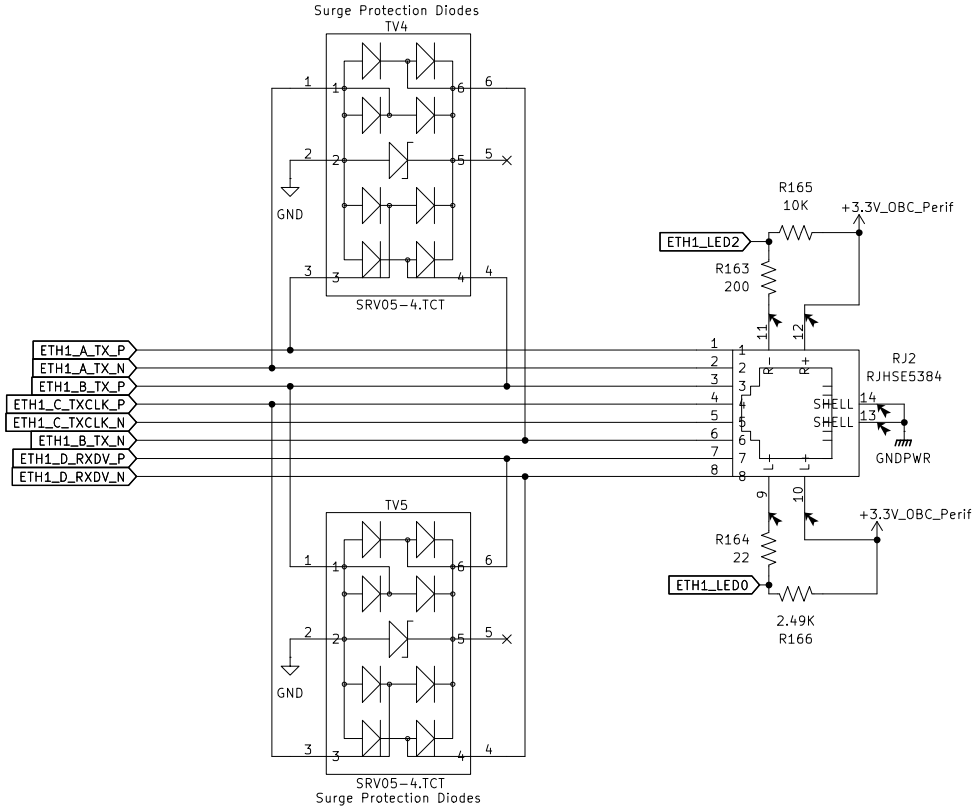

By Luca Lanzillotta & John Pollack

Bronco Space Lab

Sheet: /IMX8XQXP SCALES Mariner Carrier Board/Ethernet/Ethernet 1/

File: ethernet1.kicad_sch

Title: Leviathan V1

Size: A4	Date: 2025-10-29	**Rev: V1**
KiCad E.D.A. 9.0.3		Id: 15/16

3V3_OBC to VCC_3V3 Load Switch

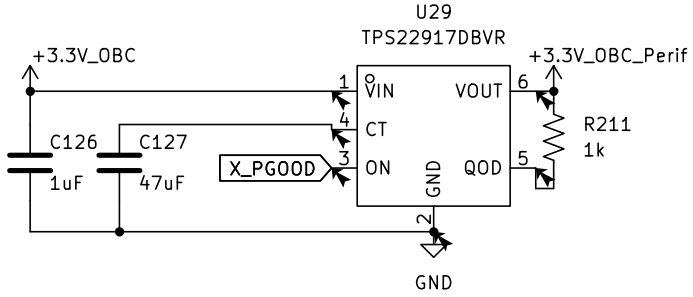

Using PGood to power sequence 3V3 Dependent peripheral devices on the carrier board.

3V3_OBC to VCC_1V8 Switching Regulator

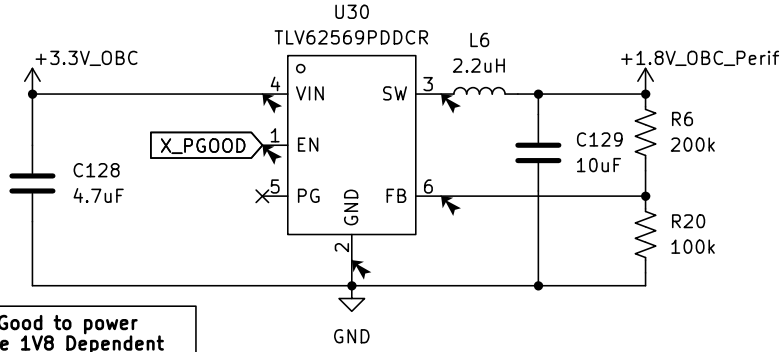

Using PGood to power sequence 1V8 Dependent peripheral devices on the carrier board.

By Luca Lanzillotta & John Pollack
Bronco Space Lab

Sheet: /IMX8XQXP SCALES Mariner Carrier Board/Power/
File: Pgood_Power.kicad_sch

Title: Leviathan V1

Size: A5	Date: 2025-10-29	**Rev: V1**
KiCad E.D.A. 9.0.3		Id: 16/16