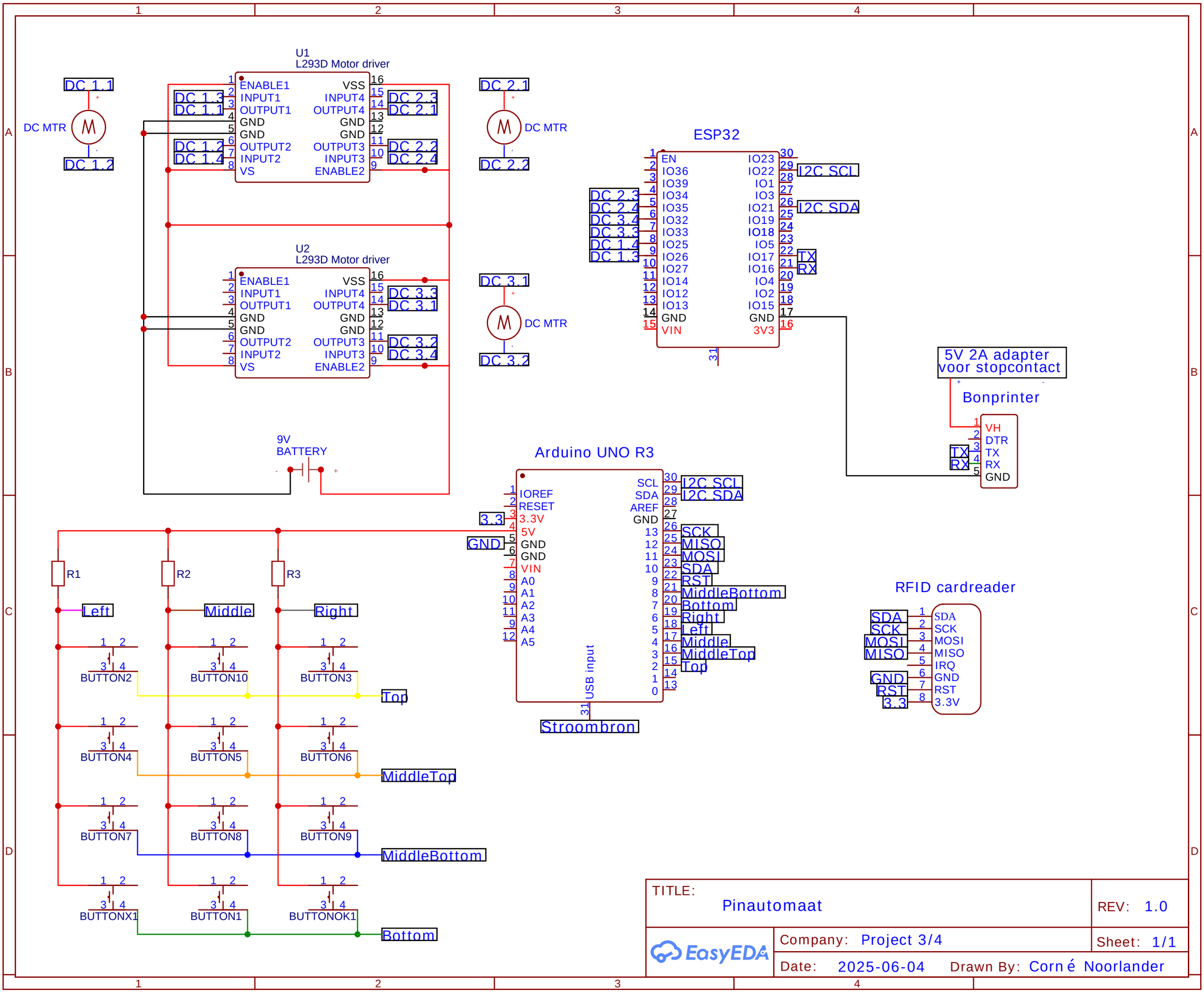

TITLE: Pinautomaat		REV: 1.0
EasyEDA	Company: Project 3/4	Sheet: 1/1
	Date: 2025-06-04 Drawn By: Corné Noorlander	