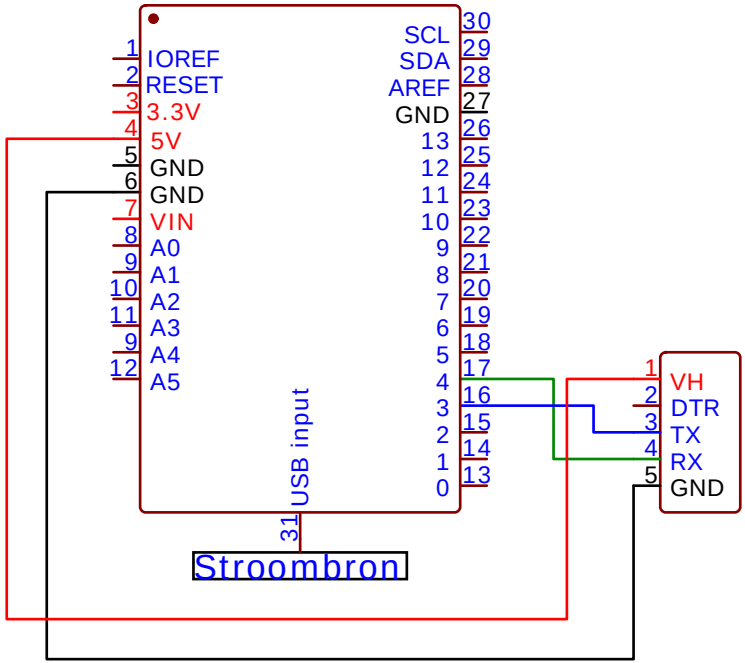

TITLE: Bonprinter

REV: 1.0

Company: Your Company

Sheet: 1/1

Date: 2025-02-21

Drawn By: Corne Noorlander