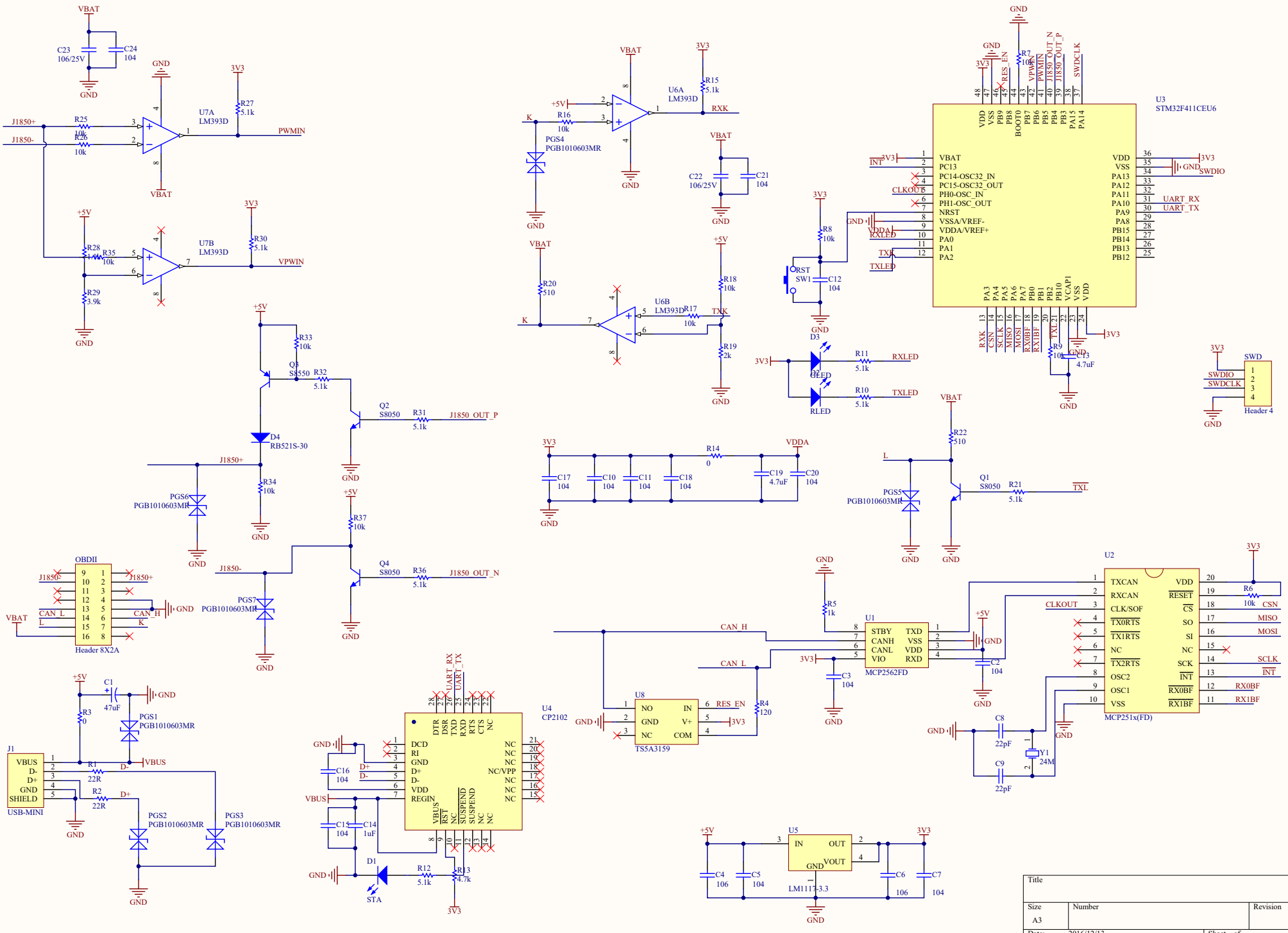

Title		
Size A3	Number	Revision
Date: 2016/12/13	Sheet of	
File: D:\PCBs\CAN_OMEGA\CAN_Omega.SchDoc	Drawn By:	

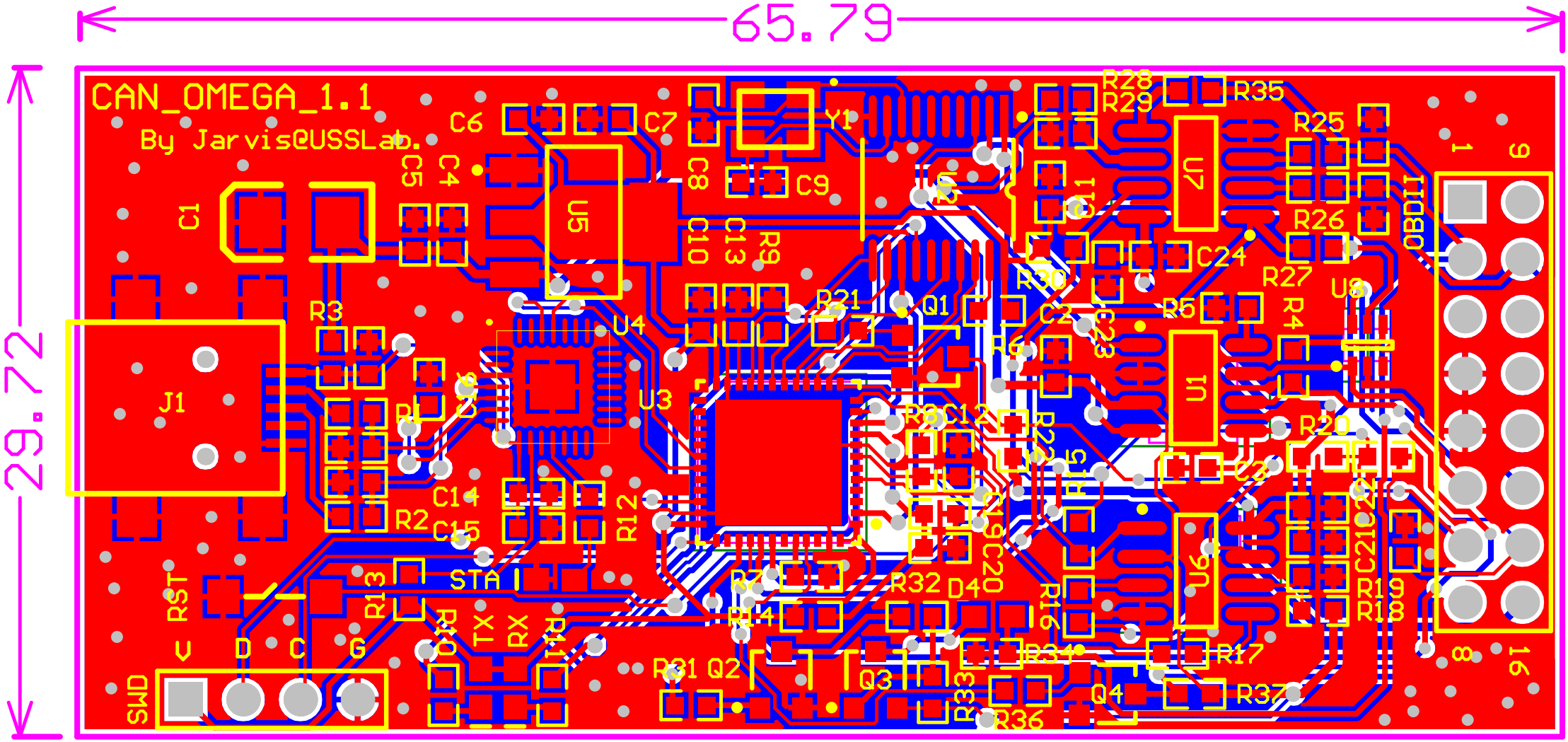
65.79
29.72
CAN_OMEGA_1.1
By JarvisQUSSLab.
C6
C7
Y1
C5
C4
C8
C9
U5
C1
C10
C13
R9
R28
R29
R35
R25
U7
R26
C24
R27
U8
OBDII
1
9
8
16
R3
R21
Q1
R30
C2
R5
R4
U4
U3
U1
J1
R8
C12
R20
C3
C14
C15
R2
R12
C20
C19
C21
C22
R19
R18
U6
RST
R13
STA
R7
R32
D4
R14
R31
Q2
Q3
R33
R36
Q4
R17
R37
SWD
V
D
C
G
RX0
TX
RX
TX0