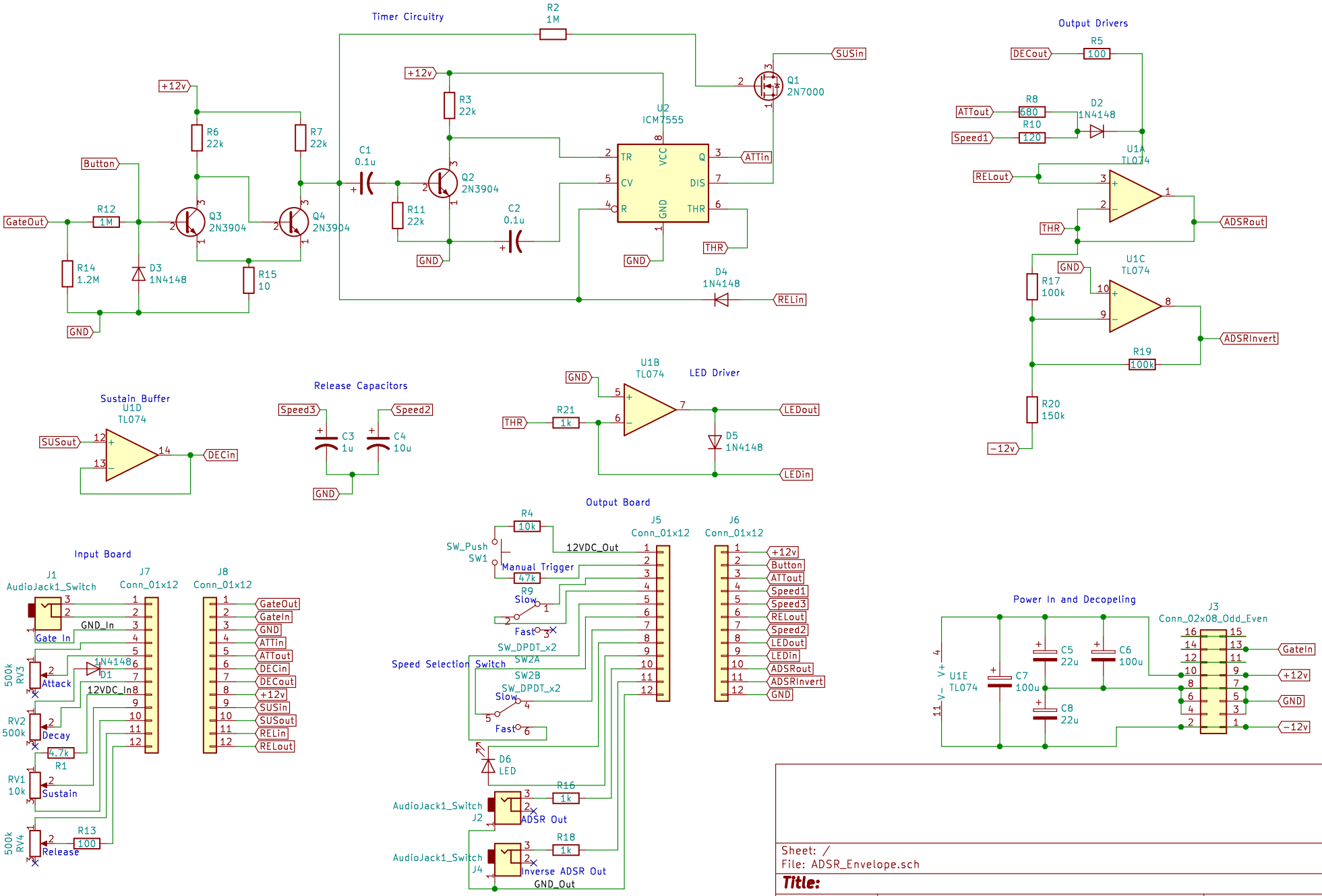

Sheet: /
File: ADSR_Envelope.sch

Title:

Size: A4	Date:	**Rev:**
KiCad E.D.A. kicad (5.1.5)-3		Id: 1/1