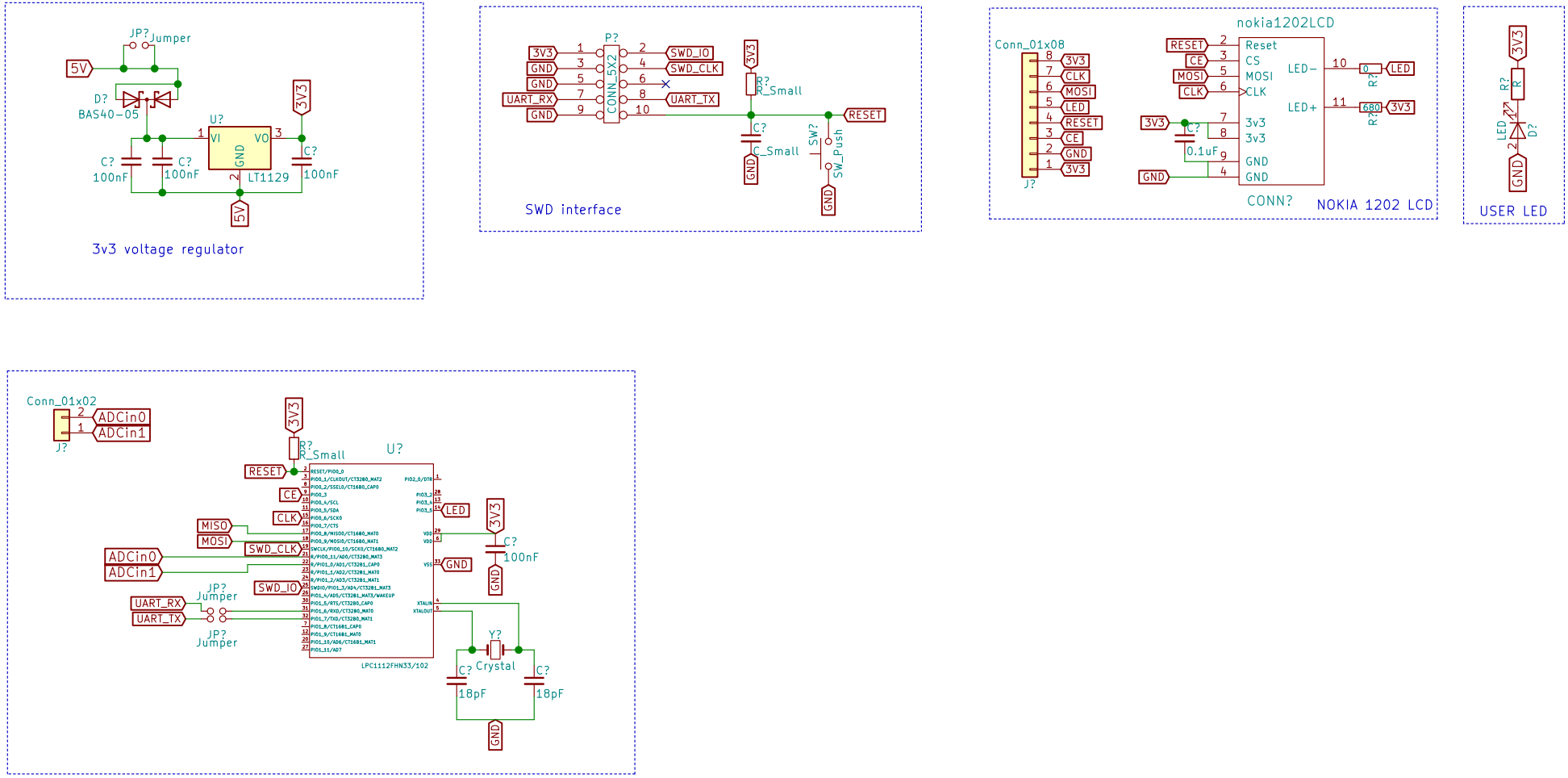

Drawn by: Chelmis Muthoni T.
tchelmis07@gmail.com
The University of Nairobi

Sheet: /
File: photodiode.sch

Title: Photodiode

Size: A4	Date: 2018-01-24	**Rev: 1**
KiCad E.D.A. kicad 4.0.7		Id: 1/1