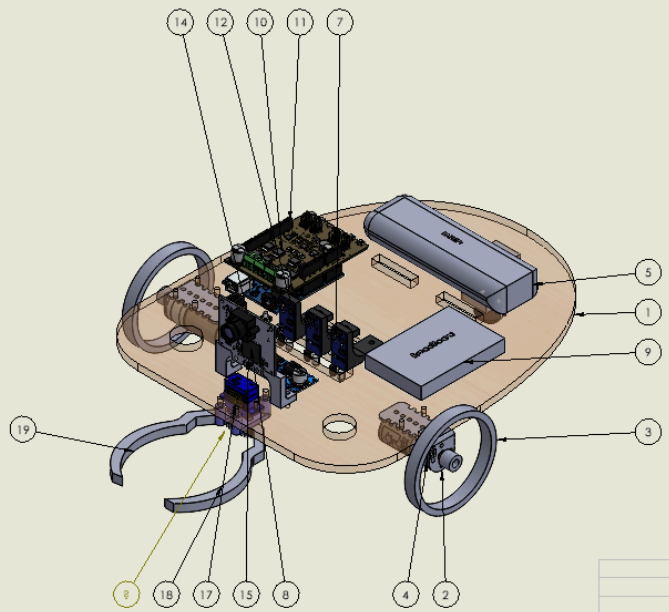

ITEM NO.	PART NUMBER	DESCRIPTION	QTY.
1	Chassis G		1
2	GearmotorBracket		2
3	Wheel		2
4	34.1_Gearmotor		2
5	part_battery		1
6	BallCaster		1
7	IRSensor		3
8	BuckConverter		1
9	BreadBoard		1
10	arduino uno		1
11	Driver_Sheild		1
12	LBracket		3
13	Spacer		1
14	CMUcam5 Pixy		1
15	Double_L_Bracket		1
16	Gear_Connector		1
17	MicroServo		1
18	Gear1		1
19	Gear2		1

PROPRIETARY AND CONFIDENTIAL

THE INFORMATION CONTAINED IN THIS DRAWING IS THE SOLE PROPERTY OF <INSERT COMPANY NAME HERE>. ANY REPRODUCTION IN PART OR AT A WHOLE WITHOUT THE WRITTEN PERMISSION OF <INSERT COMPANY NAME HERE> IS PROHIBITED.

NEXT ASSY | USED ON | APPLICATION

UNLESS OTHERWISE SPECIFIED:
DIMENSIONS ARE IN INCHES
TOLERANCES:
FRACTIONAL ±
ANGULAR: MACH ± BEND ±
TWO PLACE DECIMAL ±
THREE PLACE DECIMAL ±
INTERPRET GEOMETRIC TOLERANCE PER:
MATERIAL
FINISH
DO NOT SCALE DRAWING

	NAME	DATE
DRAWN		
CHECKED		
ENG APPR.		
MFG APPR.		
Q.A.		

COMMENTS:

TITLE:

SIZE | DWG. NO. | REV

BPrelim Design

SCALE: 1:4 | WEIGHT: | SHEET 1 OF 10

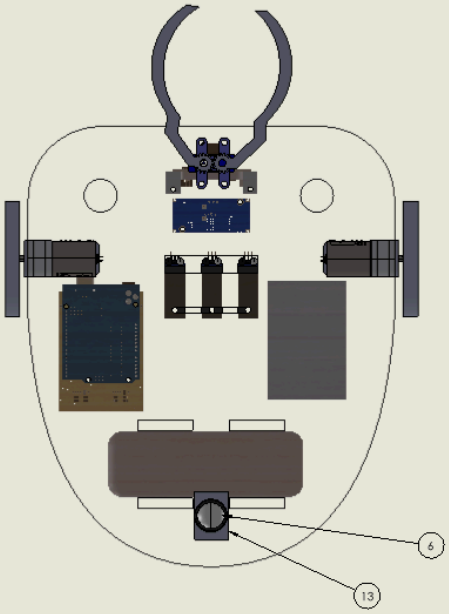

PROPRIETARY AND CONFIDENTIAL

THE INFORMATION CONTAINED IN THIS DRAWING IS THE SOLE PROPERTY OF <INSERT COMPANY NAME HERE>. ANY REPRODUCTION IN PART OR AT A WHOLE WITHOUT THE WRITTEN PERMISSION OF <INSERT COMPANY NAME HERE> IS PROHIBITED.

NEXT ASSY | USED ON | APPLICATION

UNLESS OTHERWISE SPECIFIED:
DIMENSIONS ARE IN INCHES
TOLERANCES:
FRACTIONAL ±
ANGULAR: MACH ± BEND ±
TWO PLACE DECIMAL ±
THREE PLACE DECIMAL ±
INTERPRET GEOMETRIC TOLERANCE PER:
MATERIAL
FINISH
DO NOT SCALE DRAWING

	NAME	DATE
DRAWN		
CHECKED		
ENG APPR.		
MFG APPR.		
Q.A.		

COMMENTS:

TITLE:

SIZE | DWG. NO. | REV

PBelim Design pg2

SCALE: 1:4 | WEIGHT: | SHEET 2 OF 10

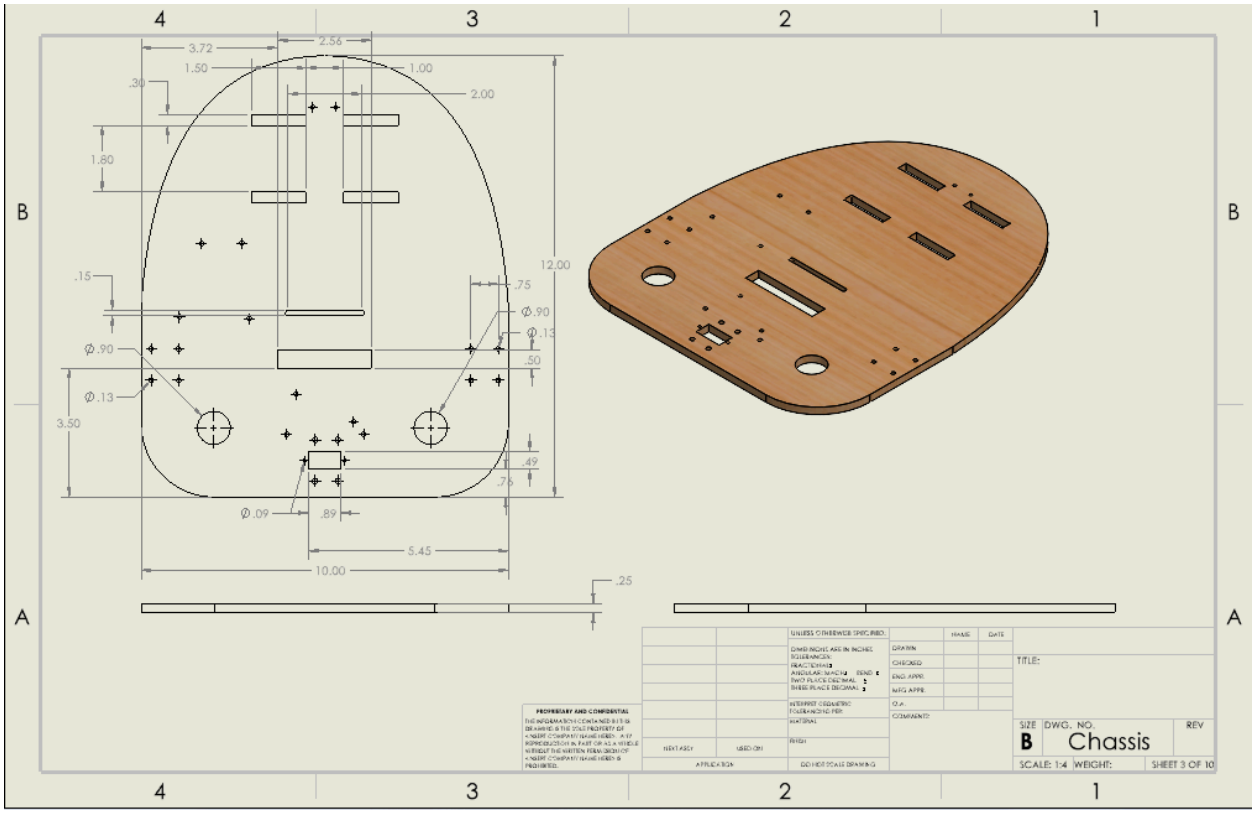
3.72
2.56
1.50
1.00
.30
2.00
1.80
12.00
.15
.75
Ø.90
Ø.13
Ø.90
.50
Ø.13
3.50
.49
.76
Ø.09
.89
5.45
10.00
.25
UNLESS OTHERWISE SPECIFIED:
DRAWN
CHECKED
ENG APPR.
MFG APPR.
Q.A.
COMMENTS:
TITLE:
PROPRIETARY AND CONFIDENTIAL
NEXT ASSY
USED ON
APPLICATION
DO NOT SCALE DRAWING
SIZE
DWG. NO.
REV
B
Chassis
SCALE: 1:4
WEIGHT:
SHEET 3 OF 10

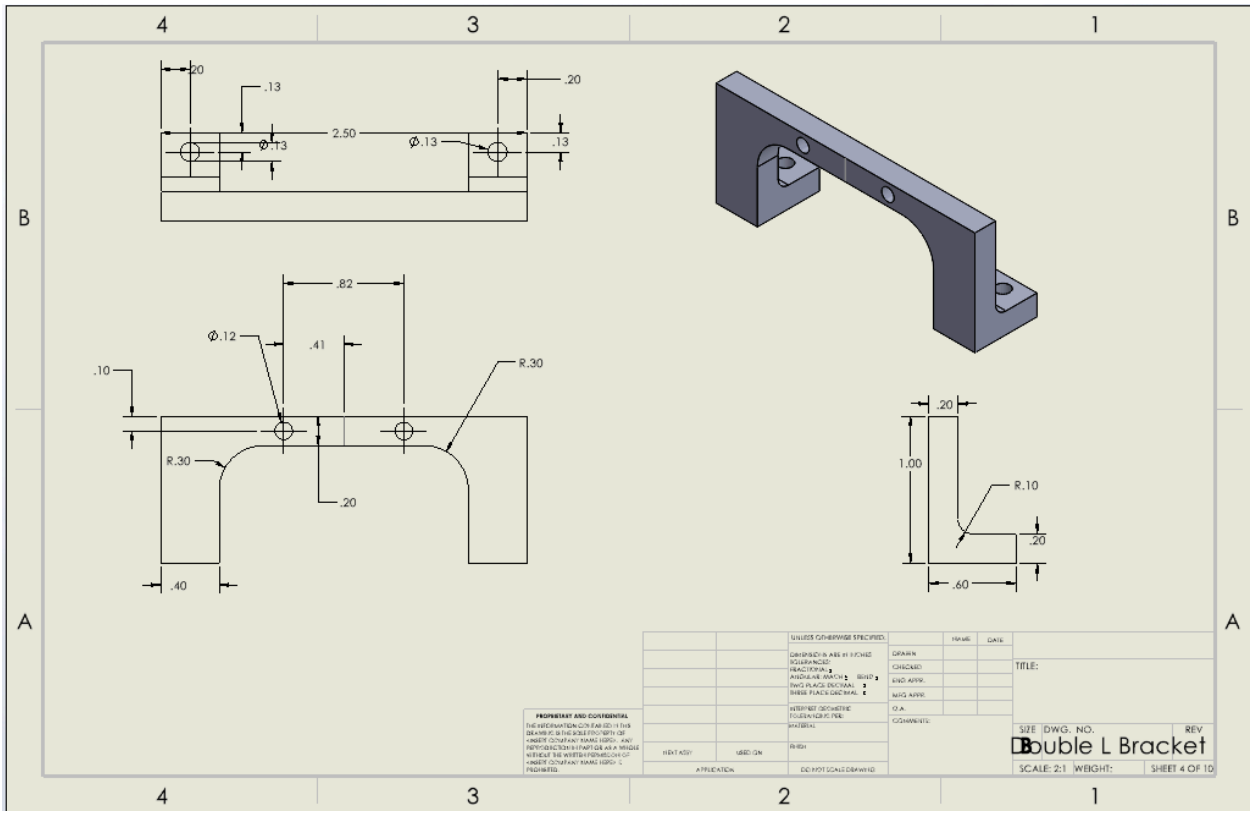
.20
.13
.20
2.50
Ø.13
Ø.13
.13
.82
Ø.12
.41
.10
R.30
R.30
.20
.40
.20
1.00
R.10
.20
.60
UNLESS OTHERWISE SPECIFIED:
DRAWN
CHECKED
ENG APPR.
MFG APPR.
Q.A.
COMMENTS:
TITLE:
PROPRIETARY AND CONFIDENTIAL
NEXT ASSY
USED ON
APPLICATION
DO NOT SCALE DRAWING
SIZE
DWG. NO.
REV
Double L Bracket
SCALE: 2:1
WEIGHT:
SHEET 4 OF 10

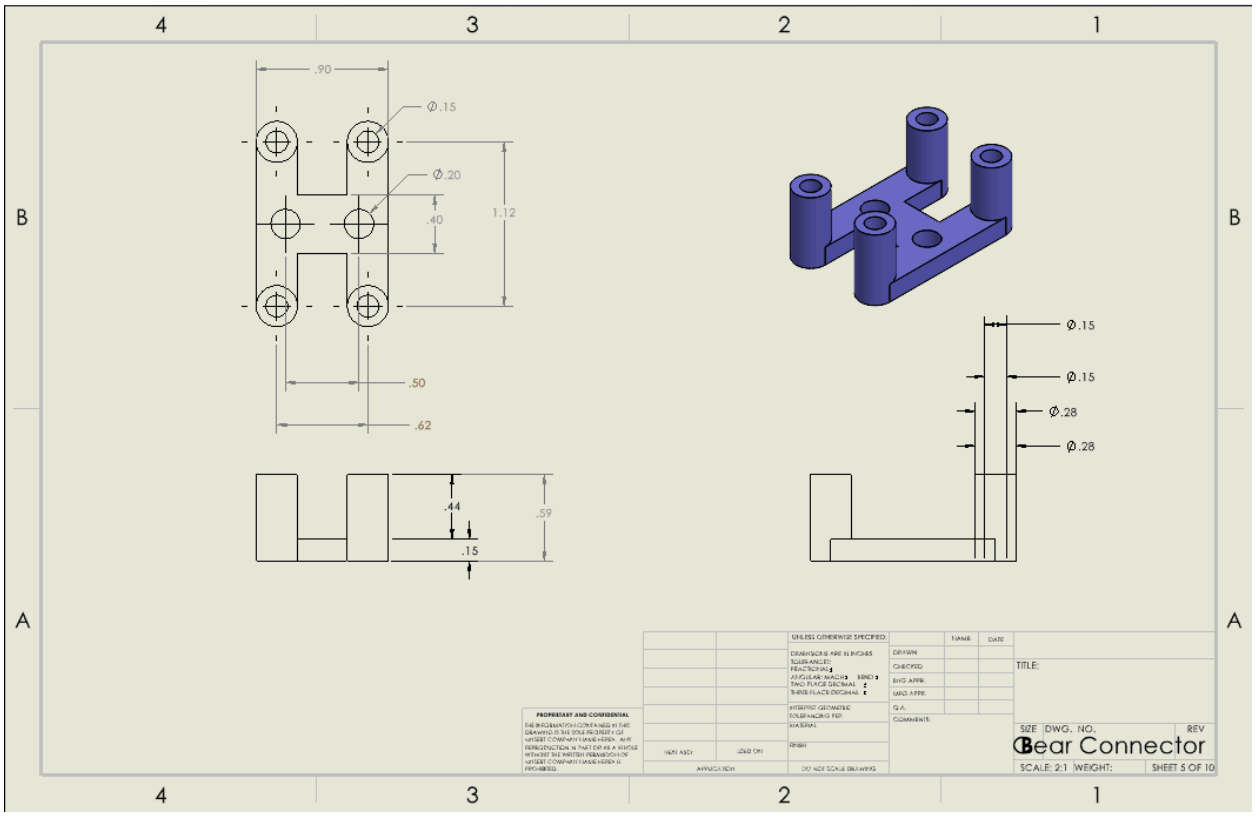
.90
Ø.15
Ø.20
.40
1.12
.50
.62
.44
.59
.15
Ø.15
Ø.15
Ø.28
Ø.28
UNLESS OTHERWISE SPECIFIED:
DRAWN
CHECKED
ENG APPR.
MFG APPR.
Q.A.
COMMENTS:
TITLE:
PROPRIETARY AND CONFIDENTIAL
NEXT ASSY
USED ON
APPLICATION
DO NOT SCALE DRAWING
SIZE
DWG. NO.
REV
Gear Connector
SCALE: 2:1
WEIGHT:
SHEET 5 OF 10

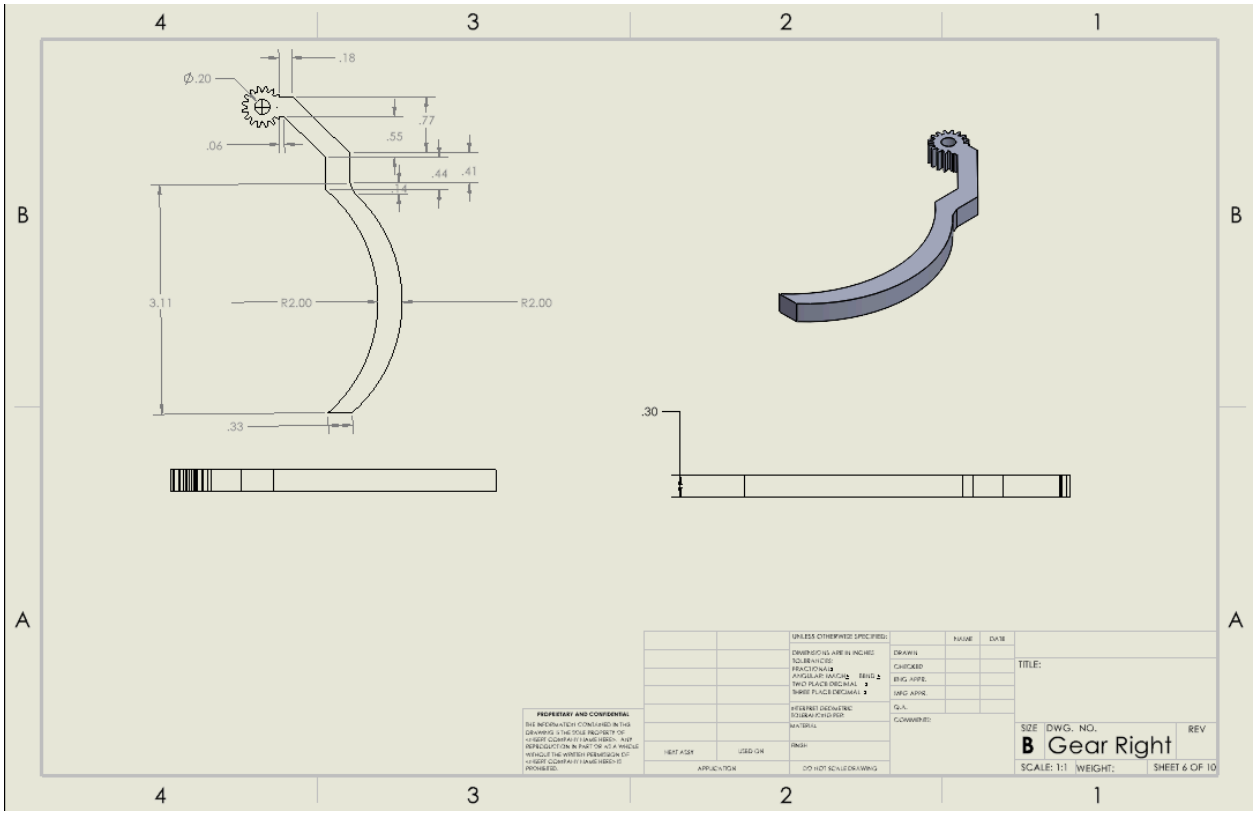
.18
Ø.20
.77
.55
.06
.44
.41
3.11
R2.00
R2.00
.33
.30
UNLESS OTHERWISE SPECIFIED:
DRAWN
CHECKED
ENG APPR.
MFG APPR.
Q.A.
COMMENTS:
TITLE:
PROPRIETARY AND CONFIDENTIAL
NEXT ASSY
USED ON
APPLICATION
DO NOT SCALE DRAWING
SIZE
DWG. NO.
REV
B
Gear Right
SCALE: 1:1
WEIGHT:
SHEET 6 OF 10

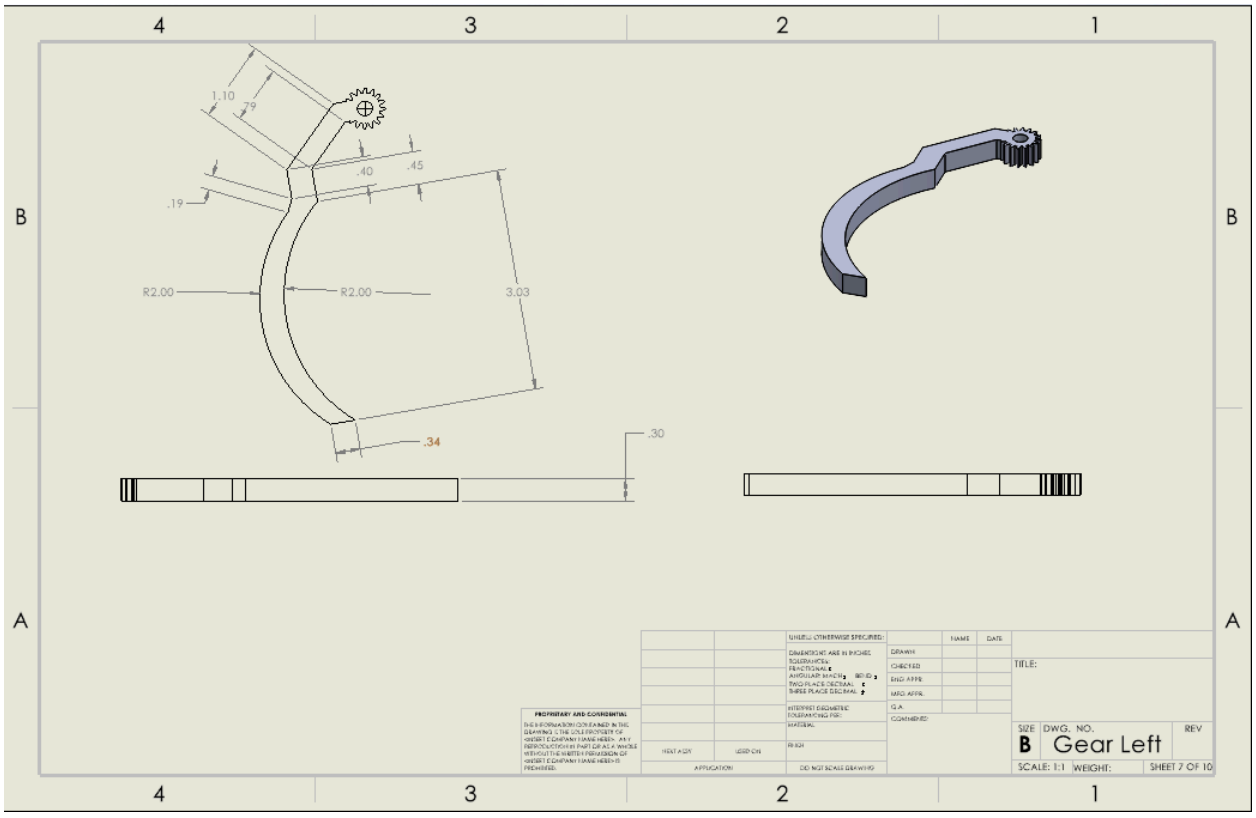
1.10
.79
.40
.45
.19
R2.00
R2.00
3.03
.34
.30
UNLESS OTHERWISE SPECIFIED:
DIMENSIONS ARE IN INCHES
TOLERANCES:
FRACTIONAL ±
ANGULAR: MACH ± BEND ±
TWO PLACE DECIMAL ±
THREE PLACE DECIMAL ±
INTERPRET GEOMETRIC TOLERANCING PER:
MATERIAL
FINISH
DO NOT SCALE DRAWING
NAME
DATE
DRAWN
CHECKED
ENG APPR.
MFG APPR.
Q.A.
COMMENTS:
TITLE:
PROPRIETARY AND CONFIDENTIAL
THE INFORMATION CONTAINED IN THIS DRAWING IS THE SOLE PROPERTY OF <INSERT COMPANY NAME HERE>. ANY REPRODUCTION IN PART OR AS A WHOLE WITHOUT THE WRITTEN PERMISSION OF <INSERT COMPANY NAME HERE> IS PROHIBITED.
HEAT TREAT
LEAD IN
APPLICATION
SIZE
B
DWG. NO.
Gear Left
REV
SCALE: 1:1
WEIGHT:
SHEET 7 OF 10

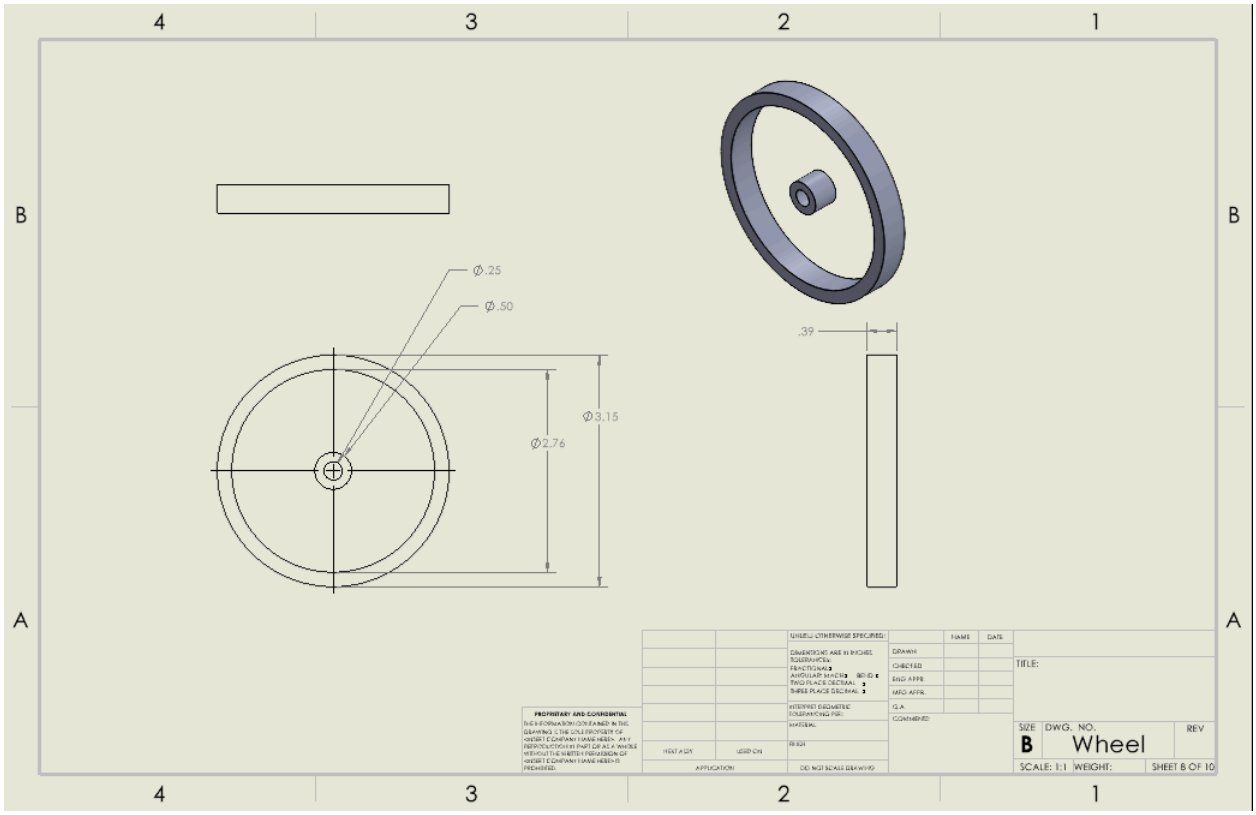
Ø.25
Ø.50
Ø3.15
Ø2.76
.39
UNLESS OTHERWISE SPECIFIED:
DIMENSIONS ARE IN INCHES
TOLERANCES:
FRACTIONAL ±
ANGULAR: MACH ± BEND ±
TWO PLACE DECIMAL ±
THREE PLACE DECIMAL ±
INTERPRET GEOMETRIC TOLERANCING PER:
MATERIAL
FINISH
DO NOT SCALE DRAWING
NAME
DATE
DRAWN
CHECKED
ENG APPR.
MFG APPR.
Q.A.
COMMENTS:
TITLE:
PROPRIETARY AND CONFIDENTIAL
THE INFORMATION CONTAINED IN THIS DRAWING IS THE SOLE PROPERTY OF <INSERT COMPANY NAME HERE>. ANY REPRODUCTION IN PART OR AS A WHOLE WITHOUT THE WRITTEN PERMISSION OF <INSERT COMPANY NAME HERE> IS PROHIBITED.
HEAT TREAT
LEAD IN
APPLICATION
SIZE
B
DWG. NO.
Wheel
REV
SCALE: 1:1
WEIGHT:
SHEET 8 OF 10

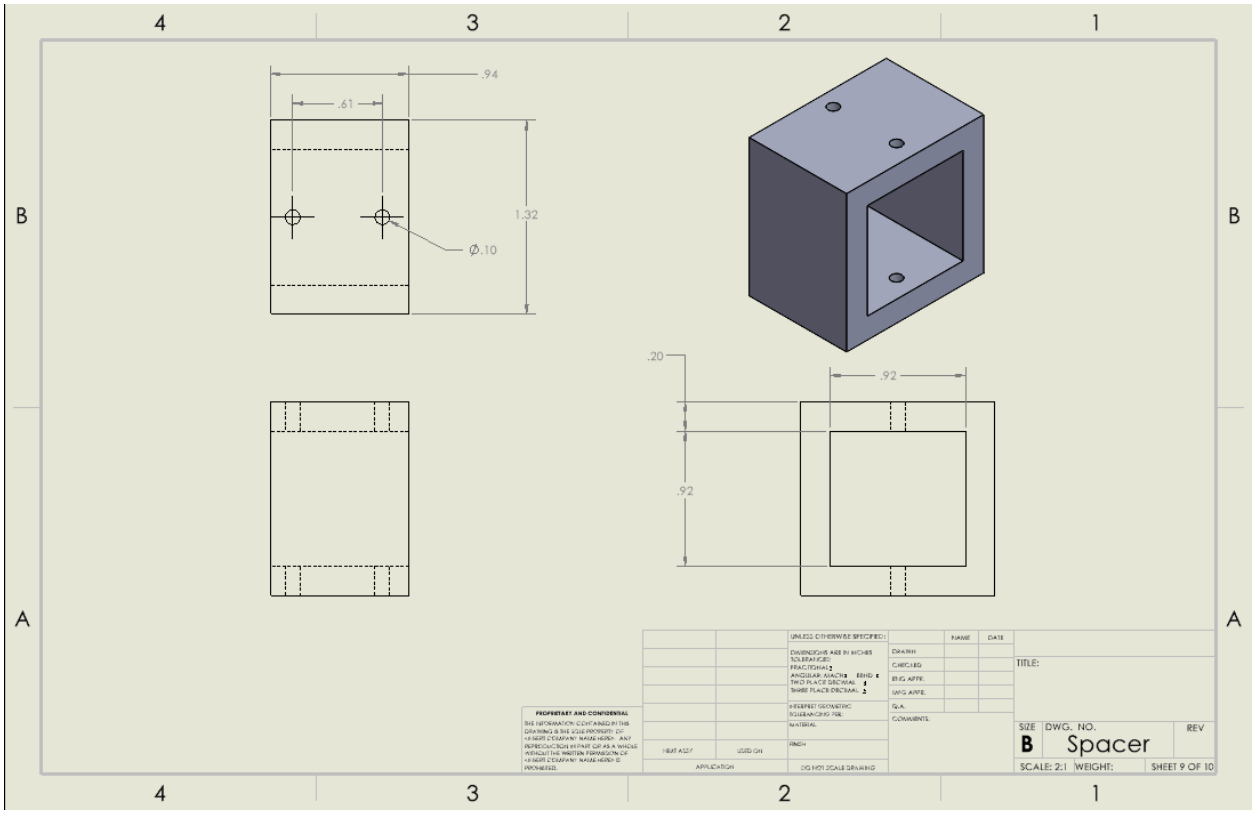
.94
.61
1.32
Ø.10
.20
.92
.92
UNLESS OTHERWISE SPECIFIED:
DRAWN
CHECKED
ENG APPR.
MFG APPR.
Q.A.
COMMENTS:
NAME
DATE
TITLE:
PROPRIETARY AND CONFIDENTIAL
DO NOT SCALE DRAWING
SIZE
B
DWG. NO.
Spacer
REV
SCALE: 2:1
WEIGHT:
SHEET 9 OF 10

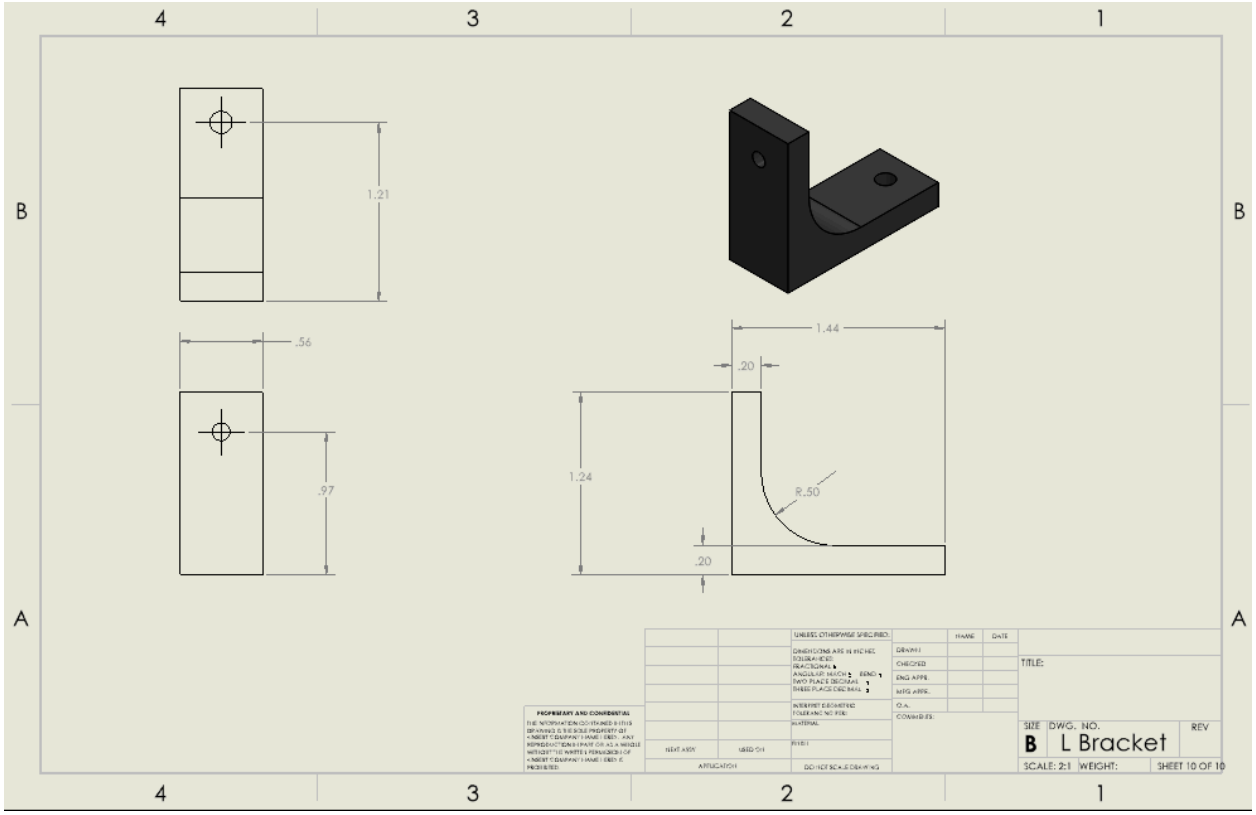
1.21
.56
.97
1.44
.20
1.24
R.50
.20
UNLESS OTHERWISE SPECIFIED:
DRAWN
CHECKED
ENG APPR.
MFG APPR.
Q.A.
COMMENTS:
NAME
DATE
TITLE:
PROPRIETARY AND CONFIDENTIAL
DO NOT SCALE DRAWING
SIZE
B
DWG. NO.
L Bracket
REV
SCALE: 2:1
WEIGHT:
SHEET 10 OF 10