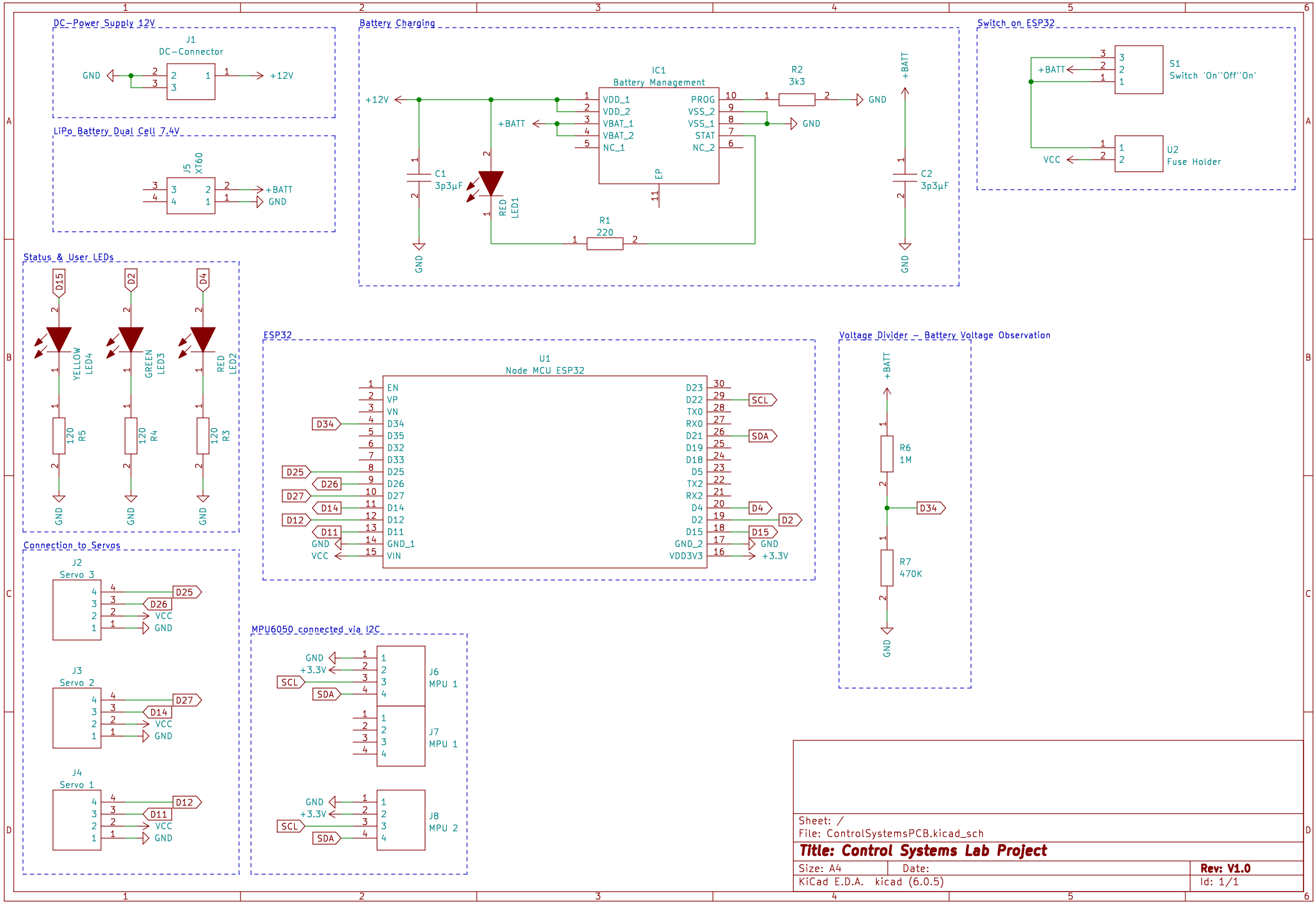
DC-Power Supply 12V
J1
DC-Connector
GND
+12V
LiPo Battery Dual Cell 7.4V
J5
XT60
+BATT
GND
Battery Charging
IC1
Battery Management
VDD_1
VDD_2
VBAT_1
VBAT_2
NC_1
PROG
VSS_2
VSS_1
STAT
NC_2
EP
R2
3k3
R1
220
C1
3p3µF
C2
3p3µF
RED
LED1
Switch on ESP32
S1
Switch 'On''Off''On'
U2
Fuse Holder
VCC
Status & User LEDs
D15
D2
D4
YELLOW
LED4
GREEN
LED3
RED
LED2
120
R5
120
R4
120
R3
ESP32
U1
Node MCU ESP32
EN
VP
VN
D34
D35
D32
D33
D25
D26
D27
D14
D12
D11
GND_1
VIN
D23
D22
TX0
RX0
D21
D19
D18
D5
TX2
RX2
D4
D2
D15
GND_2
VDD3V3
SCL
SDA
+3.3V
Voltage Divider – Battery Voltage Observation
R6
1M
R7
470K
Connection to Servos
J2
Servo 3
J3
Servo 2
J4
Servo 1
MPU6050 connected via I2C
J6
MPU 1
J7
MPU 1
J8
MPU 2
Sheet: /
File: ControlSystemsPCB.kicad_sch
Title: Control Systems Lab Project
Size: A4
Date:
Rev: V1.0
KiCad E.D.A. kicad (6.0.5)
Id: 1/1