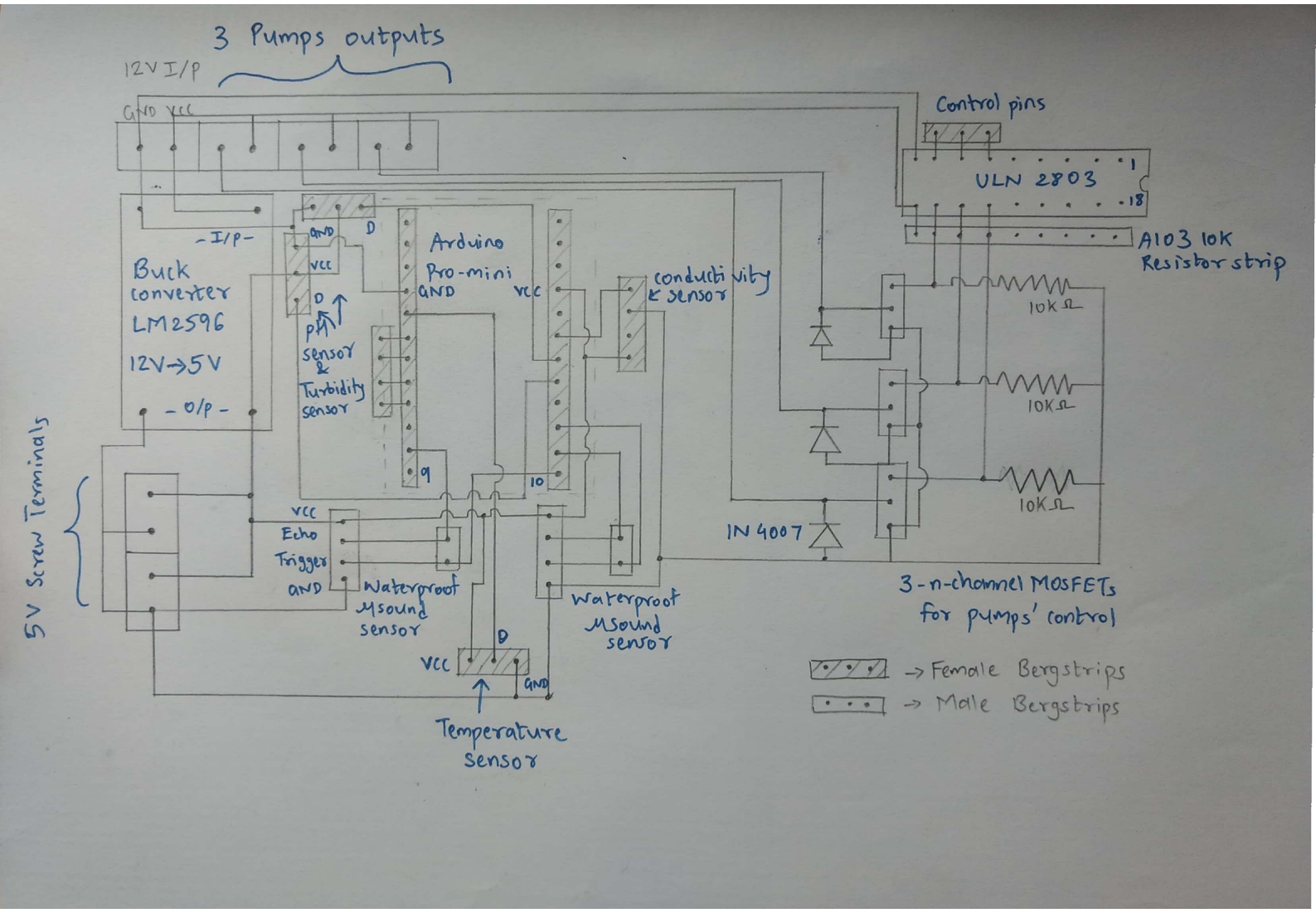

Scanned by CamScanner