8K X 8 BIT LOW POWER CMOS SRAM

FEATURES

- Access time :55ns
- Low power consumption:
  Operation current :
  15mA (TYP.), V_{CC} = 3.0V
  Standby current :
  1μA (TYP.), V_{CC} = 3.0V
- Wide range power supply : 2.7 ~ 5.5V
- Fully Compatible with all Competitors 5V product
- Fully Compatible with all Competitors 3.3V product
- All inputs and outputs TTL compatible
- Fully static operation
- Tri-state output
- Data retention voltage :1.5V (MIN.)
- **All products ROHS Compliant**
- Package : 28-pin 600 mil PDIP
  28-pin 330 mil SOP
  28-pin 8mm x 13.4mm sTSOP

GENERAL DESCRIPTION

The AS6C6264 is a 65,536-bit low power CMOS static random access memory organized as 8,192 words by 8 bits. It is fabricated using very high performance, high reliability CMOS technology. Its standby current is stable within the range of operating temperature.

The AS6C6264 is well designed for low power application, and particularly well suited for battery back-up nonvolatile memory application.

The AS6C6264 operates with wide range power supply.

FUNCTIONAL BLOCK DIAGRAM

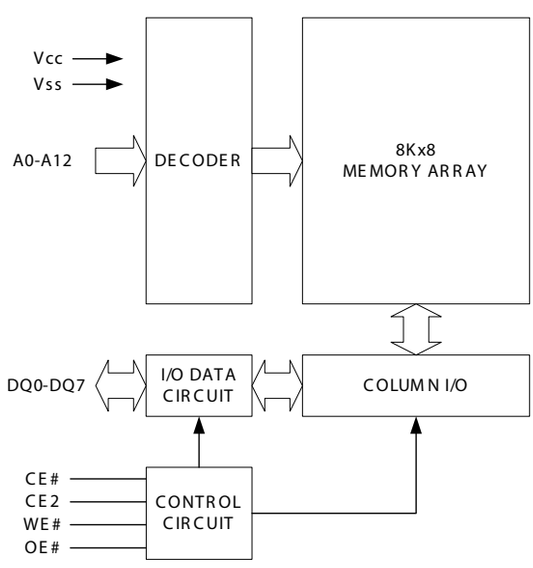

PIN DESCRIPTION

SYMBOL	DESCRIPTION
A0 - A12	Address Inputs
DQ0 – DQ7	Data Inputs/Outputs
CE#, CE2	Chip Enable Inputs
WE#	Write Enable Input
OE#	Output Enable Input
V_{CC}	Power Supply
V_{SS}	Ground
NC	No Connection

PIN CONFIGURATION

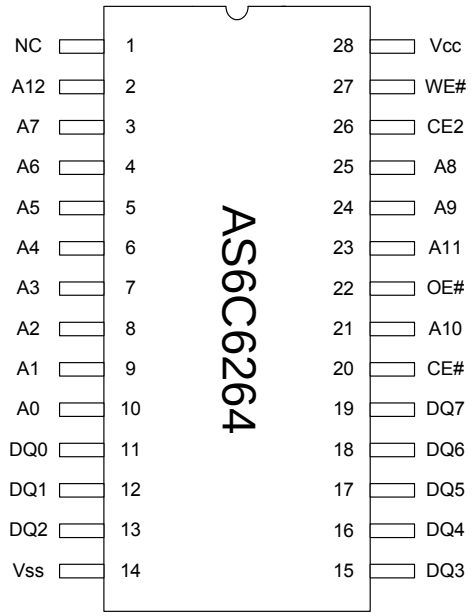

PDIP/SOP

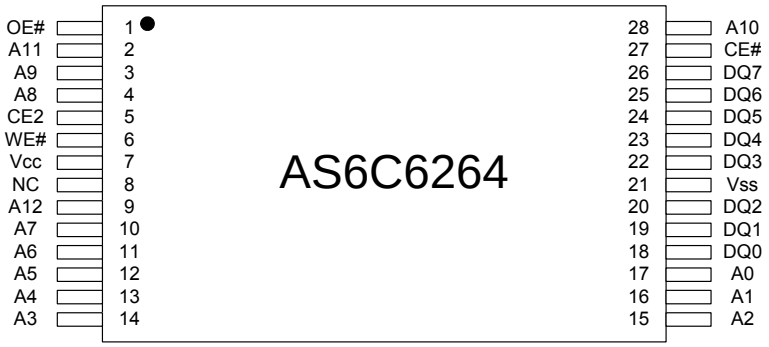

sTSOP

ABSOLUTE MAXIMUM RATINGS*

PARAMETER	SYMBOL	RATING	UNIT
Terminal Voltage with Respect to V_{SS}	V_{TERM}	-0.5 to 7.0	V
Operating Temperature	T_A	0 to 70(C grade)	ºC
		-40 to 85(I grade)	
Storage Temperature	T_{STG}	-65 to 150	ºC
Power Dissipation	P_D	1	W
DC Output Current	I_{OUT}	50	mA
Soldering Temperature (under 10 sec)	T_{SOLDER}	260	ºC

*Stresses greater than those listed under "Absolute Maximum Ratings" may cause permanent damage to the device. This is a stress rating only and functional operation of the device or any other conditions above those indicated in the operational sections of this specification is not implied. Exposure to the absolute maximum rating conditions for extended period may affect device reliability.

TRUTH TABLE

MODE	CE#	CE2	OE#	WE#	I/O OPERATION	SUPPLY CURRENT
Standby	H	X	X	X	High-Z	I_{SB},I_{SB1}
	X	L	X	X	High-Z	I_{SB},I_{SB1}
Output Disable	L	H	H	H	High-Z	I_{CC},I_{CC1}
Read	L	H	L	H	D_{OUT}	I_{CC},I_{CC1}
Write	L	H	X	L	D_{IN}	I_{CC},I_{CC1}

Note: H = V_{IH}, L = V_{IL}, X = Don't care.

DC ELECTRICAL CHARACTERISTICS

PARAMETER	SYMBOL	TEST CONDITION		MIN.	TYP. *5	MAX.	UNIT
Supply Voltage	V_{CC}			2.7	3.0	5.5	V
Input High Voltage	V_{IH} *1			2.4V	-	V_{CC}+0.3	V
Input Low Voltage	V_{IL} *2			- 0.5	-	0.6	V
Input Leakage Current	I_{LI}	$V_{CC} \geqq V_{IN} \geqq V_{SS}$		- 1	-	1	μA
Output Leakage Current	I_{LO}	$V_{CC} \geqq V_{OUT} \geqq V_{SS}$, Output Disabled		- 1	-	1	μA
Output High Voltage	V_{OH}	I_{OH} = -1mA		2.4	3.0	-	V
Output Low Voltage	V_{OL}	I_{OL} = 2mA		-	-	0.4	V
Average Operating Power supply Current	I_{CC}	Cycle time = Min. CE# = V_{IL} and CE2 = V_{IH}, $I_{I/O}$ = 0mA	- 55	-	15	45	mA
	I_{CC1}	Cycle time = 1μs CE#≦0.2V and CE2≧V_{CC}-0.2V, $I_{I/O}$ = 0mA other pins at 0.2V or V_{CC}-0.2V		-	3	10	mA
Standby Power Supply Current	I_{SB1}	CE# ≧ V_{CC}-0.2V or CE2≦0.2V	-C		1	50 *4	μA
			-I	-	1	80 *4	μA

Notes: C = Commercial Temperature I = Industrial temperature
1. V_{IH}(max) =V_{CC} + 3.0V for pulse width less than 10ns.
2. V_{IL}(min) =V_{SS} - 3.0V for pulse width less than 10ns.
3. Over/Undershoot specifications are characterized, not 100% tested.
4. 10μA for special request
5. Typical values are included for reference only and are not guaranteed or tested.
Typical valued are measured at V_{CC} = V_{CC}(TYP.) and T_A = 25°C

CAPACITANCE (T_A = 25°C, f = 1.0MHz)

PARAMETER	SYMBOL	MIN.	MAX	UNIT
Input Capacitance	C_{IN}	-	6	pF
Input/Output Capacitance	$C_{I/O}$	-	8	pF

Note :These parameters are guaranteed by device characterization, but not production tested.

AC TEST CONDITIONS

Input Pulse Levels	0.2V to V_{CC} - 0.2V
Input Rise and Fall Times	3ns
Input and Output Timing Reference Levels	1.5V
Output Load	C_L = 50pF + 1TTL, I_{OH}/I_{OL} = -1mA/2mA

AC ELECTRICAL CHARACTERISTICS

(1) READ CYCLE

PARAMETER	SYM.			AS6C6264-55				UNIT
				MIN.	MAX.			
Read Cycle Time	t_{RC}			55	-			ns
Address Access Time	t_{AA}			-	55			ns
Chip Enable Access Time	t_{ACE}			-	55			ns
Output Enable Access Time	t_{OE}				30			ns
Chip Enable to Output in Low-Z	t_{CLZ}*			10	-			ns
Output Enable to Output in Low-Z	t_{OLZ}*			5	-			ns
Chip Disable to Output in High-Z	t_{CHZ}*			-	20			ns
Output Disable to Output in High-Z	t_{OHZ}*				20			ns
Output Hold from Address Change	t_{OH}			10	-			ns

(2) WRITE CYCLE

PARAMETER	SYM.			AS6C6264-55				UNIT
				MIN.	MAX.			
Write Cycle Time	t_{WC}			55	-			ns
Address Valid to End of Write	t_{AW}			50	-			ns
Chip Enable to End of Write	t_{CW}			50	-			ns
Address Set-up Time	t_{AS}			0	-			ns
Write Pulse Width	t_{WP}			45	-			ns
Write Recovery Time	t_{WR}			0	-			ns
Data to Write Time Overlap	t_{DW}			25	-			ns
Data Hold from End of Write Time	t_{DH}			0	-			ns
Output Active from End of Write	t_{OW}*			5	-			ns
Write to Output in High-Z	t_{WHZ}*			-	20			ns

*These parameters are guaranteed by device characterization, but not production tested.

TIMING WAVEFORMS

READ CYCLE 1 (Address Controlled) (1,2)

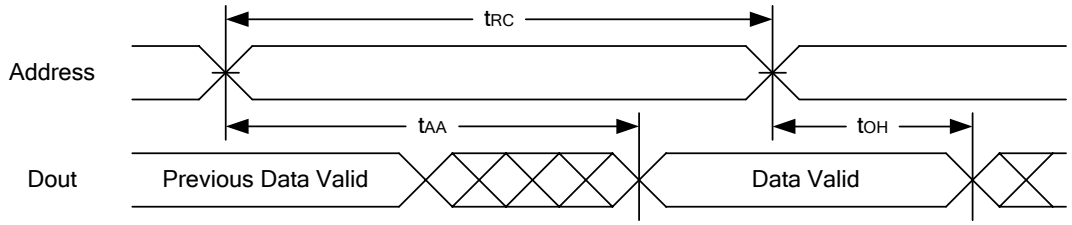

READ CYCLE 2 (CE# and CE2 and OE# Controlled) (1,3,4,5)

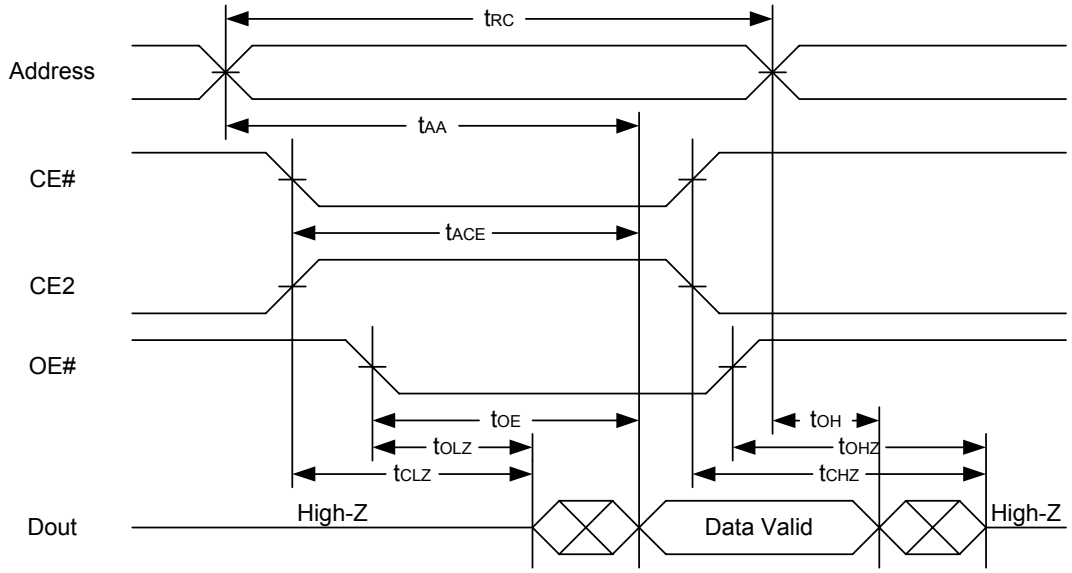

Notes :
1.WE# is high for read cycle.
2.Device is continuously selected OE# = low, CE# = low., CE2 = high.
3.Address must be valid prior to or coincident with CE# = low, CE2 = high; otherwise t_{AA} is the limiting parameter.
4.t_{CLZ}, t_{OLZ}, t_{CHZ} and t_{OHZ} are specified with C_L = 5pF. Transition is measured ±500mV from steady state.
5.At any given temperature and voltage condition, t_{CHZ} is less than t_{CLZ} , t_{OHZ} is less than t_{OLZ}.

WRITE CYCLE 1 (WE# Controlled) (1,2,3,5,6)

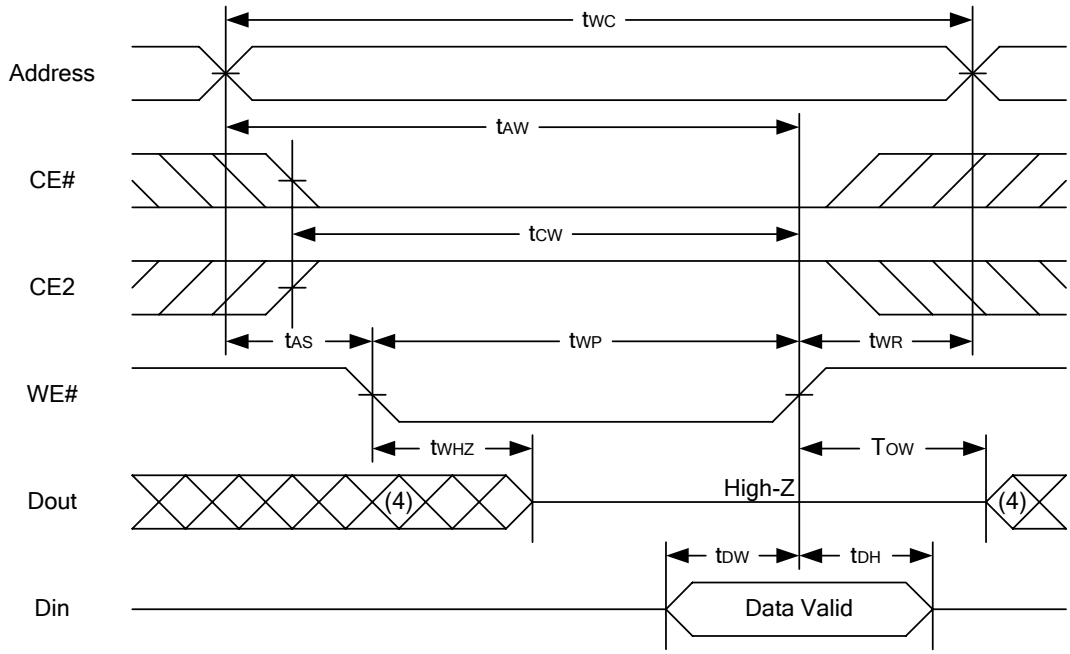

WRITE CYCLE 2 (CE# and CE2 Controlled) (1,2,5,6)

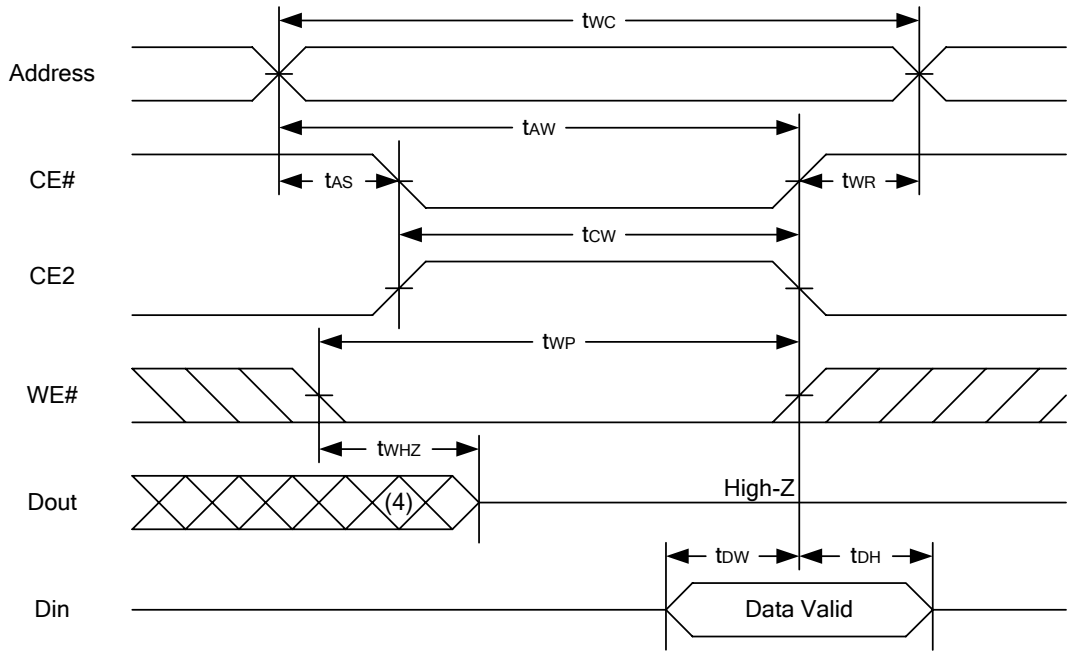

Notes :
1.WE#, CE# must be high or CE2 must be low during all address transitions.
2.A write occurs during the overlap of a low CE#, high CE2, low WE#.
3.During a WE#controlled write cycle with OE# low, t_{WP} must be greater than t_{WHZ} + t_{DW} to allow the drivers to turn off and data to be placed on the bus.
4.During this period, I/O pins are in the output state, and input signals must not be applied.
5.If the CE#low transition and CE2 high transition occurs simultaneously with or after WE# low transition, the outputs remain in a high impedance state.
6.t_{OW} and t_{WHZ} are specified with C_L = 5pF. Transition is measured ±500mV from steady state.

DATA RETENTION CHARACTERISTICS

PARAMETER	SYMBOL	TEST CONDITION	MIN.	TYP.	MAX.	UNIT
V_{CC} for Data Retention	V_{DR}	CE# ≧ V_{CC} - 0.2V or CE2 ≦ 0.2V	1.5	-	5.5	V
Data Retention Current	I_{DR}	V_{CC} = 1.5V CE# ≧ V_{CC} - 0.2V or CE2 ≦ 0.2V	-	0.5	10	μA
Chip Disable to Data Retention Time	t_{CDR}	See Data Retention Waveforms (below)	0	-	-	ns
Recovery Time	t_R		t_{RC*}	-	-	ns

t_{RC*} = Read Cycle Time

DATA RETENTION WAVEFORM

Low Vcc Data Retention Waveform (1) (CE# controlled)

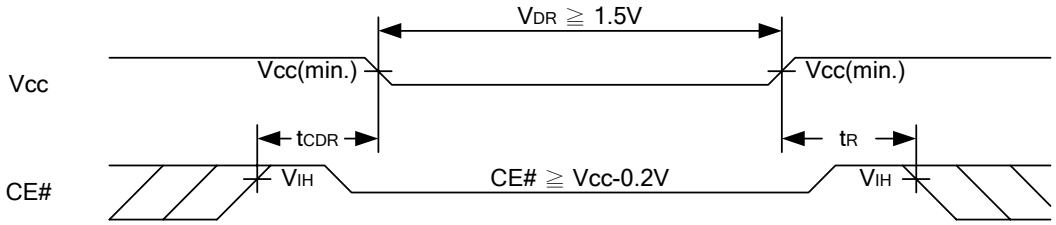

Low Vcc Data Retention Waveform (2) (CE2 controlled)

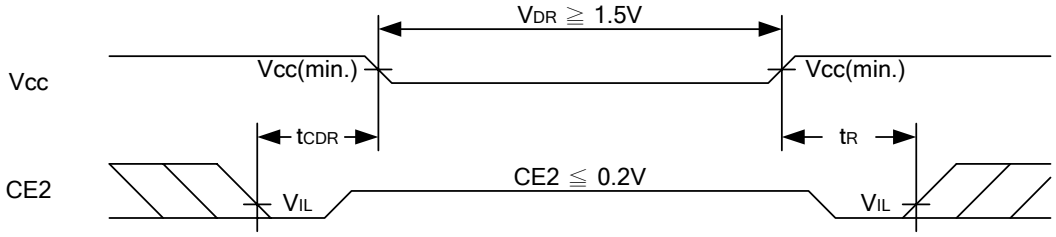

PACKAGE OUTLINE DIMENSION

28 pin 600 mil PDIP Package Outline Dimension

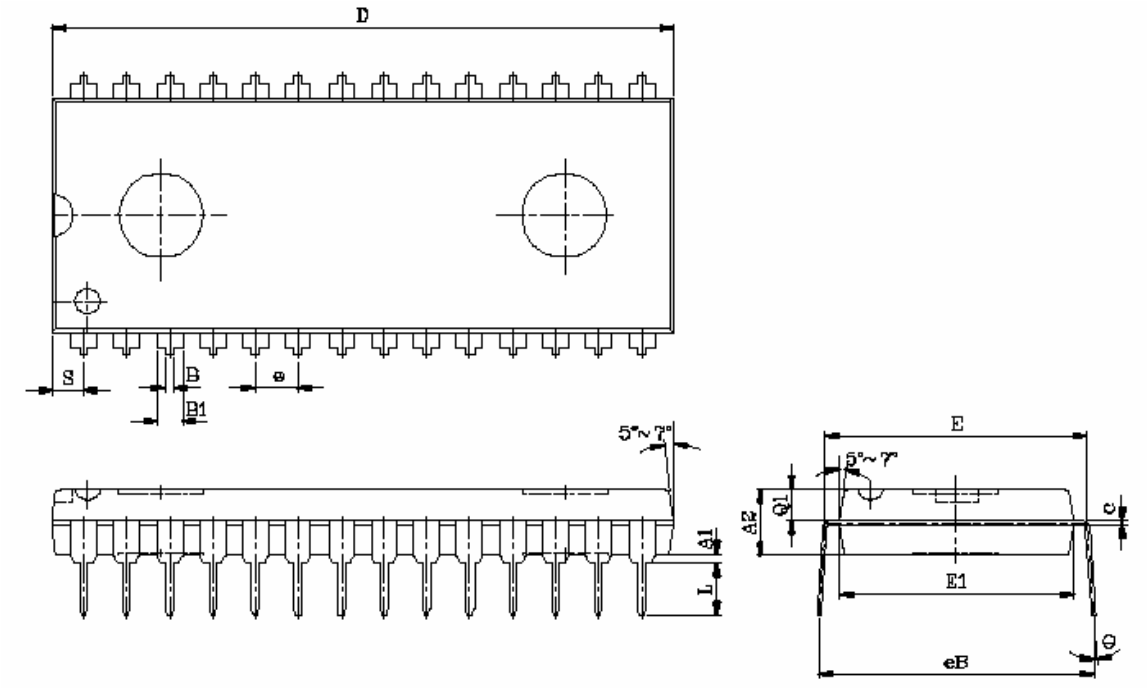

UNIT / SYM.	INCH.(BASE)	MM(REF)
A1	0.010 (MIN)	0.254 (MIN)
A2	0.150±0.005	3.810±0.127
B	0.020 (MAX)	0.508(MAX)
B1	0.055 (MAX)	1.397(MAX)
c	0.012 (MAX)	0.304 (MAX)
D	1.430 (MAX)	36.322 (MAX)
E	0.6 (TYP)	15.24 (TYP)
E1	0.52 (MAX)	13.208 (MAX)
e	0.100 (TYP)	2.540(TYP)
eB	0.625 (MAX)	15.87 (MAX)
L	0.180(MAX)	4.572(MAX)
S	0.06 (MAX)	1.524 (MAX)
Q1	0.08(MAX)	2.032(MAX)
Θ	15^{o}(MAX)	15^{o}(MAX)

28 pin 330 mil SOP Package Outline Dimension

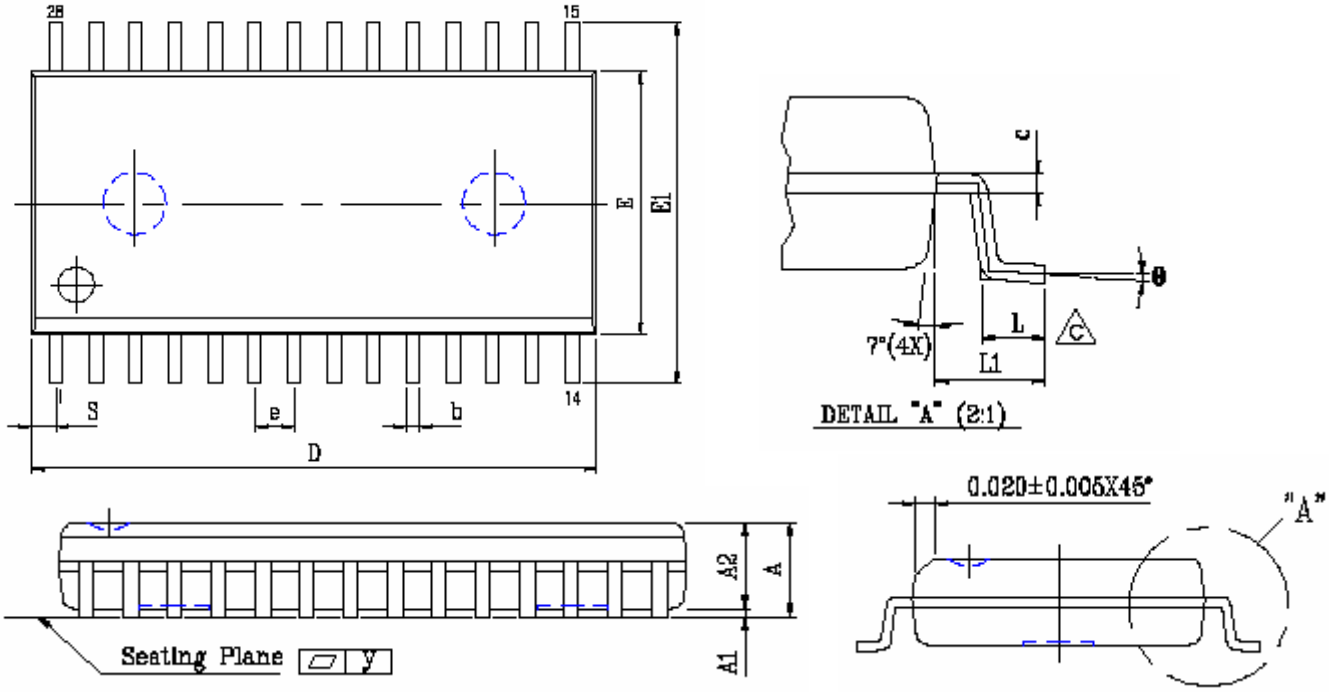

SYM. \ UNIT	INCH(BASE)	MM(REF)
A	0.120 (MAX)	3.048 (MAX)
A1	0.002(MIN)	0.05(MIN)
A2	0.098±0.005	2.489±0.127
b	0.016 (TYP)	0.406(TYP)
c	0.010 (TYP)	0.254(TYP)
D	0.728 (MAX)	18.491 (MAX)
E	0.340 (MAX)	8.636 (MAX)
E1	0.465±0.012	11.811±0.305
e	0.050 (TYP)	1.270(TYP)
L	0.05 (MAX)	1.270 (MAX)
L1	0.067±0.008	1.702 ±0.203
S	0.047 (MAX)	1.194 (MAX)
y	0.003(MAX)	0.076(MAX)
Θ	0°～10°	0°～10°

28 pin 8mm x 13.4mm sTSOP Package Outline Dimension

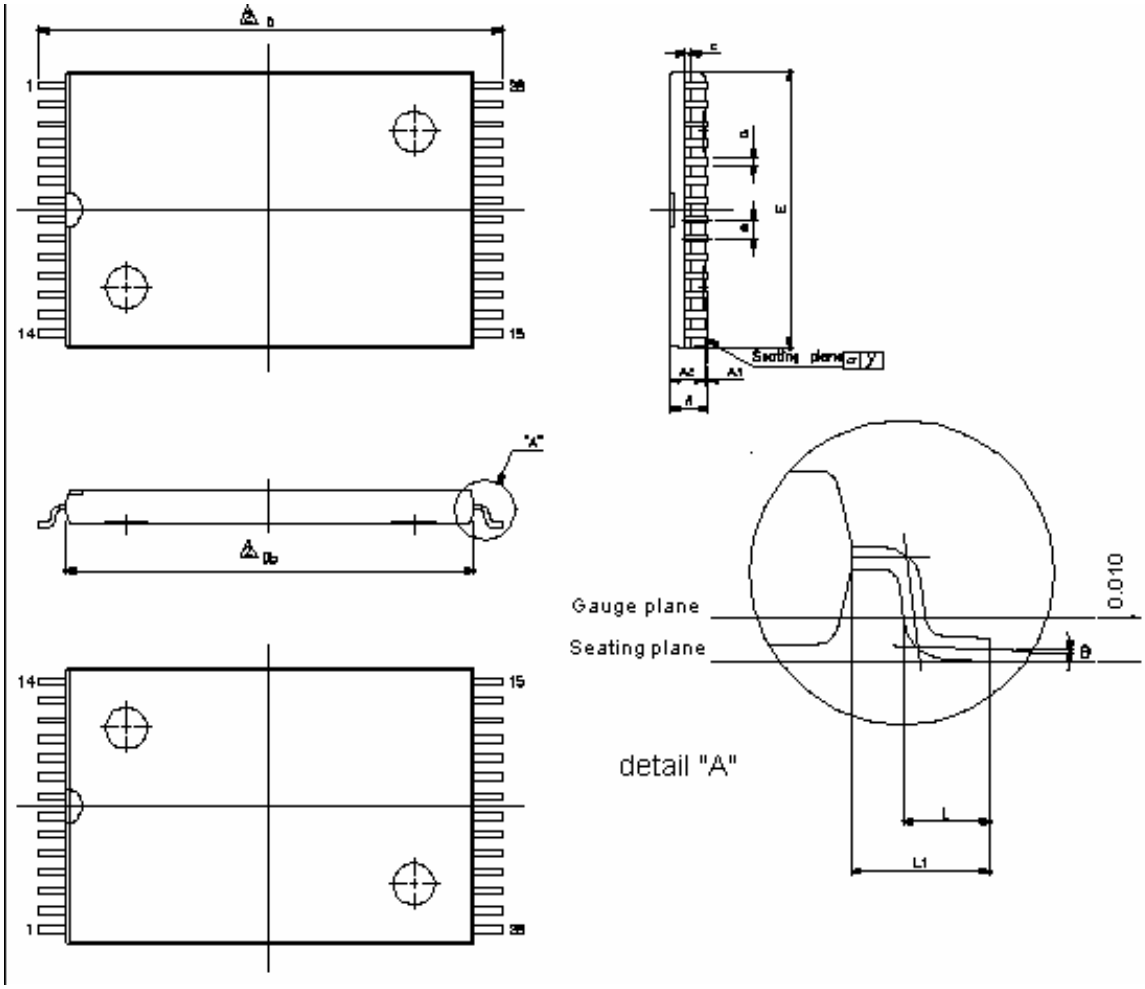

SYM. \ UNIT	INCH(BASE)	MM(REF)
A	0.047 (MAX)	1.20 (MAX)
A1	0.004±0.002	0.10±0.05
A2	0.039±0.002	1.00±0.05
b	0.006 (TYP)	0.15(TYP)
c	0.010 (TYP)	0.254(TYP)
Db	0.465±0.004	11.80±0.10
E	0.315±0.004	8.00±0.10
e	0.022 (TYP)	0.55(TYP)
D	0.528±0.008	13.40±0.20
L	0.020±0.004	0.50±0.10
L1	0.0315±0.004	0.80±0.10
y	0.08(MAX)	0.003(MAX)
Θ	0°～5°	0°～5°

Note：E dimension is not including end flash. The total of both sides' end flash is not above 0.3mm.

ORDERING INFORMATION

Ordering Codes

Alliance	Organization	VCC range	Package	Operating Temp	Speed ns
AS6C6264-55PCN	8k x 8	2.7-5.5V	28pin 600mil PDIP	Commercial ~ 0º C to 70º C	55
AS6C6264-55SCN	8k x 8	2.7-5.5V	28pin 330mil SOP	Commercial ~ 0º C to 70º C	55
AS6C6264-55SIN	8k x 8	2.7-5.5V	28pin 330mil SOP	Industrial ~ -40ºC to 85º C	55
AS6C6264-55STCN	8k x 8	2.7-5.5V	28pin sTSOP (8 x 13.4 mm)	Commercial ~ 0º C to 70º C	55
AS6C6264-55STIN	8k x 8	2.7-5.5V	28pin sTSOP (8 x 13.4 mm)	Industrial ~ -40ºC to 85º C	55

Part numbering system

AS6C	6264	- 55	X	X	N
low power SRAM prefix	Device Number 6264	Access Time	Package Options: P = 28 pin 600 mil P-DIP S = 28 pin 330 mil SOP ST = 28 pin sTSOP (8mm x 13.4 mm)	Temperature Range: C = Commercial (0ºC to +70º C) I = Industrial (-40º to +85º C)	N = Lead Free ROHS Compliant Part

Alliance Memory, Inc.
1116 South Amphlett, #2,
San Mateo, CA 94402
Tel: 650-525-3737
Fax: 650-525-0449
www.alliancememory.com

Copyright © Alliance Memory
All Rights Reserved
Part Number: AS6C6264
Document Version: v. 1.0

© Copyright 2003 Alliance Memory, Inc. All rights reserved. Our three-point logo, our name and Intelliwatt are trademarks or registered trademarks of Alliance. All other brand and product names may be the trademarks of their respective companies. Alliance reserves the right to make changes to this document and its products at any time without notice. Alliance assumes no responsibility for any errors that may appear in this document. The data contained herein represents Alliance's best data and/or estimates at the time of issuance. Alliance reserves the right to change or correct this data at any time, without notice. If the product described herein is under development, significant changes to these specifications are possible. The information in this product data sheet is intended to be general descriptive information for potential customers and users, and is not intended to operate as, or provide, any guarantee or warrantee to any user or customer. Alliance does not assume any responsibility or liability arising out of the application or use of any product described herein, and disclaims any express or implied warranties related to the sale and/or use of Alliance products including liability or warranties related to fitness for a particular purpose, merchantability, or infringement of any intellectual property rights, except as express agreed to in Alliance's Terms and Conditions of Sale (which are available from Alliance). All sales of Alliance products are made exclusively according to Alliance's Terms and Conditions of Sale. The purchase of products from Alliance does not convey a license under any patent rights, copyrights; mask works rights, trademarks, or any other intellectual property rights of Alliance or third parties. Alliance does not authorize its products for use as critical components in life-supporting systems where a malfunction or failure may reasonably be expected to result in significant injury to the user, and the inclusion of Alliance products in such life-supporting systems implies that the manufacturer assumes all risk of such use and agrees to indemnify Alliance against all claims arising from such use.