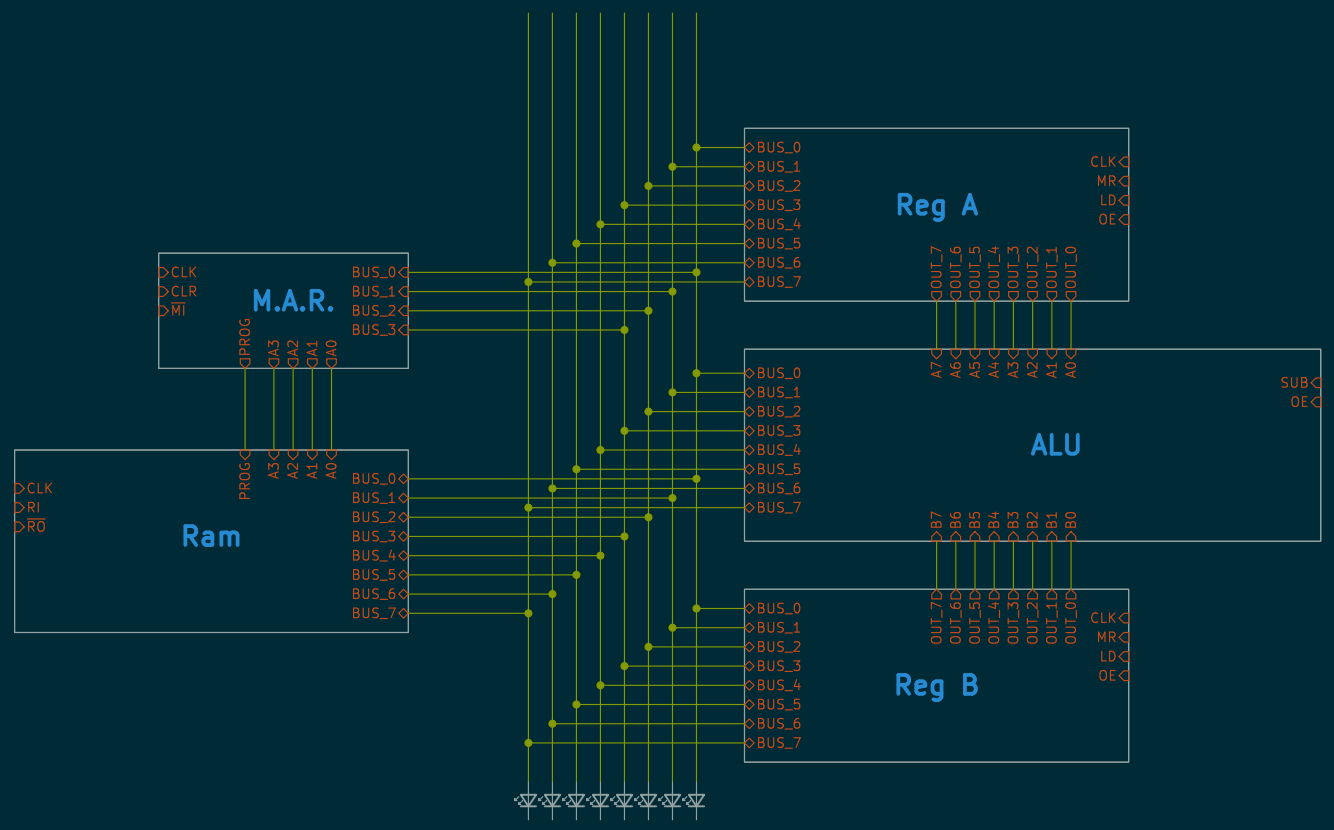

Sheet: /
File: 8-bit-cpu-modules.kicad_sch

Title:

Size: A4	Date:	Rev:
KiCad E.D.A. 9.0.3		Id: 1/6

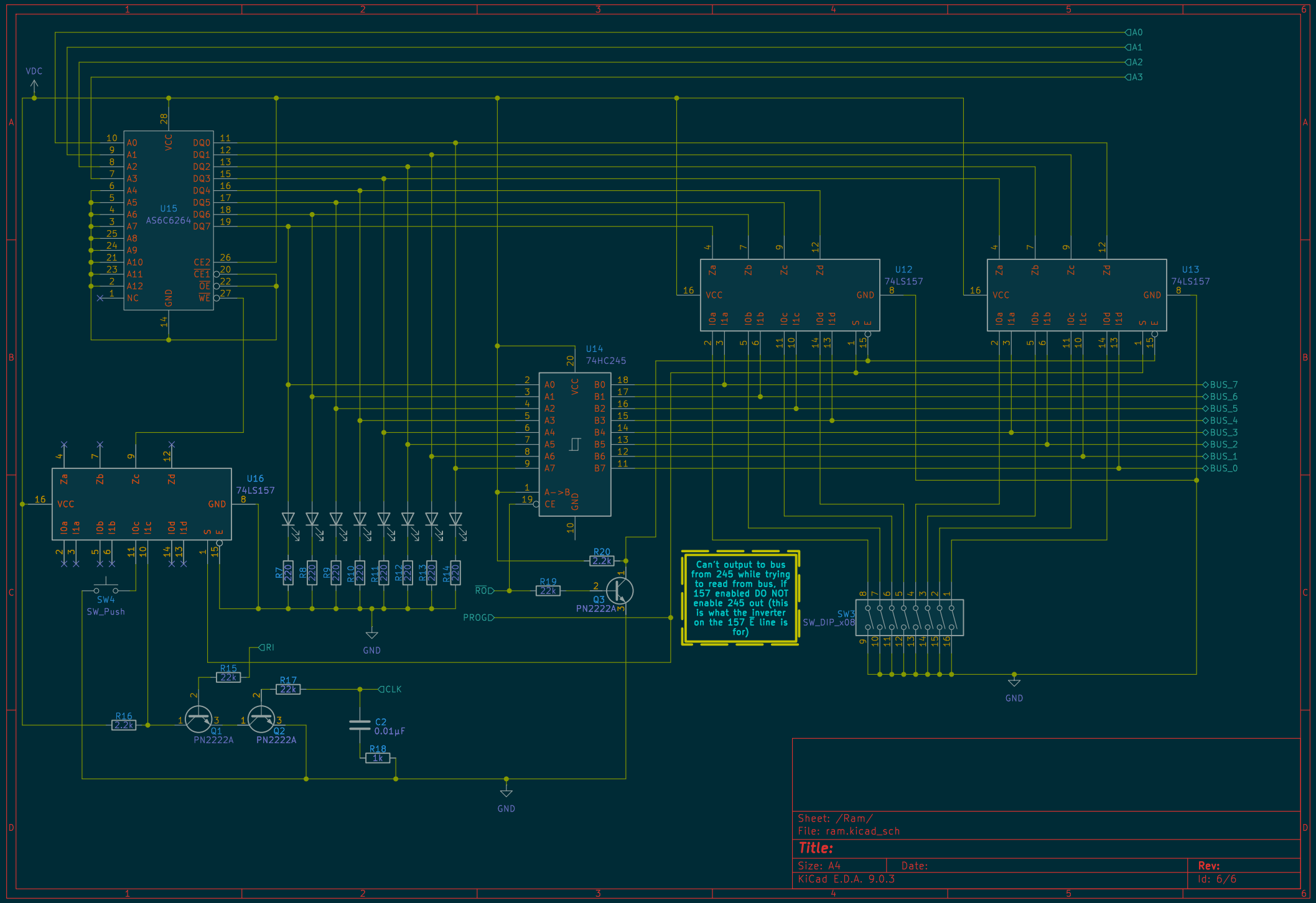
VDC
A0
A1
A2
A3
U15
AS6C6264
U14
74HC245
U12
74LS157
U13
74LS157
U16
74LS157
BUS_7
BUS_6
BUS_5
BUS_4
BUS_3
BUS_2
BUS_1
BUS_0
R7 220
R8 220
R9 220
R10 220
R11 220
R12 220
R13 220
R14 220
R20 2.2k
R19 22k
Q3 PN2222A
ROD
PROG
Can't output to bus from 245 while trying to read from bus, if 157 enabled DO NOT enable 245 out (this is what the inverter on the 157 E line is for)
SW3 SW_DIP_x08
SW4 SW_Push
RI
R15 22k
R17 22k
CLK
R16 2.2k
Q1 PN2222A
Q2 PN2222A
C2 0.01µF
R18 1k
GND
Sheet: /Ram/
File: ram.kicad_sch
Title:
Size: A4
Date:
Rev:
KiCad E.D.A. 9.0.3
Id: 6/6

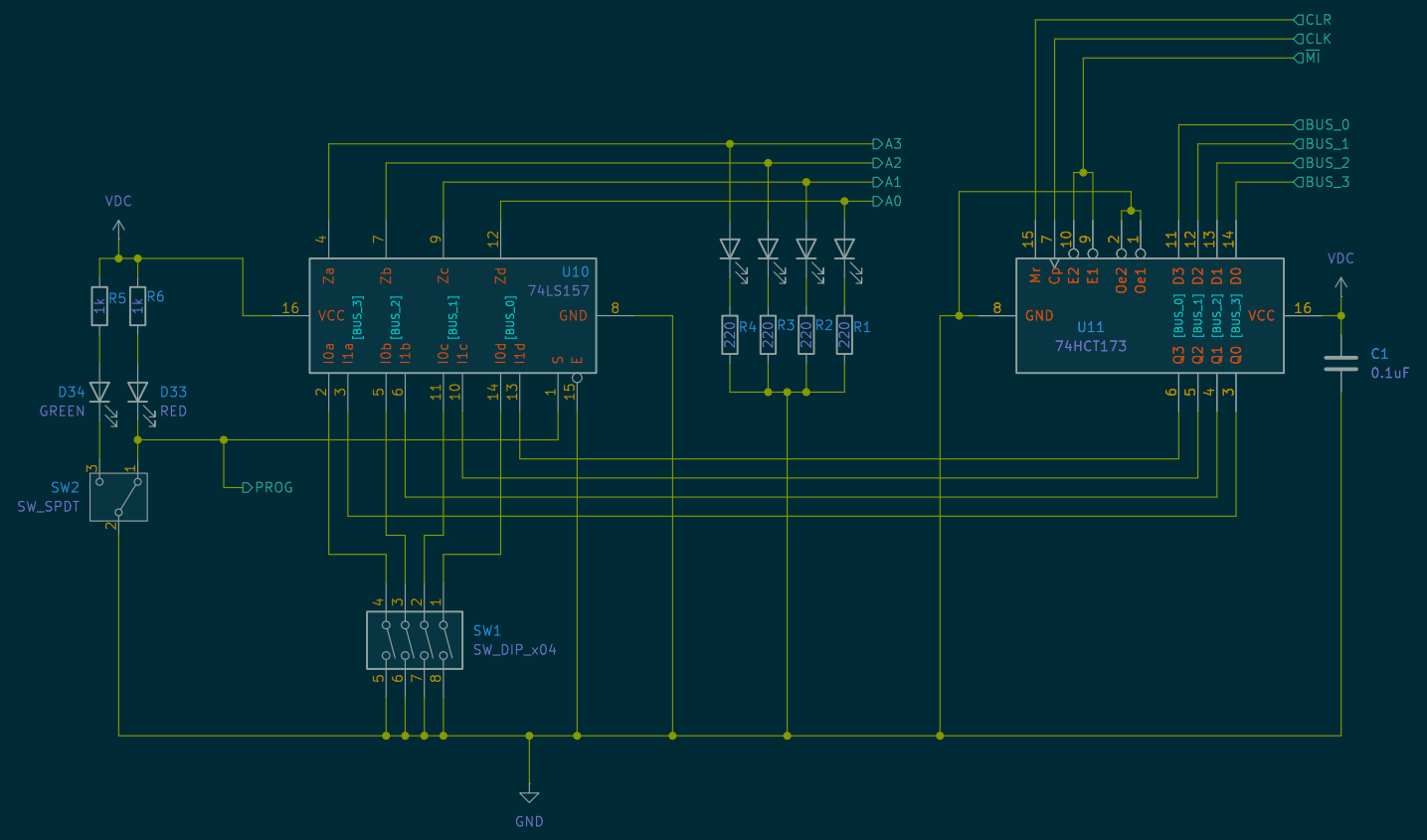

Sheet: /M.A.R./
File: mar.kicad_sch

Title:

Size: A4	Date:	Rev:
KiCad E.D.A. 9.0.3		Id: 5/6

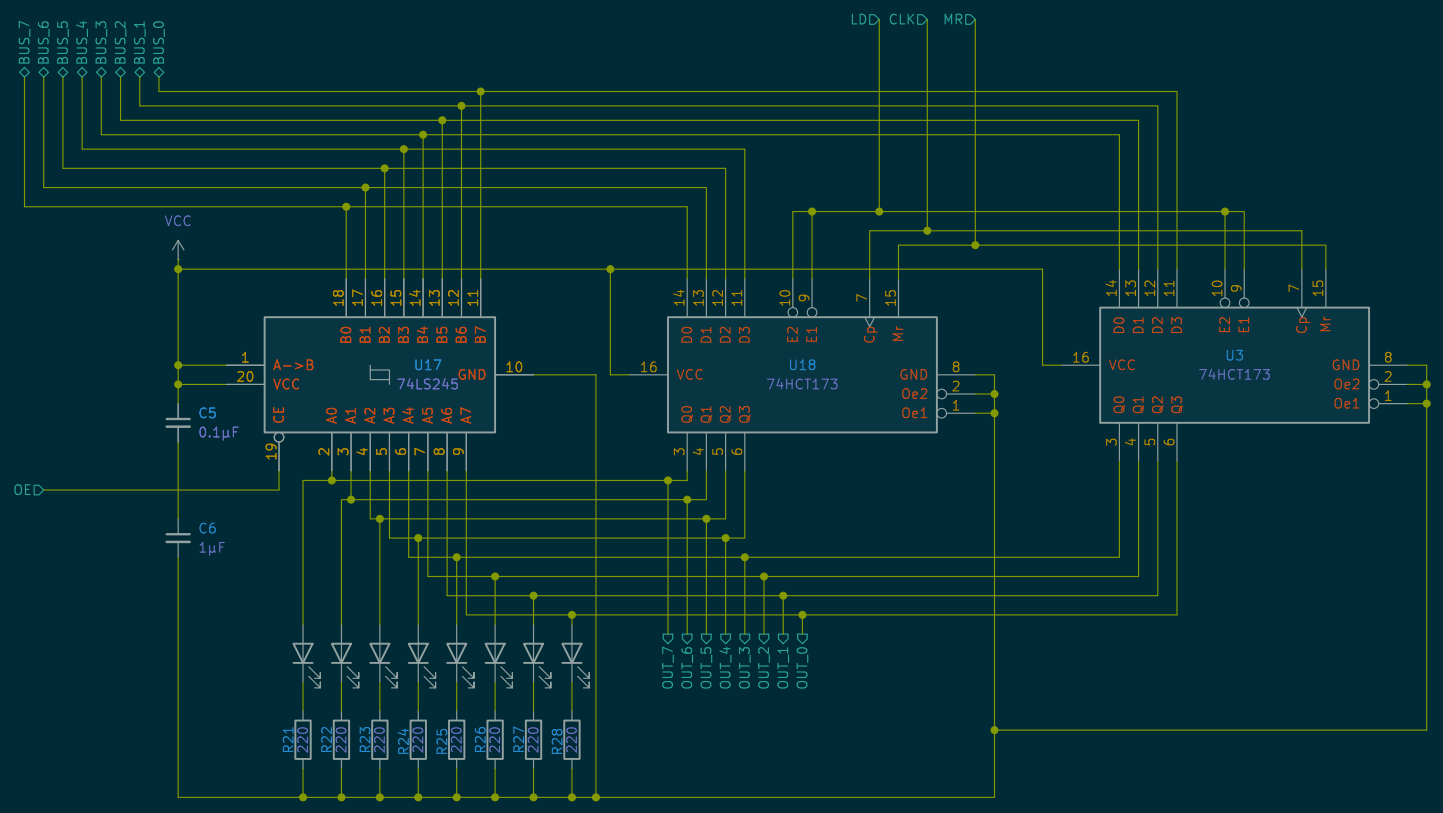

Sheet: /Reg A/
File: reg_a.kicad_sch

Title:

Size: A4	Date:	Rev:
KiCad E.D.A. 9.0.3		Id: 2/6

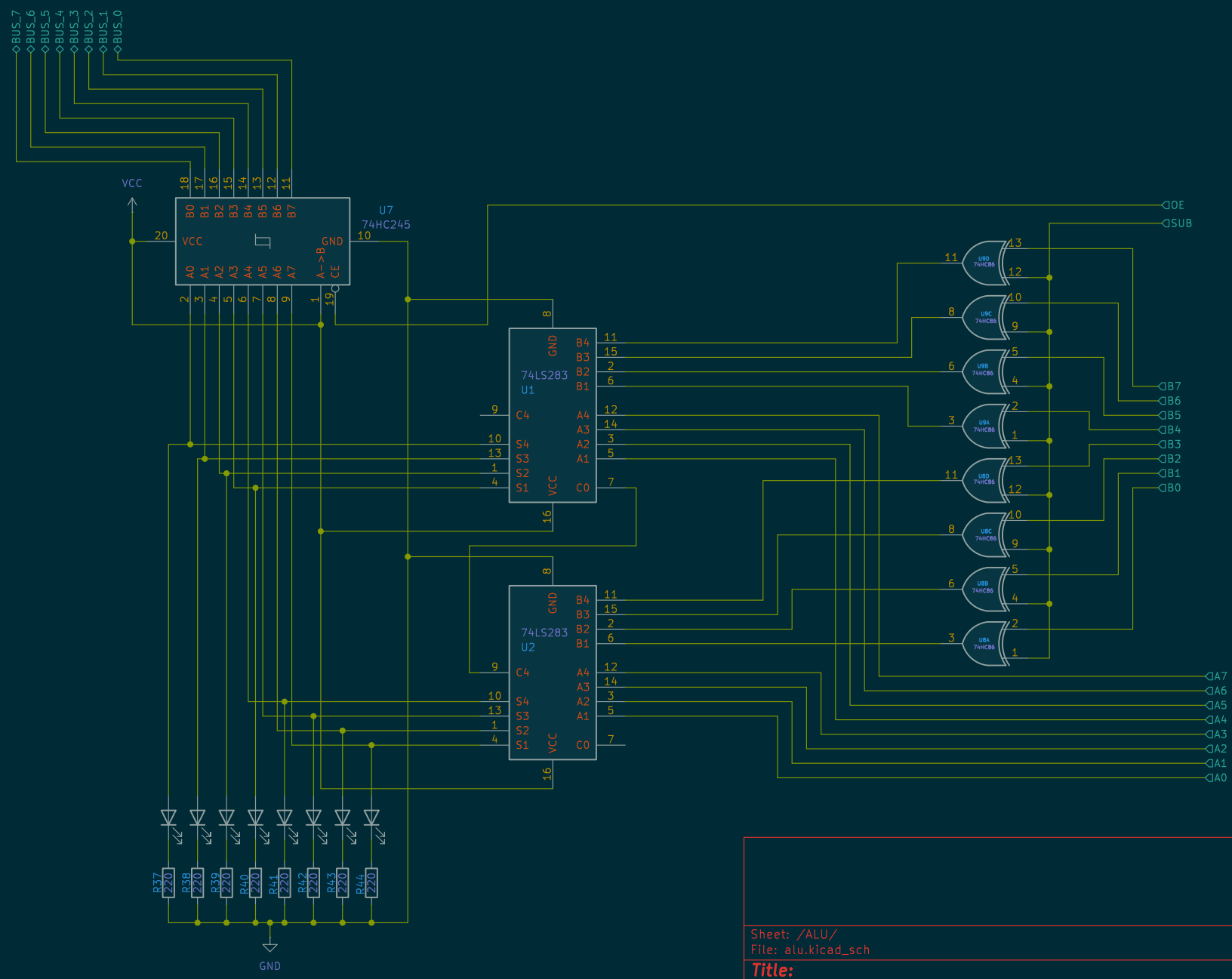

Sheet: /ALU/
File: alu.kicad_sch

Title:

Size: A4	Date:	Rev:
KiCad E.D.A. 9.0.3		Id: 4/6

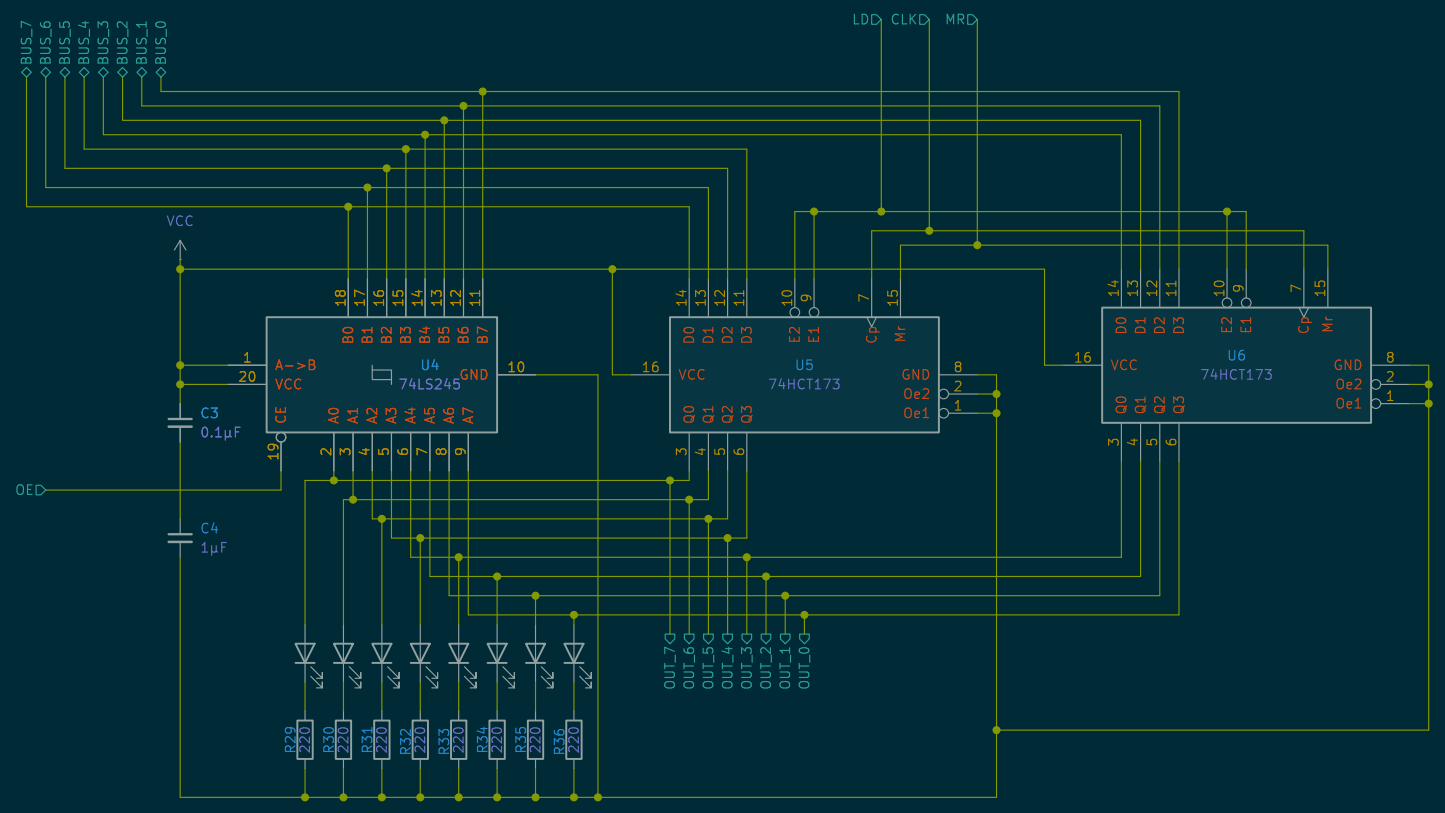

Sheet: /Reg B/
File: reg_a.kicad_sch

Title:

Size: A4	Date:	Rev:
KiCad E.D.A. 9.0.3		Id: 3/6