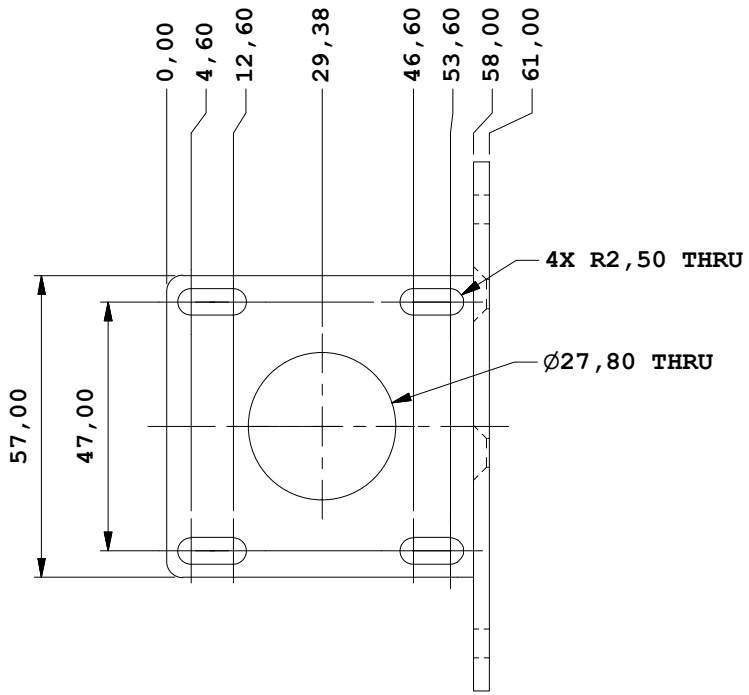

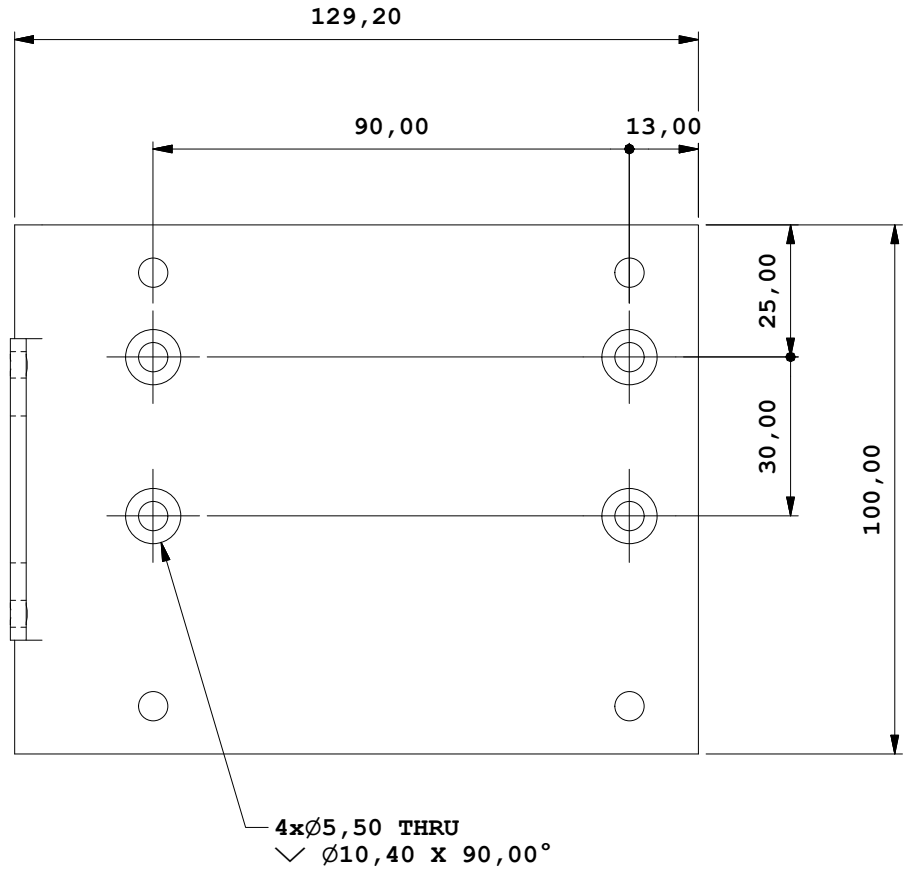

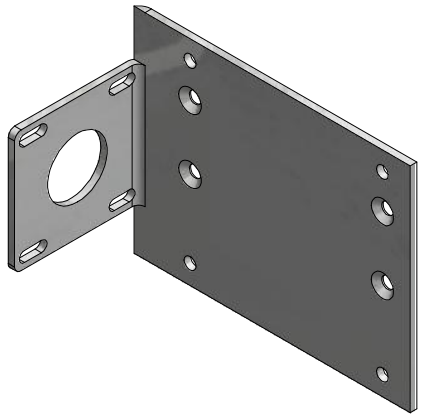

Designed by	Checked by	Approved by	Date	Material	Date	QTY:
Riskinova Oktavia	RIDWAN	RIDWAN		Aluminum	11-Dec-23	1 Pcs

polibatam

BRACKET MOTOR TOP

PBLMK-041-3	Edition	Sheet
		1 / 1